ASSA ABLOY

Opening Solutions

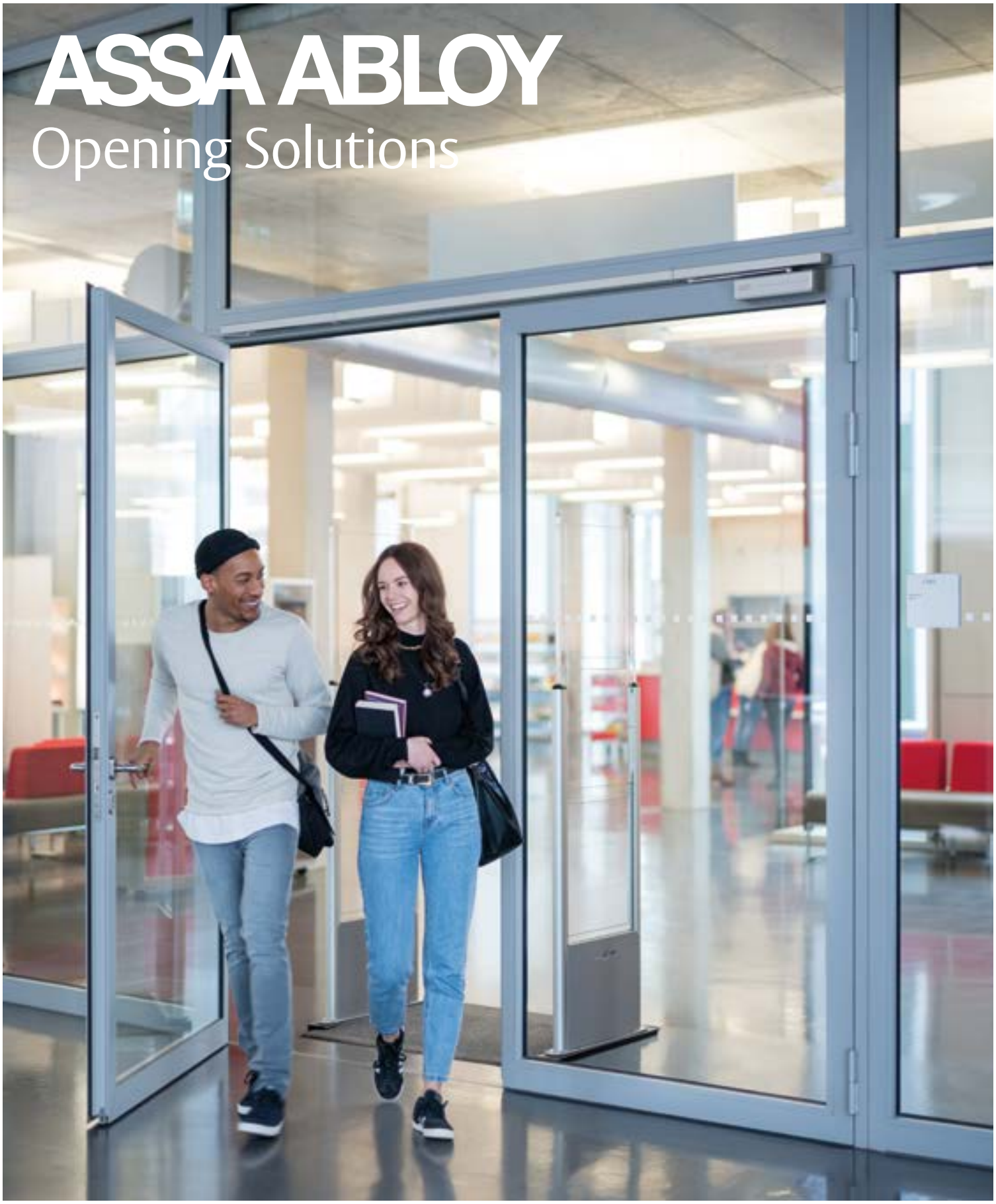

Specification Manual

V1: 2022 - UK&I

Contents

ASSA ABLOY
Opening Solutions

Telephone: +44 (0) 845 223 2124
Enquiries: csdcomm@assaabloy.com
Orders: csdorders@assaabloy.com
Website: www.assaabloy.com
Webshop: Visit **assaabloy.com** and click **Webshop**

4 Introduction

Safety

15 Door controls
16 Introduction
23 Legislation
32 Product selector
37 Rack and pinion
55 Cam-Motion®
61 Solutions range
67 Concealed Cam-Motion®
75 Electromagnetic
99 Transom closers
105 Floor springs
119 Accessories

135 Panic and emergency hardware
136 Introduction
144 Legislation
150 Product selector
157 General panic and emergency hardware
183 Slimline panic and emergency hardware
205 Touch bar panic hardware
225 Touch bar electronic latch retraction hardware
239 High security panic and emergency hardware
269 Paddle handle emergency hardware for use on aluminium doorsets
277 Touch bar panic hardware for use on aluminium doorsets
283 Accessories

293 Hinges
294 Introduction
303 Legislation
306 Product selector
309 Ball bearing butt hinges
317 Bushed bearing hinges
325 Journal supported hinges
337 Specialist hinges

Security

345 Lockcases
346 Introduction
355 Legislation
360 Product selector
369 UK lockcases
407 DIN lockcases
435 Scandinavian lockcases
483 Narrow profile lockcases
495 CE latches and bolts
503 Accessories

519 Cylinders
520 Introduction
532 Legislation
536 Product selector
539 UNION keyPRIME™
551 UNION keyMASTER™
567 P600
589 Triton² 3900
611 Triton² 5900
633 Accessories

639 Electromechanical locking
640 Introduction
644 Legislation
649 Code locks
671 ASSA CLIQ® Remote
683 Electric solenoid bolts
689 Speciality electric locking solutions
705 Electric strikes
729 Electromagnetic locks
763 Electric mortice locks
783 Activation devices and power supplies
795 Accessories

809 Access control
810 Introduction
813 Legislation
815 Incedo™ Business
829 Aperio®
845 SMARTair

Design

861 Door furniture
862 Introduction
865 Legislation
868 Product selector
873 Commercial lever and pull handles
887 Classic range
899 Distinction range
905 ScanFlex range
927 Ruko-Line range
937 High security marine handles
943 Commercial flush bolts
949 Door accessories
957 Product accessories

975 Standards and legislation

Customer support app

Featuring technical support, resource centre, live chat and video call options

Download our customer support app

Together we are

ASSA ABLOY Opening Solutions UK & Ireland part of the ASSA ABLOY Group, the global leader in access solutions. Formed in 1994, the ASSA ABLOY Group has grown to now cover more than 70 countries.

We offer a vast range of hardware, everything from mechanical locks to the latest innovative access control systems. The range covers door controls, fire door safety products, electromechanical access control systems, architectural hardware, panic and exit devices and hands-free solutions.

From the very beginning innovation has defined our direction and enabled us to help billions of people feel safe, secure, and experience a more open world.

Globally we are

51,000 employees

We believe in evolution through people. Developing our team, and growing their careers within ASSA ABLOY, this is how we secure our future success and growth

70+ countries

Our approach is guided by our customers, so we make sure we have teams all over the world dedicated to each market

190+ brands

Our brands give us a strong global presence

9,500 patents

We demonstrate product leadership through innovation. We aim to continuously bring our customers the latest inventions and technology

2,800 employees dedicated to research & development

We strive to encourage positive change within our industry by developing, improving and innovating our peoples skills and our products

Our values

Door hardware is at the core of our business, and we pride ourselves on our tried and tested offering, which covers everything from mechanical locks to the latest access control systems.

Security and loss prevention

Secure your space to feel free. We are dedicated to delivering high-quality door solutions to protect you and your privacy.

Sustainable building solutions

In a fast moving world, efficiency is everything. Swift and secure high-performance solutions reduce energy use and make for a more sustainable world.

Aesthetic design

Frame your space. We aim to provide hardware that will inspire and revitalise your interiors.

Life safety

Safety first. We believe our fire and emergency safety products should demonstrate their compliance through recognised third-party accreditations.

Inclusive design

Ensure your building offers a welcome, not a barrier. Facilitating the involvement of everyone in contemporary life, contributes to a richer, more diverse society.

Core values and beliefs

Empowerment
We have trust in people

Innovation
We have the courage to change

Integrity
We stand up for what's right

Our services

Every building or estate has its own needs. Finding the right product will depend on an extensive range of factors, the intended use of a building and ease of access through it, the level of traffic passing through a building, future development plans, and so on. Whatever you need our range of high-quality support services can help.

Architectural specification

- Help you create compliant and accurate schedules
- Prepare specification briefs and streamline the process to help mitigate potential risk
- Design complete door opening solutions for all applications and security requirements

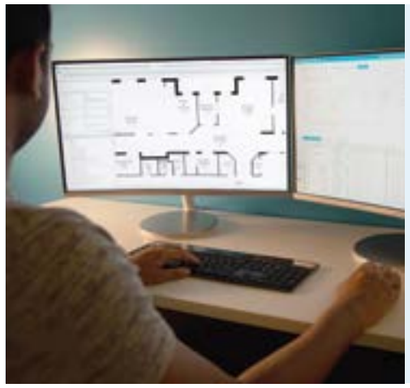

Project management, design and construction

- Complete design service, with thorough analysis of your requirements
- Help you meet day-to-day practical demands of your environment
- Our project consultants translate architectural design and performance expectations into compliant hardware specification

Training courses

- RIBA accredited training provider, catering to individual or combined CPD courses, which architects can earn points towards their annual targets
- We also deliver product training or education programmes tailored to meet your specific needs
- Knowledge and experience sharing to help you with the expertise you will need for a competitive edge

Testing and accreditation

- Integrity, ingenuity, and innovation. Meeting the highest technical standards for testing accreditation
- A custom-built UKAS performance testing laboratory
- Our in house facilities ensure the quality of our products by enabling us to test hardware as it would operate in the built environment

Master keying consultancy

- A suite for every scenario, no matter the size or scale of your site
- Patented protection. Unique features incorporated in the design of the product offers greater protection and allows only authorised suppliers to cut keys
- Enables buildings to satisfy security and access needs with greater control

Service, maintenance and repair

- Complete doorset solutions for end users and facility management companies
- UK wide coverage to make sure we can reach you quickly
- Our maintenance contract incorporates regular inspections, priority calls and discounts that can be applied to our repair work prices

Fire door inspections

- Regular inspections are essential to fully ensure health and safety measures are met
- Digitised fire door inspection software via a mobile app to ensure fire doors are kept compliant and operational, keeping occupants safe
- The identification of any potential issues that could impact building safety and effective product performance
- A detailed report offering advice and recommendations of necessary improvements

Sustainability

Our long-term commitment to science-based targets demonstrates our willingness to lead the industry towards a more sustainable future, and will further improve our competitiveness with sustainable products, solutions and operations.

Innovation

Innovation opens the door to a sustainable future. The market for energy-efficient 'green' buildings is growing, with increased demand for sustainable access solutions. We are leading this transformation to a 'circular economy' where we maximise re-use of resources and minimise waste.

Operations

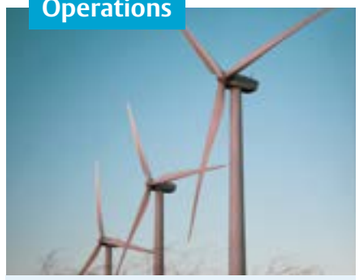

Stepping up our targets to tackle climate change. With a global footprint, we have a global responsibility to do the right thing and play our part to mitigate climate change. And respecting our planet is also true to our purpose: helping people experience a safer and more open world.

Supply chain management

Developing a sustainable supply chain. That means acting in ways that reduce pollution, tackle climate change and raise the bar for fair and safe working conditions.

ASSA ABLOY is an official partner in the WGBC's (World Green Building Council) Europe Regional Network.

Environmental Product Declarations (EPDs) are available for many of our products, which are marked up throughout this manual. The EPD assesses the data of the life-cycle of a product, from production of raw materials right through to the end of building life.

BREEAM® (Building Research Establishment Environmental Assessment Methodology) is one of the world's leading sustainability assessment methods for green building certificates. Our EPD assessments can contribute towards green building certification such as BREEAM. Visit our website for more details of how our products align.

Whole life costing

Our aim is to make sure the door performs as intended from the first day to the last day of use.

Design, construction, and management work hand in hand to make your business better. By understanding the day-to-day demands on a door, the flow of traffic through the building and the planned maintenance and refurbishment of the building, a tailored approach can be adopted.

Our team can support you in understanding the true cost of door opening and how to ensure it safely operates all the time, time after time.

Specifying and installing products which only meet the minimum requirements of a product standard should never be the default position during build stage. The product performance and cost should be evaluated throughout the life of the building, and a long-term approach should always be implemented.

This long-term approach in turn helps to reduce the ongoing carbon footprint of a building ensuing a more sustainable solution.

Door hardware typically accounts for a maximum of 1-2%* of a projects total cost, however if not correctly specified it can account for 30%* of the repair, maintenance and improvement cost in the following years.

*GAI article -https://www.gai.org.uk/GAI/GAI_News/News-Items/2020/Industry-research-sheds-light-on-ironmongery-budget-estimates-.aspx

"Sustainability will be vital to economic and industrial development in the coming decades"

Nico Delvaux, President and CEO, ASSA ABLOY

BIM compliant solution

Our Openings Studio software uses the latest technology to support the design, construction and maintenance of a new building, offering a complete end to end solution. With Openings Studio you can focus on the design; we'll handle all of the details.

Management

Our Openings Studio app is designed to support the critical safety of a building throughout its life cycle. As such it offers crucial benefits to the building owners and operators in achieving the anticipated requirements of the Fire Safety Bill.

- A digitised inspection protocol with schedules, dashboards and action reports
- Demonstrates compliance and provides the building owner/ responsible person with evidence of inspections, actions and corrections
- Offers clear records of the 'Golden thread of Information'

Construction

Our integrated software solution supports the construction phase of a build, making sure that the principals and specification of the design are followed throughout the process.

- Easy identification from RFID chip that retains the ironmongery schedule for a door, including all relevant documentation including DOPs and data sheets providing a true digital thread of information
- Simplifies the handover process with all details stored digitally in one place
- Initiates the maintenance and fire door inspection protocols for the upkeep and compliance of the building

Design

Openings Studio is our industry-leading specification software tool that enhances the process of door hardware scheduling, visualisation and more. It helps to make sure that traffic flows seamlessly through your building whilst giving solutions that are sustainable and legally compliant.

- Award-winning BIM software solution
- Manages your total door solution from hardware and maintenance
- Collaborative project management made seamless
- Integrates with design software such as Autodesk® Revit® and GRAPHISOFT® Archicad®

Openings Studio™

To discuss how we can support the specification process please contact us on 0845 223 2124 or email csdcomm@assaabloy.com

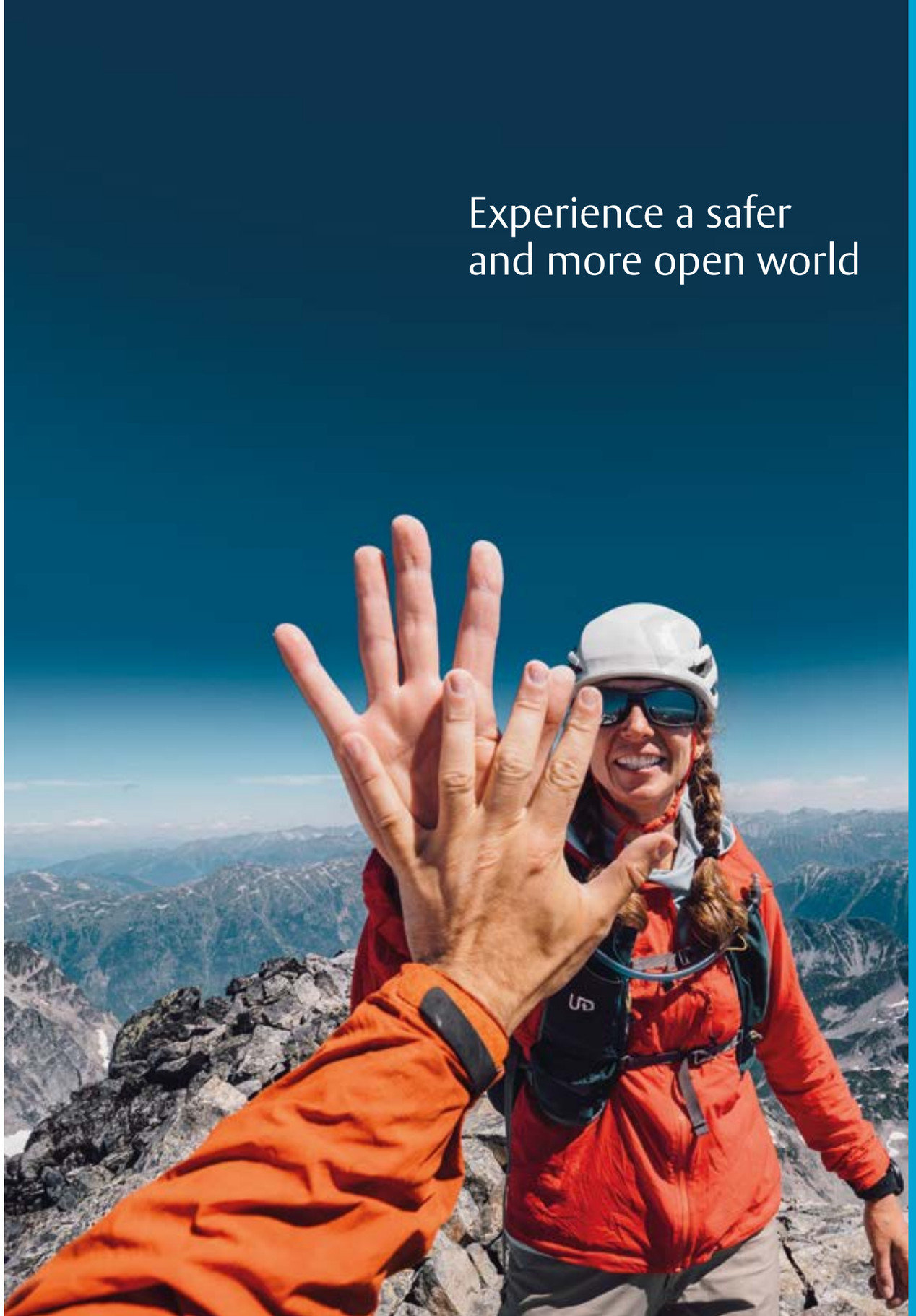

Manual guide

Icons

We have created some simple icons to make features and benefits of a product quickly recognisable.

X YEAR GUARANTEE	The length of product guarantee
XX kg MAX WEIGHT	The maximum door weight
XX kg HOLDING FORCE	The holding force of a product
GRADE X	The certified grade of a hinge
	Suitable for use on timber fire doors
	Suitable for use on metal fire doors
	Helps meet requirements for BS 8300 (access for all)
LPS 1175	Tested and approved to LPS 1175. LPS 1175 is an LPCB certification used to test the resistance to unauthorised access

	The Kitemark is a UK product and service quality trade mark which is owned and operated by the British Standards Institution
MADE IN BRITAIN	The product is made in Britain
certifire	Certifire is an independent third-party passive fire product certification scheme that assures performance, quality, and reliability
CE	The CE mark indicates that the product may be traded freely in any part of the European Economic Area
UK CA	Indicates that the product meets defined British safety standards and may be traded freely in England, Scotland and Wales (Legal requirement from 1st January 2023)
EPD	Environmental Performance Data (EPD). We are committed to measuring and reducing the products environmental impact
Secured by Design SBD	Secured by Design (SBD) is the official police security initiative that works to improve the security of buildings
	MagnaCare® lifetime replacement, no-fault, no questions asked warranty

Standards and legislation are critical in many elements of door hardware. There are guides throughout this manual giving further details of these, please refer to the introduction of each category and to the 'Standards and legislation' section at the end of the manual.

Finishes

Our extensive collection of door hardware comes in a range of finishes to suit the needs of any door or project.

Swatches are provided as a quick reference guide to help with selection, actual finish may vary.

Swatch	Short code	Finish
	AGR	Anthracite grey
	ALU	Aluminium
	ANB	Antique brass
	SA	Satin aluminium
	Black bezel	Black bezel
	BLK	Black
	BNKL	Black nickel
	BZ	Bright zinc
	BZP	Bright zinc plate
	EGALV	Electro galvanized
	GALV	Galvanized
	PB	Polished brass
	PCP	Polished chrome

Swatch	Short code	Finish
	PSS	Polished stainless steel
	SAA	Satin anodised aluminium
	SB	Satin brass
	SC	Satin chrome
	SF	Self colour
	SIL	Silver
	SNP	Satin nickel plated
	SS	Stainless steel
	SSE	Stainless steel effect
	SSS	Satin stainless steel
	Steel	Steel
	White	White
	ZP	Zinc plate

Dimensions

Dimensional drawings in the catalogue are in mm unless otherwise stated.

We are proud to offer an extensive range of products to support the varied needs of any project. If you need further details of any products included in this manual or of other products that we can offer, please don't hesitate to contact us on 0845 223 2124 or email csdcomm@assaabloy.com

Every effort has been made to ensure the accuracy of product information at time of publication in November 2022. We are continually developing our products and reserve the right to change the specification of the products within this manual with or without prior notice. Subject to our Terms and Conditions of trading, a copy of our T's and C's is available upon request. For further help or information, please visit assaabloy.com or call our customer service team.

Door controls

Introduction	16
Legislation	23
Product selector	32
Rack and pinion	37
Cam-Motion®	55
Solutions range	61
Concealed Cam-Motion®	67
Electromagnetic	75
Transom closers	99
Floor springs	105
Accessories	119

Door controls

The purpose of door closers is to close doors in a safe and controlled way. They are a critical factor in the compartmentation of buildings in the event of a fire. As a result, the correct specification, application and maintenance of door closers can help save lives.

Our aim has always been to create door closers that balance design and ease of access while meeting the most stringent standards for peace of mind. We offer the most innovative, compliant and widest range of door controls meaning we have a solution for every application.

Our heritage dates back to the invention of door closers in 1880. Lewis Norton invented a device that controlled the closing of a door by regulating air passing through a chamber. It proved so innovative he formed the Norton Door Closer Company. Twenty years later Norton unveiled the fluid door closer, which replaced air with oil and controlled the spring with adjustable valves. It was an invention that remains fundamentally unchanged to this day.

Norton is one of our group divisions and we have continued to innovate with the same spirit as Lewis Norton. Our experience with door closers started over 80 years ago, we have a history of innovation which is evident through us pioneering the use of alloy bodies, slimline units, non-handed closers, adjustable backcheck, speed adjustment and special application arms.

We're proud to have been at the start of the story of door closers and continue to lead the way today.

The role of a door closer

- **Fire and smoke:** closing mechanisms prevent fire and smoke from escaping and spreading
- **Safety:** controls the door to minimise swinging action and prevent injuries
- **Security:** closes the door for security purposes and privacy
- **Acoustic:** helps to contain sound from inside and outside the door
- **Environmental:** limits heat loss and cold air spreading

Key features

- Tested to EN 1634-1 for use with fire doors
- UKCA / CE marked to EN 1154 in all three configurations
- Electromechanical closers UKCA / CE marked to EN 1155
- BS 8300 compliant, low opening forces for the less able
- Backcheck on most models, prevents damage to the door and its surroundings
- 10 year guarantee on mechanical components
- 2 year guarantee on electromechanical components
- Double door coordinators UKCA / CE marked to EN 1158

Above are key features from our door closer ranges, these may not be relevant to all models.

Parts of a door closer

Trim plate

Cover

Rack and pinion arm

Parallel arm bracket

Guide rail

Considerations for selecting the right door control

Is it a fire door?

To ensure a door closer is suitable for the door type, it is important to understand its scope of certification. Our fire test certification is clearly indicated to illustrate its suitability across timber and metal doors, tests range from 30 to 240 minutes and detail all suitable fixing configurations. For concealed units intumescent kit details are also stated.

What is the door width and weight?

The width and weight of the door dictates what door closer size needs to be used, each closer is tested to comply with the standard EN 1154 to ensure safety and functionality on all doors. Please see table below:

DC power size	Max door width	Max door weight
EN 1	750mm	20kg
EN 2	850mm	40kg
EN 3*	950mm	60kg
EN 4	1100mm	80kg
EN 5	1250mm	100kg
EN 6	1400mm	120kg
EN 7	1600mm	160kg

***Remember**, EN 3 is the minimum requirement for a fire door.

Which way does the door open?

What is the direction of operation – are you pulling or pushing the door to open it? Our fire test certification ensures fixing configurations are clearly highlighted to ensure suitability and coverage on both leaf and frame head (transom) mounting applications.

What type of door closer is required?

A wide range of closers to suit all functionalities, aesthetics and end user preference.

Rack and pinion

These door controls are the most traditional and widest used style; they are supplied complete with a projecting link arm to allow the opening and closing motion, parallel (non-projecting) options are also available.

Cam-Motion®

Cam-Motion® technology provides rapidly decreasing or increasing torque to assist with the closing and opening of doors. They are provided with a guide rail, which sits flush to the frame.

Concealed

Designed not to be seen, whilst still offering class-leading performance across a wide range of applications with high efficiencies and easier opening.

Transom

Concealed in the frame head and traditionally associated with aluminium systems, when fire rated they also offer reliable closing for timber or metal doors. This is particularly beneficial in place of floor springs where a project does not allow for floor mounting.

Floor spring

Floor springs are concealed under the finished floor level to offer control to your door with the unit hidden from view. They are especially suited to areas with high traffic as well as heavier doorsets.

Special solutions

Specialist door closers can provide additional benefits around locking, slamming and also large or more demanding door applications. These products offer additional aspects to support and solve such issues and provide a perfect solution for challenging projects.

What additional functions are required?

Additional features can help ensure your closer is the perfect solution for your door.

Adjustable functions

To fulfil the requirements of EN 1154 all door closers have a closing and latching speed function. Some door closers may also have additional features such as backcheck and closing delay functions.

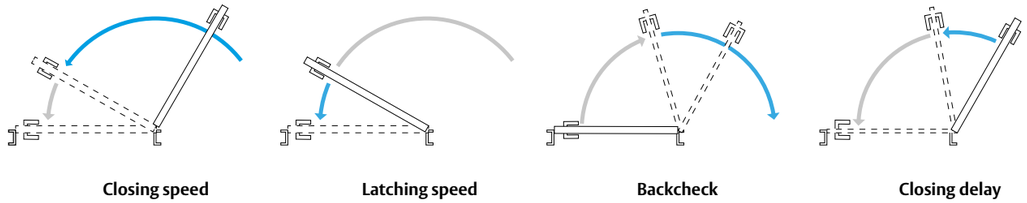

Closing speed: Speed of door leaf during closing cycle from any angle to approx 15°

Latching speed: Speed of door leaf in the final 15° of closing until it reaches its fully closed position. Designed to allow closers to overcome the resistance of a door latch in the last stage of closing without slamming

Backcheck: Opening motion of the door is hydraulically slowed down from an opening angle of about 75°, this can be beneficial on outward opening external doors and internally helps to prevent damage to the surrounding structure and handles

Closing delay: Delay in the closing speed between its maximum opening angle to about 70°, giving you additional time to pass through the doorway

Electromagnetic functions

Electromagnetic door closers include hold-open and free-swing functions which are suitable for building applications with high traffic, or to provide ease of accessibility for the less able. They also help eliminate touch points.

Hold-open: The door is held open at the selected opening angle (beyond 65°), until the power is cut when fire or smoke alarms are triggered, releasing the hold open function and allowing door to close.

Free-swing: The door operates as if there is no door closer present. When the alarm signal is received, the door closer shuts the door regardless of the door position.

Integrated with a fire or smoke alarm, electromagnetic door closers either release the door (hold-open) or allow the door closer to work conventionally (free-swing), closing the door when the alarm is triggered or they are manually released.

TIP

In accordance with building regulations free-swing closers are recommended for use on care home bedroom doors.

The use of free-swing function should be thoroughly considered for applications such as nurseries. Doors with an uncontrolled free-swinging state could be a hazard to small children. For these applications, we recommend a controlled free-swing door closer.

Parts of a transom closer

Transom closers are 'hidden' in the head of the frame and can offer a closing or hold-open solution. Given the diverse range of doorset styles in the market, transom closers are sold as a collection of body and accessories, each specified and ordered separately to achieve the desired result.

Key transom closer accessories:

Body

Armset – side load

Armset – end load

Spindle (various height options)

Bottom pivot

Fixing brackets

Parts of a floor spring

Concealed under the finished floor level with the ability to control single and double action doors, floor springs offer enhanced practicality for certain environments such as high traffic doors, heavier doors or glass doors. In addition to the body, accessories are specified and ordered separately, to give a perfectly tailored solution for each doorset.

Key floor spring accessories:

Body

Cover plate

Spindle (various height options)

Double action fittings

Single action fittings

Cement box

Legislation

CE marking

Fire door closers and doorsets provide fire protection and smoke control. They play a critical role in the compartmentation of buildings, which can help save lives.

Only door closers which are UKCA / CE marked and certified to meet the requirements of EN 1154 are suitable for fire and smoke protection applications. Additional certifications are required for electromagnetic door closers (EN 1155) and for door coordinating devices (EN 1158).

We have UKCA / CE marked door closers suitable for all applications, from our rack and pinion range through to our high performance Cam-Motion® door closers with guide rails, transom closers, floor spring and specialist solutions.

Requirements for the application of CE marking on a door closer:

- Compliance with EN 1154
- Compliance with EN 1155 and/or EN 1158, where applicable
- Evidence of audit testing of the certified product
- Regular factory process control inspections
- Notified independent certification body to provide verification of the compliance claims

Typical CE mark label

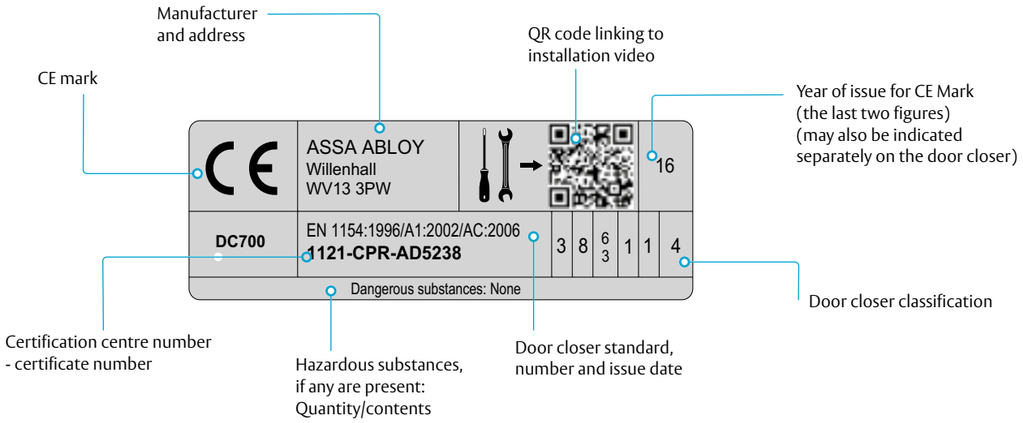

QR codes are an optional feature that we use on ASSA ABLOY products when possible, they also help to achieve regulation 38 compliance with the building regulations.

ASSA ABLOY
Opening Solutions

EN 1154 – Controlled door closing devices

All controlled door closing devices are covered by a harmonised European standard, EN 1154. This standard classifies door closing devices under a 6 digit coding system.

Each digit refers to a particular feature of the product measured against the standard's performance requirements. The classification code can be identified on a product's CE mark label.

EN 1154 classification key

	EN 1154:1996+A1:2002 Grading scope
CATEGORY OF USE Identifies the angle from which the device will close the door in a controlled manner. **Grade 3:** For closing doors from at least 105° open **Grade 4:** For closing doors from 180° open	(3/4)
NUMBER OF TEST CYCLES Only one test duration is identified for door closers manufactured to this standard: **Grade 8:** 500,000 test cycles	(8)
TEST DOOR MASS/SIZE **Seven test door mass grades** and related **door closer power sizes (refer to power size table opposite)** are identified. Where a door closer provides a range of power sizes both the minimum and the maximum sizes shall be identified.	(1-7)
FIRE BEHAVIOUR AND RESISTANCE Having successfully completed a fire test to **EN 1634-1** **Grade 0:** Not suitable for use on fire/smoke door assemblies **Grade 1:** Suitable for use on fire/smoke door assemblies	(0/1)
SAFETY All door closers are required to satisfy the requirement of safety in use. Only **Grade 1** is identified	(1)
CORROSION RESISTANCE Corrosion resistance to **EN 1670** Neutral Salt Spray test and operation of the product at extreme temperatures. **Five grades are identified:** **Grade 0:** No defined corrosion resistance **Grade 1:** Mild resistance **Grade 2:** Moderate resistance **Grade 3:** High resistance **Grade 4:** Very high resistance	(0-4)

Door closer power size

DC power size	Max door width	Max door weight
EN 1	750mm	20kg
EN 2	850mm	40kg
EN 3	950mm	60kg
EN 4	1100mm	80kg
EN 5	1250mm	100kg
EN 6	1400mm	120kg
EN 7	1600mm	160kg

The above power sizes can be applied in three different closer types

1) Fixed – 1 power size only
2) Template – multiple power sizes by moving the closer body along the door face
3) Variable – infinite adjustment within range of sizes

Fixed size closers have 1 digit in the third classification box, template closers list all possible grades in the third classification box, variable closers show the maximum and minimum grades in the third classification box.

ASSA ABLOY
Opening Solutions

EN 1155 – Electrically powered hold-open devices

Closers which are controlled by an electromagnetic function allow doors to be held open as required. In addition to EN 1154, electromagnetic closers must meet the additional requirements of EN 1155.

In the event of a fire, the fire alarm trigger cuts power to the electromagnetic door closer, allowingthe door to close to prevent fire and smoke from spreading. It is this ability to automatically release and shut that makes EN 1155 hold open products safe for use on fire doors where pure mechanical hold-open units cannot be used.

EN 1155 classification key

EN 1155:1997+A1:2002

	Grading scope
CATEGORY OF USE Only Grade 3 category of use is identified for electronically powered hold-open devices and door coordinating devices. For doors used by the public and others, with little incentive to take care, i.e. where there is some chance of misuse of the door.	(3)
NUMBER OF TEST CYCLES Two test durations are identified for devices manufactured to this standard: **Grade 5:** 50,000 test cycles. For all electrically powered hold-open devices **Grade 8:** 500,000 test cycles 1. For electrically powered hold-open and free-swing door closers and devices that contain operating arms 2. For door coordinator devices incorporated in, or for use in conjunction with, automatic swing door operators, and for devices incorporated in a door closer	(5/8)
TEST DOOR MASS/SIZE **Five door mass grades** and related **hold-open power sizes** are identified **(refer to power size table opposite).** Where an electrically powered hold-open device and door coordinator device is suitable for a range of door closer power sizes, both the minimum and maximum power sizes shall be identified	(3-7)
FIRE BEHAVIOUR AND RESISTANCE Having successfully completed a fire test to **EN 1634-1**. Only Grade 1 is identified. **Grade 1:** Suitable for use on fire/smoke door assemblies	(1)
SAFETY All door closers are required to satisfy the requirement of safety in use. Only **Grade 1** is identified.	(1)
CORROSION RESISTANCE Corrosion resistance to **EN 1670** Neutral Salt Spray test and operation of the product at extreme temperatures. **Five grades are identified:** **Grade 0:** No defined corrosion resistance **Grade 1:** Mild resistance **Grade 2:** Moderate resistance **Grade 3:** High resistance **Grade 4:** Very high resistance	(0-4)

Door closer power size

DC power size	Max door width	Max door weight
EN 3	950mm	60kg
EN 4	1100mm	80kg
EN 5	1250mm	100kg
EN 6	1400mm	120kg
EN 7	1600mm	160kg

The above power sizes can be applied in three different closer types

1) Fixed – 1 power size only
2) Template – multiple power sizes by moving the closer body along the door face
3) Variable – Infinite adjustment within range of sizes

Fixed sized closers have 1 digit in the third classification box, template closers list all possible grades in the third classification box, variable closers show the maximum and minimum grades in the third classification box.

ASSA ABLOY
Opening Solutions

EN 1158 – Door coordinator devices

A double doorset with rebated meeting stiles must close in the correct sequence to achieve effective fire compartmentation in buildings.

This is achieved by using UKCA / CE marked door coordinator devices which meet EN 1158. These devices independently control both door leaves, ensuring double doors close in the correct order.

Some of our Cam-Motion® door closing devices can be installed with mechanically coordinated guide rails which meet the requirements of EN 1158.

Coordinators and optional smoke detectors can be installed with a range of our electromagnetic hold-open systems, making them suitable for fire and smoke protection doors.

EN 1158 classification key

EN 1158:1997+A1:2002

	Grading scope
CATEGORY OF USE Only Grade 3 category of use is identified for electronically powered hold-open devices and door coordinating devices. For doors used by the public and others, with little incentive to take care, i.e. where there is some chance of misuse of the door.	(3)
NUMBER OF TEST CYCLES Two test durations are identified for devices manufactured to this standard: **Grade 5:** 50,000 test cycles. For all electrically powered hold-open devices **Grade 8:** 500,000 test cycles. 1. For electrically powered hold-open and free-swing door closers and devices that contain operating arms 2. For door coordinator devices incorporated in, or for use in conjunction with, automatic swing door operators, and for devices incorporated in a door close	(5/8)
TEST DOOR MASS/SIZE **Five door mass grades** and related **hold-open power sizes** are identified **(refer to power size table opposite).** Where an electrically powered hold-open device and door coordinator device is suitable for a range of door closer power sizes, both the minimum and maximum power sizes shall be identified.	(3-7)
FIRE BEHAVIOUR AND RESISTANCE Having successfully completed a fire test to **EN 1634-1** **Grade 0:** Not suitable for use on fire/smoke door assemblies **Grade 1:** Suitable for use on fire/smoke door assemblies	(0/1)
SAFETY All door closers are required to satisfy the requirement of safety in use. Only **Grade 1** is identified.	(1)
CORROSION RESISTANCE Corrosion resistance to **EN 1670** Neutral Salt Spray test and operation of the product at extreme temperatures. **Five grades are identified:** **Grade 0:** No defined corrosion resistance **Grade 1:** Mild resistance **Grade 2:** Moderate resistance **Grade 3:** High resistance **Grade 4:** Very high resistance	(0-4)

Door closer power size

DC power size	Max door width	Max door weight
EN 3	950mm	60kg
EN 4	1100mm	80kg
EN 5	1250mm	100kg
EN 6	1400mm	120kg
EN 7	1600mm	160kg

The above power sizes can be applied in three different closer types

1) Fixed – 1 power size only

2) Template – multiple power sizes by moving the closer body along the door face

3) Variable – Infinite adjustment within range of sizes

Fixed sized closers have 1 digit in the third classification box, template closers list all possible grades in the third classification box, variable closers show the maximum and minimum grades in the third classification box.

Approved Document B

Following Approved Document B guidance on fire safety, all our extensive testing is fully compliant with EN EN 1634-1 covering a wide range of door types (timber and metal), applications (where you fit the door control) and sizes (leaf width and height) across our range of products. The specifier should be able to tailor the door control for any project safe in the knowledge that fire compliance is maintained.

Think about the right door control for your application

- Effective door coordinators to ensure compartmentation is achieved
- Holding open corridor or circulation doors to give 'barrier and/or touch free' access and egress

More details on Approved Document B can be found in the standards and legislation section.

EN 1634 – Fire tests

In addition to third party testing on our door closers for fire and smoke door assemblies, we also conduct additional tests with the following factors considered:

- Latched and unlatched
- Timber and metal doorsets with timber or metal frames
- With seals including intumescent, acoustic, drop-down, plant-on and smoke
- Time periods of fire resistance from 30 to 240 minutes, on timber and metal fire doors

More details on EN 1634 can be found in the standards and legislation section.

Approved Document M

To help meet Approved Document M it is important to reduce the opening force in line with BS 8300 whereever possible or look at removing any required opening force by selecting a door closer with barrier-free advanced features such as:

- Free-motion® (free swinging)
- Hold-open

To accommodate the accessibility requirements of less able users, we recommend using high efficiency door controls with low opening forces which are independently tested to BS 8300.

More details on Approved Document M can be found in the standards and legislation section.

BS 8300-2:2018 – Design of an accessible and inclusive built environment

BS 8300 considers the design of buildings and their approach to meet the needs of the less abled or impaired, providing guidance on good practice for the design of new buildings to meet the needs of all users.

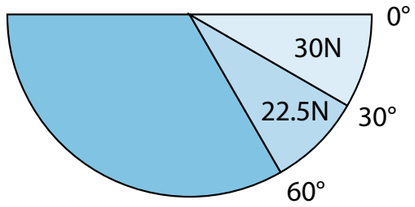

For doorsets to comply with BS 8300 the opening force should be no more than 30N between 0-30° and the closing force no more than 22.5N. This enables all users to safely and easily operate doors.

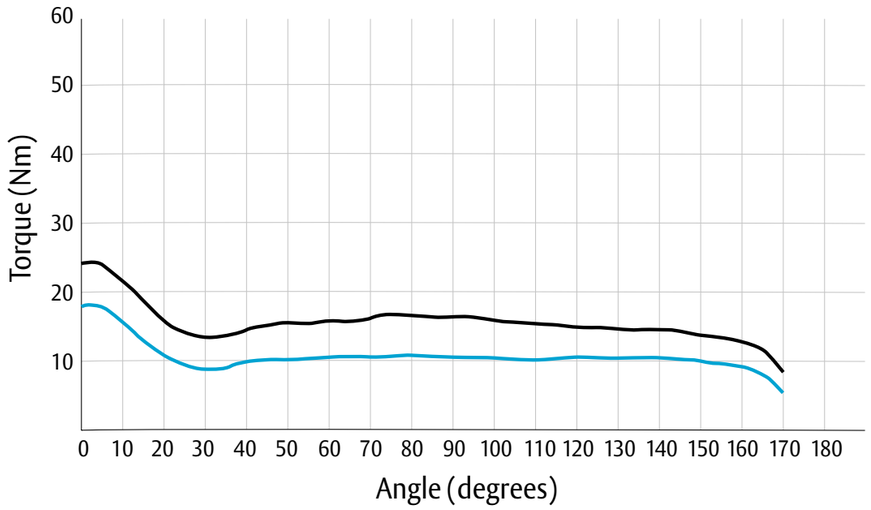

The graph tracks the motion of a high efficiency door closer during its opening and closing cycle. The nearer the trace lines appear the more efficient the door control, ensuring low smooth opening force whilst maintaining a strong closing force, helping the doorset to achieve the requirements of BS 8300 and approved Document M and B.

ASSA ABLOY
Opening Solutions

Product selector

● Standard on all variants
o Option on selected variants
* unit and door closer ordered separately

		Rack and pinion								Cam-Motion®		Solutions		Concealed Cam-Motion®			Transom		Floor springs					
		CE3F	DC135	DC140	DC200	DC300	DC300T	DC340	DC347	DC500	DC700	DC700G-CM	DC700G-FT	SC-CE3F	DC840	DC860	DC6113	1470	DC450	DC477	DC475	2000	900	3470
Features	Cam-Motion® technology									●	●	●	●	●	●	●	●	●						
	Cam and roller																					●	●	●
	High-efficiency rack & pinion	●	●	●	●	●	●	●	●															
	One million cycles durability tested																●		●	●	●			
Closing force	Closing force range	3	3	2 to 5	2 to 4	3 to 6	>7	2 to 6	5 to 7	1 to 4	3 to 6	3 to 6	3 to 6	3	1 to 4	1 to 5	3	4	4	2 to 4	3 to 6	1 to 4	1 to 6	4
	EN1 (≤ 750mm)									●					●	●						●	●	
	EN2 (≤ 850mm)			●	●			●		●					●	●				●		●	●	
	EN3 (≤ 950mm)	●	●	●	●	●		●		●	●	●	●	●	●	●	●			●	●	●	●	
	EN4 (≤ 1100mm)			●	●	●		●		●	●	●	●		●	●		●	●	●	●	●	●	●
	EN5 (≤ 1250mm)			●		●		●	●		●	●	●			●					●		●	
	EN6 (≤ 1400mm)					●		●	●		●	●	●								●		●	
	EN7 (≤ 1600mm)								●															
Door type	Fire protection doors (≥ EN3)	●	●	●	●	●	●	●	●	●	●	●	●	●	●	●	●		●	●	●	●	●	●
	Exterior doors			●	●	●	●	●	●	●	●	●	●		●	●	●		●	●	●			
	Double action doors																●	●	●	●	●	●	●	●
	Glass doors		●		●	●				●	●						●		●	●	●			
Functions	Free-swing																							
	Single fire doors with HO (EN 1155)																	●						●
	Double fire doors with co-ordination (EN 1158)																							
	Double fire doors with HO and co-ordination (EN 1155 / EN 1158)																							
	Adjustable closing speed	●	●	●	●	●	●	●	●	●	●	●	●	●	●	●	●	●	●	●	●	●	●	●
	Adjustable latching speed	●	●	●	●	●	●	●	●	●	●	●	●	●	●	●	●	●	●	●	●	●	●	
	Adjustable backcheck		●	●	●	●	●	●	●	●	●	●	●					●				●	o	●
	Delayed action					o		o			o											o	o	
	Height adjustable spindle (0-14mm)				●	●	●	●	●	●	●	●	●											
	Mechanical hold-open (not for fire doors)		o	o	o	o		o		o	o			●	o	o	o		o	o	o	o	o	
	Max. opening angle	130°	180°	180°	180°	180°	180°	180°	180°	170°	160°	170°	130°-170°	120°	120°	120°	165°	180°	130°	170°	175°	180°	180°	180°
	Non-handed (left/right)	●	●	●	●	●	●	●	●	●	●	●	●	●	●	●	●		●	●	●	●	●	●
Fire rating	Timber FD30	●		●	●	●	●	●	●	●	●	●	●	●	●							●	●	●
	Timber FD60	●		●	●	●	●	●	●	●	●			●	●	●	●					●	●	●
	Timber FD120	●		●	●	●	●	●	●	●	●											o	o	
	Metal FD30											o								●				
	Metal FD60	●	●	●	●	●	●			●	●				●	●			●		●	o	o	o
	Metal FD90	●	●	●	●	●	●			●	●				●	●						o	o	o
	Metal FD120	●	●	●	●	●	●			●	●				●	●						o	o	o
	Metal FD240	●	●	●	●	●	●			●	●				●	●						o	o	o

ASSA ABLOY
Opening Solutions

Product selector

- ● Standard on all variants
- o Option on selected variants
- * unit and door closer ordered separately

		Electromagnetic										Electromagnetic											
							G460 with*		G461 with*			G462 with*		G464 with*		G880 with*		G881 with*		G882 with*		G884 with*	
		DC300G-HF	DC340TE includes G460	DC700 G-FM	Guardian	4870/ 9870	DC500	DC700	DC500	DC700		DC500	DC700	DC500	DC700	DC840	DC860	DC840	DC860	DC840	DC860	DC840	DC860
Features	Cam-Motion® technology			●			●	●	●	●		●	●	●	●	●	●	●	●	●	●	●	●
	Cam and roller				●	●																	
	High-efficiency rack & pinion	●	●																				
	One million cycles durability tested																						
Closing force	Closing force range	3 to 6	1 to 4	3 to 6	4	4	1 to 4	3 to 6	1 to 4	3 to 6		1 to 4	3 to 6	1 to 4	3 to 6	1 to 4	1 to 5	1 to 4	1 to 5	1 to 4	1 to 5	1 to 4	1 to 5
	EN1 (≤ 750mm)		●				●		●			●		●		●	●	●	●	●	●	●	●
	EN2 (≤ 850mm)		●				●		●			●		●		●	●	●	●	●	●	●	●
	EN3 (≤ 950mm)	●	●	●			●	●	●	●		●	●	●	●	●	●	●	●	●	●	●	●
	EN4 (≤ 1100mm)	●	●	●	●	●	●	●	●	●		●	●	●	●	●	●	●	●	●	●	●	●
	EN5 (≤ 1250mm)	●		●				●		●			●		●		●	●	●	●	●	●	●
	EN6 (≤ 1400mm)	●		●				●		●			●		●								
	EN7 (≤ 1600mm)																						
Door type	Fire protection doors (≥ EN3)	●	●	●	●	●	●	●	●	●		●	●	●	●	●	●	●	●	●	●	●	●
	Exterior doors								●	●													
	Double action doors																						
	Glass doors																						
Functions	Free-swing	●		●	●	●																	
	Single fire doors with HO (EN 1155)	●	●		●	●	●	●				●	●	●	●	●	●			●	●	●	●
	Double fire doors with co-ordination (EN 1158)								●	●								●	●				
	Double fire doors with HO and co-ordination (EN 1155 / EN 1158)											●	●	●	●					●	●	●	●
	Adjustable closing speed	●	●	●	●	●	●	●	●	●		●	●	●	●	●	●	●	●	●	●	●	●
	Adjustable latching speed	●	●	●	●	●	●	●	●	●		●	●	●	●	●	●	●	●	●	●	●	●
	Adjustable backcheck						●	●	●	●		●	●	●	●								
	Delayed action																						
	Height adjustable spindle (0-14mm)	●		●			●	●	●	●		●	●	●	●								
	Mechanical hold-open (not for fire doors)																						
	Max. opening angle	130°	130°	170°	180°	180°	130°	130°	130°	130°		130°	130°	130°	130°	130°	130°	130°	130°	130°	130°	130°	130°
	Non-handed (left/right)	●	●	●	●	●	●	●	●	●		●	●	●	●	●	●	●	●	●	●	●	●
Fire rating	Timber FD30	●	●		●	●	●	●	●	●		●	●	●	●	●	●	●	●	●	●	●	●
	Timber FD60	●	●		●	●	●	●	●	●		●	●	●	●	●	●	●	●	●	●	●	●
	Timber FD120	●	●		●	●	●	●	●	●		●	●	●	●	●	●						
	Metal FD30																						
	Metal FD60	●			●	●																	
	Metal FD90	●			●	●												●	●				
	Metal FD120				●	●										●	●						
	Metal FD240				●																		

Rack and pinion

Rack and pinion door controls are the most traditional and widest used style, they are supplied complete with a link arm to allow the opening and closing motion.

We offer some of the most efficient rack and pinion closers on the market to ensure doors are easier to open whilst retaining a strong closing force.

The range comes in a variety of finishes and every closer has a matching arm set, meaning it is easier to suite and they can be styled to meet almost any application.

Our extensive range of rack and pinion door controls for doors and gates have fully adjustable closing and latching speeds which are guaranteed to be consistent across a wide range of temperatures.

For large or heavy doors and areas where there are higher wind pressures, we also offer heavy duty models.

Range benefits

- Efficient opening for ease of access
- Models to suit doors up to 1600mm wide and 160kg in weight
- Backcheck on most products
- Optional delayed action on selected closers
- Heavy duty model also available for more demanding projects

CE3F

UNION fixed power size 3 entry-level door closer with link arm.

Features and benefits

- UKCA / CE marked in all 3 fixing positions
- Compact size
- Fire tested for timber and metal doors
- Cost effective solution for basic applications

Classification code

3 (3/4) | 8 (8) | 3 (1-7) | 1 (0/1) | 1 (1) | 3 (0-4)

EN 1154:1996+A1:2002

Testing and certification

UKCA / CE marked	Yes
Certified in compliance with	EN 1154
Suitable for fire doors	Timber FD30/FD60/FD120, metal FD60/FD90/FD120/FD240
Certifire approval	Yes
Guarantee	10 years

Specification

Closing force	EN 3
Mechanism	Rack and pinion
Closing speed	Variable between 130°-15°
Latching speed	Variable between 15°-0°
Backcheck	N/A
Delayed action	N/A
Door width up to	950mm
Maximum door weight	60kg
Maximum opening angle	130° maximum angle of opening (controlled closing)
Height adjustable arm system	N/A
Mounting method	Hinge side, non-hinge side and transom mount
Handing	Non-handed
Dimensions (H x D x W)	42 x 61 x 182mm
Finish	SIL
Accessories	N/A

Dimensions

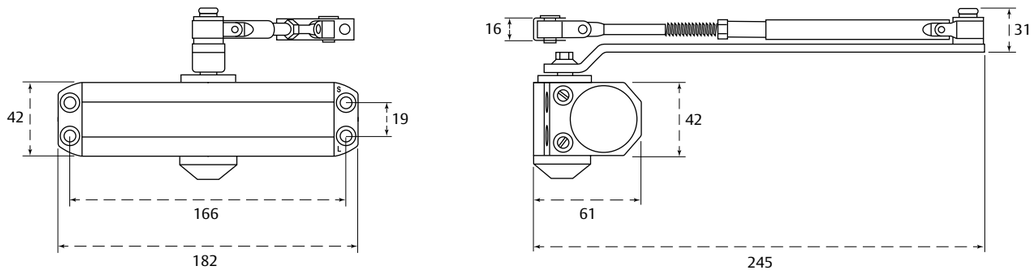

How to order

Order code	Description	Finish
J-CE3F-SIL	Fixed power size 3 door closer with link arm	SIL

ASSA ABLOY
Opening Solutions

DC135

Fixed power size 3 rack and pinion control with guide rail.

Features and benefits

- Guide rail arm (G193)
- Backcheck feature offers optimum protection for doors and walls
- Ideal application for student accommodation and budget hospitality projects
- Cost effective solution for guide rail applications

Classification code

4	8	3	1	1	4
(3/4)	(8)	(1-7)	(0/1)	(1)	(0-4)

EN 1154:1996+A1:2002

Testing and certification

UKCA / CE marked	Yes
Certified in compliance with	EN 1154
Suitable for fire doors	Metal FD60/FD90/FD120/FD240
Certifire approval	No
Guarantee	10 years

Specification

Closing force	EN 3
Mechanism	Rack and pinion
Closing speed	Variable between 180°-15°
Latching speed	Variable between 15°-0°
Backcheck	Variable above 75°
Delayed action	N/A
Door width up to	950mm
Maximum door weight	60kg
Maximum opening angle	180° (hinge side)
Height adjustable arm system	N/A
Mounting method	Hinge side, non-hinge side
Handing	Non-handed
Dimensions (H x D x W)	60 x 43 x 233mm
Finish	SIL
Accessories	See door controls accessory section for opening damper

Dimensions

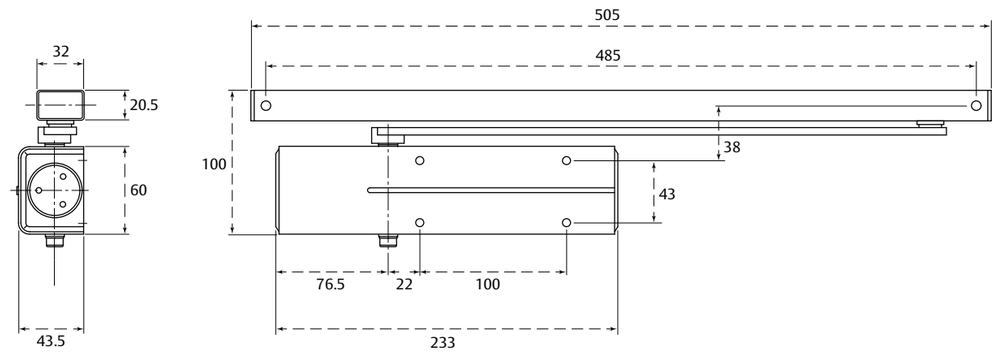

How to order

Order code	Description	Finish
DC135A	Fixed power size 3 door closer with guide rail	SIL

ASSA ABLOY
Opening Solutions

DC140

Flexible 2 to 5 rack and pinion closer with link arm, variable by installation position.

Features and benefits

- Assists the overall doorset in meeting the requirements of BS 8300
- Backcheck feature offers optimum protection for doors and walls
- Ideal for the half leaf door of leaf and a half doorsets
- Favourably priced, reliable closer model for standard door applications

Classification code

EN 2/3/4

4	8	2/3/4	1	1	4
(3/4)	(8)	(1-7)	(0/1)	(1)	(0-4)

EN 1154:1996+A1:2002

EN 5

3	8	5	1	1	4
(3/4)	(8)	(1-7)	(0/1)	(1)	(0-4)

Testing and certification

UKCA / CE marked	Yes
Certified in compliance with	EN 1154, BS 8300
Suitable for fire doors	Timber FD30/FD60/FD120, metal FD60/FD90/FD120/FD240
Certifire approval	Yes
Guarantee	10 years

Specification

Closing force	EN 2/3/4/5
Mechanism	Rack and pinion
Closing speed	Variable between 180°-15° / EN 5 = 125°-15°
Latching speed	Variable between 15°-0°
Backcheck	Variable above 75°
Delayed action	N/A
Door width up to	900mm
Maximum door weight	100kg
Maximum opening angle	180° (hinge side) EN 5 = 125°
Height adjustable arm system	N/A
Mounting method	Hinge side, non-hinge side and transom mount
Handing	Non-handed
Dimensions (H x D x W)	55 x 43 x 206mm
Finish	SIL
Accessories	See door controls accessory section for items such as hold open arm and brackets

Dimensions

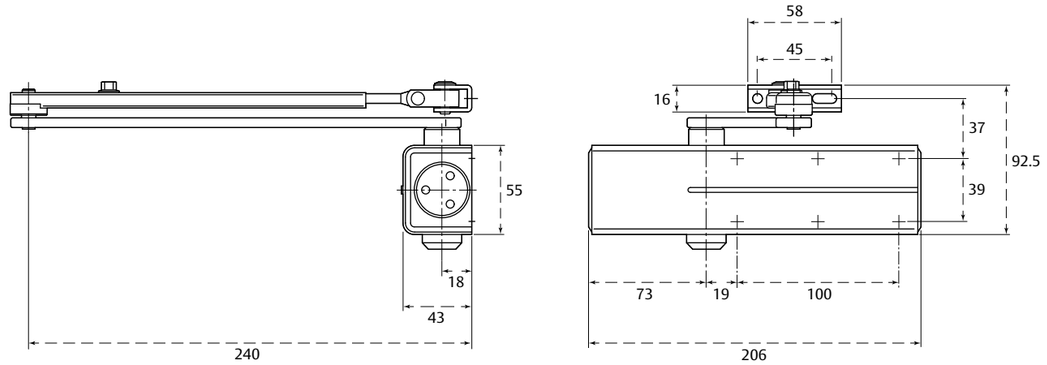

How to order

Order code	Description	Finish
DC140A-1	Template adjustable power size 2/3/4/5 with link arm	SIL

ASSA ABLOY
Opening Solutions

DC200

Adjustable power size 2-4 rack and pinion closer with link arm.

Features and benefits

- Assists the overall doorset in meeting the requirements of BS 8300
- Backcheck feature offers optimum protection for doors and walls
- Variable power adjustment to suit a wide range of doorsets
- Competitive variable solution for standard door applications

Classification code

4 (3/4) | 8 (8) | 4 2 (1-7) | 1 (0/1) | 1 (1) | 4 (0-4)

EN 1154:1996+A1:2002

Testing and certification

UKCA / CE marked	Yes
Certified in compliance with	EN 1154, BS 8300
Suitable for fire doors	Timber FD30/FD60/FD120, metal FD60/FD90/FD120/FD240
Certifire approval	Yes
Guarantee	10 years

Specification

Closing force	EN 2-4
Mechanism	Rack and pinion
Closing speed	Variable between 180°-15°
Latching speed	Variable between 15°-0°
Backcheck	Variable above 75°
Delayed action	Yes
Door width up to	1100mm
Maximum door weight	80kg
Maximum opening angle	180° (hinge side)
Height adjustable arm system	14mm
Hold-open mode (with hold-open link arm L191)	Adjustable 75°-150° (can be enabled and disabled) Not suitable for use on fire/smoke door assemblies
Mounting method	Hinge side, non-hinge side and transom mount
Handing	Non-handed
Dimensions (H x D x W)	60 x 50 x 233mm
Finish	SIL, SSS
Accessories	See door controls accessory section for items such as alternative brackets and mounting plates

Dimensions

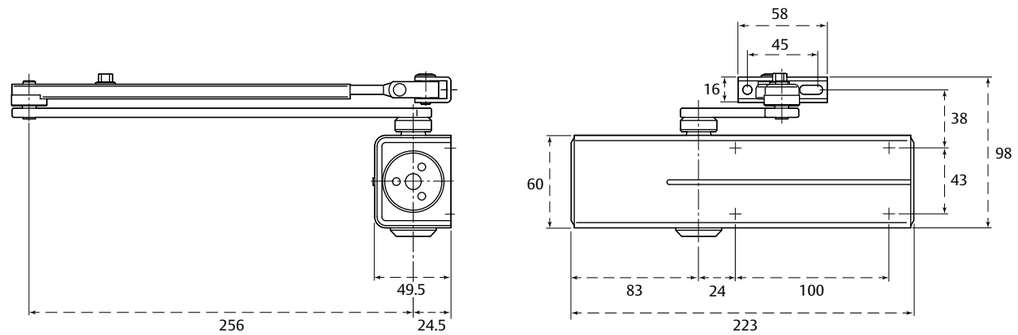

How to order

Order code	Description	Finish
DC200A-1	Adjustable power size 2-4 door closer with link arm	SIL
DC200A/SS-1	Adjustable power size 2-4 door closer with link arm	SSS

ASSA ABLOY
Opening Solutions

DC300

Adjustable power size 3-6 rack and pinion controls with link arm.

Features and benefits

- Assists the overall doorset in meeting the requirements of BS 8300
- Backcheck feature offers optimum protection for doors and walls
- Compact body dimensions with large door performance
- Largely unaffected by temperature fluctuations due to its thermodynamic valves

Classification code

4 (3/4) | 8 (8) | 6 3 (1-7) | 1 (0/1) | 1 (1) | 4 (0-4)

EN 1154:1996+A1:2002

Testing and certification

UKCA / CE marked	Yes
Certified in compliance with	EN 1154, BS 8300
Suitable for fire doors	Timber FD30/FD60/FD120, metal FD60/FD90/FD120/FD240
Certifire approval	Yes
Guarantee	10 years

Specification

Closing force	EN 3-6
Mechanism	Rack and pinion
Closing speed	Variable between 180°-15°
Latching speed	Variable between 15°-0°
Backcheck	Variable above 75°
Delayed action	Yes, depending on model
Door width up to	1400mm
Maximum door weight	120kg
Maximum opening angle	180° (hinge side)
Height adjustable arm system	14mm
Hold-open mode (with hold-open link arm L191)	Adjustable 75°-150° (can be enabled and disabled) Not suitable for use on fire/smoke door assemblies
Mounting method	Hinge side, non-hinge side and transom mount
Handing	Non-handed
Dimensions (H x D x W)	60 x 50 x 260mm
Finish	SIL, SSS
Accessories	See door controls accessory section for items such as alternative brackets and mounting plates

Dimensions

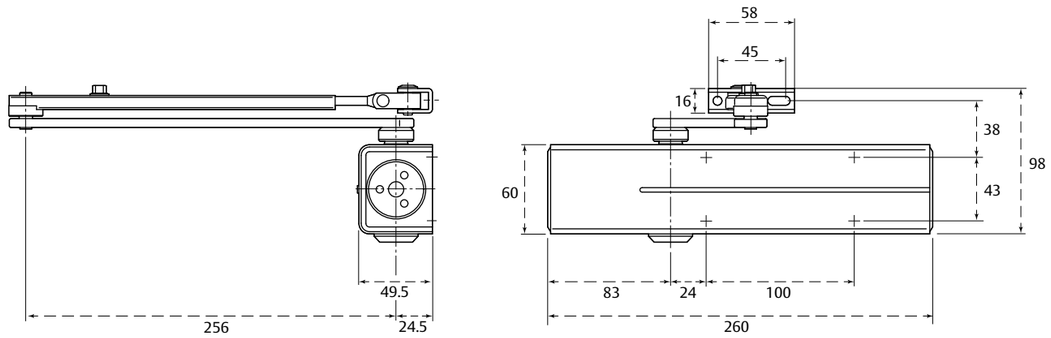

How to order

Order code	Description	Finish
DC300A-1	Adjustable power size 3-6 door closer with link arm	SIL
DC300A/SS-1	Adjustable power size 3-6 door closer with link arm	SSS
DC300+DA	Adjustable power size 3-6 door closer with delayed action	SIL
DC300+DA/SS-1	Adjustable power size 3-6 door closer with delayed action	SSS

ASSA ABLOY
Opening Solutions

DC300T

Extra heavy duty tandem rack and pinion door control exceeds EN 7.

Features and benefits

- Incorporating 2 x DC300 bodies on a backplate to provide reliable performance for more challenging applications or requirements; high winds, heavy or wider doors etc.
- High quality components and manufacture providing reliability in extreme conditions
- Largely unaffected by temperature fluctuations thanks to its thermodynamic valves
- Heavy duty link arm as standard (L197)

Classification code

Refer to DC300 for tested UKCA and CE data. For fire door applications a review of the doorset test evidence is advised.

10 YEAR GUARANTEE

Testing and certification

UKCA / CE marked	No (exceeds EN power size)
Certified in compliance with	N/A
Suitable for fire doors	Timber FD30/FD60/FD120, metal FD60/FD90/FD120/FD240
Certifire approval	No
Guarantee	10 years

Specification

Closing force	EN >7 (2 x DC300)
Mechanism	Rack and pinion x2
Closing speed	Variable between 180°-15°
Latching speed	Variable between 15°-0°
Backcheck	Variable above 75°
Delayed action	No
Door width up to	1800mm
Maximum door weight	160kg
Maximum opening angle	180° (hinge side) / 165° (non-hinge side)
Height adjustable arm system	14mm
Mounting method	Hinge side, non-hinge side
Handing	Non-handed
Dimensions (H x D x W)	125 x 55 x 260mm
Finish	SIL
Accessories	See door controls accessory section for mounting plate kit and alternative brackets

Dimensions

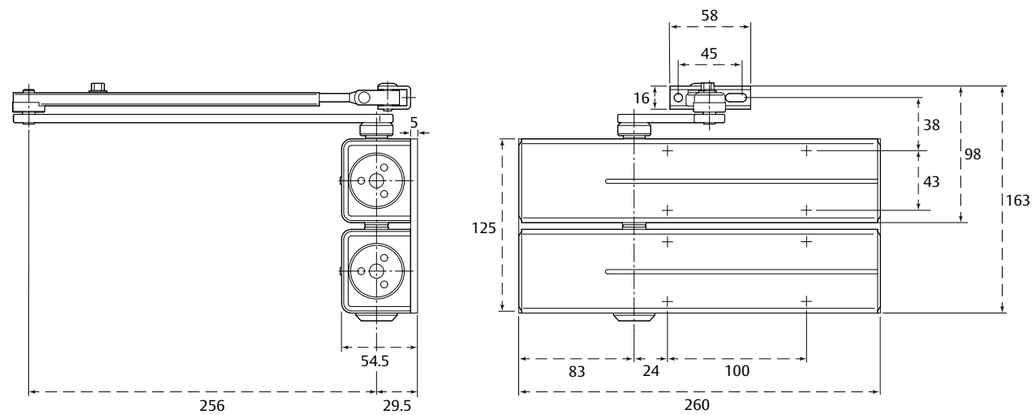

How to order

Order code	Description	Finish
DC300A/TANDEM-1	Adjustable power size 3-6 door closer with link arm	SIL

ASSA ABLOY
Opening Solutions

DC340

Rack and pinion closer with guide rail or link arm.

Features and benefits

- Backcheck feature offers optimum protection for doors and walls
- High quality components and manufacture providing reliability in extreme conditions
- Largely unaffected by temperature fluctuations thanks to its thermodynamic valves
- Available with guide rail or link arm options for a complete project approach

Classification code

Link arm

4	8	6	1	1	3
(3/4)	(8)	2 (1-7)	(0/1)	(1)	(0-4)

EN 1154:1996+A1:2002

Guide rail

4	8	4	1	1	3
(3/4)	(8)	1 (1-7)	(0/1)	(1)	(0-4)

Testing and certification

UKCA / CE marked	Yes
Certified in compliance with	EN 1154
Suitable for fire doors	Timber FD30/FD60/FD120
Certifire approval	Yes
Guarantee	10 years

Specification

Closing force	EN 1-4* / EN 2-6†
Mechanism	Rack and pinion
Closing speed	Variable between 180°-15°
Latching speed	Variable between 15°-0°
Backcheck	Variable above 75°
Delayed action	Yes, depending on model
Door width up to	1100mm* / 1400mm†
Maximum door weight	80kg* / 120kg†
Maximum opening angle	180° (hinge side) / 130° (non-hinge side)
Height adjustable arm system	14mm
Hold-open mode (with hold-open link arm L191)	Adjustable 75°-150° (can be enabled and disabled) Not suitable for use on fire/smoke door assemblies
Mounting method	Hinge side, non-hinge side
Handing	Non-handed
Dimensions (H x D x W)	69 x 64.5 x 306mm
Finish	SIL, SSS
Accessories	See door controls accessory section for mounting plates

* guide rail variant † link arm variant

Dimensions

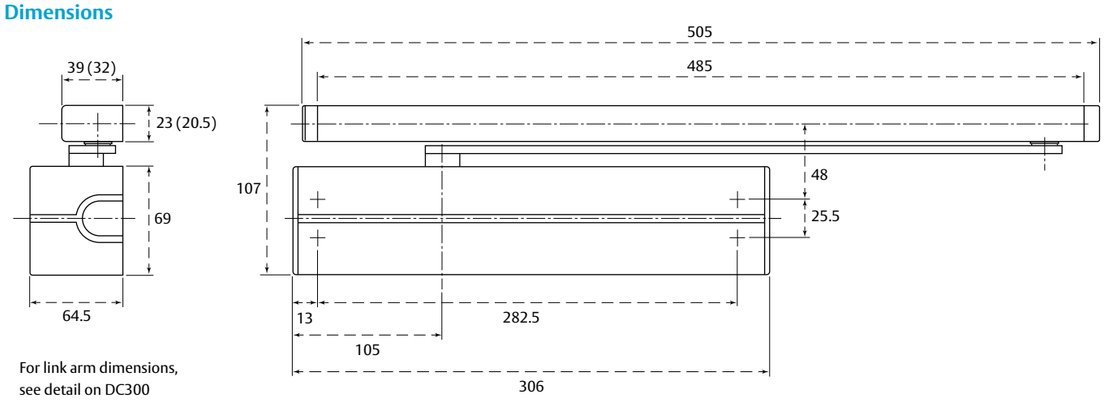

For link arm dimensions, see detail on DC300

How to order

Order code	Description	Finish
DC340A	Adjustable closer 2-6 with link arm	SIL
DC340A/SS	Adjustable closer 2-6 with link arm	SSS
DC340A+DA	Delayed action, adjustable closer 2-6 with link arm	SIL
DC340A+DA/SS	Delayed action, adjustable closer 2-6 with link arm	SSS
DC340AT5	Adjustable closer 1-4 with guide rail	SIL

ASSA ABLOY
Opening Solutions

DC347

Adjustable power size 5-7 heavy duty rack and pinion closer with link arm.

Features and benefits

- Heavy duty link arm provided as standard to ensure high performance on heavier doors
- Backcheck feature offers optimum protection for doors and walls
- Built purely for performance to satisfy larger doors and challenging applications such as high wind pressures
- Heavy duty link arm as standard (L197)

Classification code

4 (3/4) | 8 (8) | 7 5 (1-7) | 1 (0/1) | 1 (1) | 3 (0-4)

EN 1154:1996+A1:2002

Testing and certification

UKCA / CE marked	Yes
Certified in compliance with	EN 1154
Suitable for fire doors	Timber FD30/FD60/FD120
Certifire approval	No
Guarantee	10 years

Specification

Closing force	EN 5-7
Mechanism	Rack and pinion
Closing speed	Variable between 180°-0°
Latching speed	Variable between 15°-0°
Backcheck	Variable above 75°
Delayed action	No
Door width up to	1600mm
Maximum door weight	160kg
Maximum opening angle	180° (hinge side) / 130° (non-hinge side)
Height adjustable arm system	14mm
Hold-open mode (with hold-open link arm L191)	Adjustable 75°-150° (can be enabled and disabled) Not suitable for use on fire/smoke door assemblies
Mounting method	Hinge side, non-hinge side
Handing	Non-handed
Dimensions (H x D x W)	69 x 64.5 x 306mm
Finish	SIL, SSS
Accessories	See door controls accessory section for items such as brackets and mounting plate

Dimensions

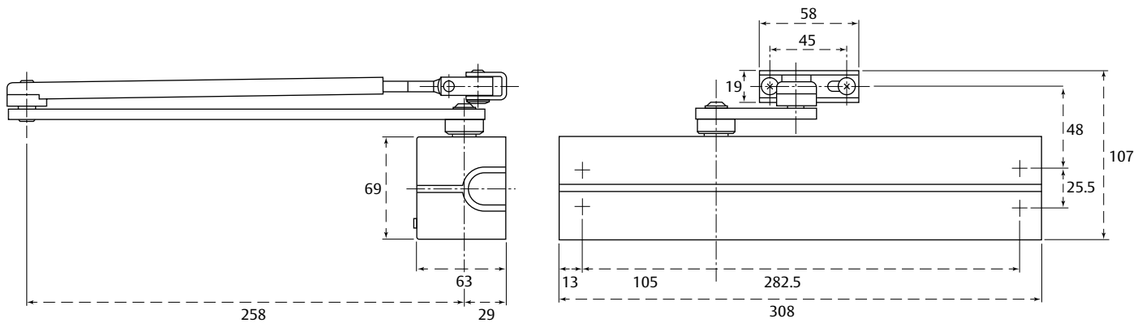

How to order

Order code	Description	Finish
DC347A	Adjustable closer 5-7 with link arm	SIL
DC347A/SS	Adjustable closer 5-7 with link arm	SSS

Cam-Motion®

Our innovative Cam-Motion® range is a market leading door control solution, which makes the opening and closing of doors easier for users.

During the opening cycle the Cam-Motion® technology decreasing torque effect makes the door easier to open for the users, helping meet BS 8300 and Approved Document M requirements. However, when the door is in its closing cycle, this works in reverse ensuring the door is closed securely and safely, again helping to meet Approved Document B smoke and fire requirements.

Our Cam-Motion® range is available for virtually any door type, including single and double leaf doors in combination with concealed and surface-mounted mechanical, electromagnetic and electrohydraulic closers.

Range benefits

- Models to suit doors up to 1400mm wide and 120kg in weight
- Backcheck on all products
- Optional delayed action on selected closers
- Universal fitting technology that can be installed in all three fitting positions

Torque curves

Cam-Motion® technology makes opening a door easier by reducing the force required. This makes it the ideal solution for children, the elderly and the less able.

Our Cam-Motion® door controls comply with the requirements of EN 1154 for fire doors by ensuring that the door sits firmly in the frame to prevent the spread of fire and smoke.

The graphs below demonstrate the rapidly decreasing opening force of our Cam-Motion® door closers:

DC500

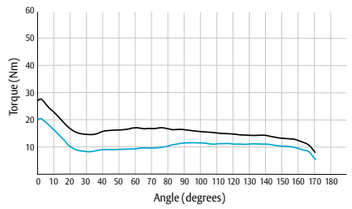

DC700

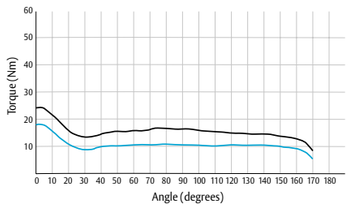

DC500

Adjustable power size 1 to 4 door closer featuring Cam-Motion® technology and guide rail.

Features and benefits

- Ideal for high traffic doors
- Features Cam-Motion® technology, for easier door opening and improved accessibility due to its high efficiency
- Allows precise control for doors that have to provide both access and protection
- BS 8300 compliant for ease of access

Classification code

3 (3/4) | 8 (8) | 4 1 (1-7) | 1 (0/1) | 1 (1) | 4 (0-4)

EN 1154:1996+A1:2002

Testing and certification

UKCA / CE marked	Yes
Certified in compliance with	EN 1154, BS 8300
Suitable for fire doors	Timber FD30/FD60/FD120, metal FD60/FD90/FD120/FD240
Certifire approval	Yes
Guarantee	10 years

Specification

Closing force	EN 1-4
Mechanism	Cam action
Closing speed	Variable between 170°-10°
Latching speed	Variable between 10°-0°
Backcheck	Variable above 75°
Delayed action	N/A
Door width up to	1100mm
Maximum door weight	60kg
Maximum opening angle	170° (hinge side) / 120° (non-hinge side)
Height adjustable arm system	14mm
Mounting method	Hinge side, non-hinge side and transom mount
Handing	Non-handed
Dimensions (H x D x W)	64 x 57 x 272mm
Finish	SSS, SIL
Accessories	See door controls accessory section for items such as mechanical hold open, opening damper and mounting plates

Dimensions

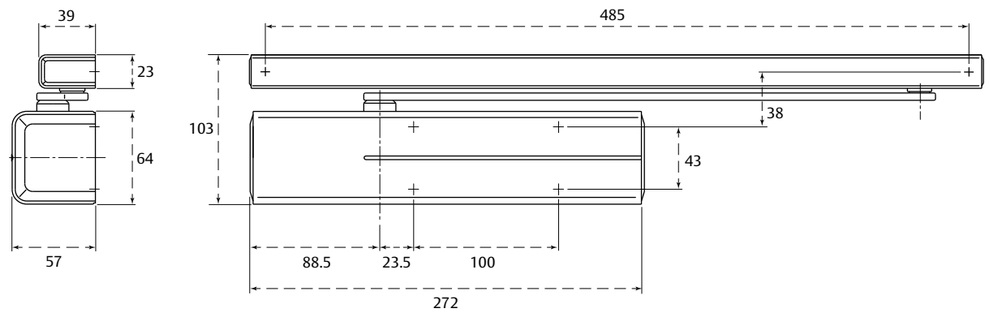

How to order

Order code	Description	Finish
DC500A	Adjustable closer 1-4 with guide rail	SIL
DC500A/SS	Adjustable closer 1-4 with guide rail	SSS

DC700

Adjustable power size 3 to 6 door closer featuring Cam-Motion® technology and guide rail.

Features and benefits

- Allows precise control for doors that have to balance ease of access with the need for fire safety
- Easier door opening and improved accessibility due to rapidly decreasing torque, assisting the overall doorset in meeting the requirements of BS 8300
- Backcheck feature offers optimum protection for doors and walls
- Ideal for high traffic areas

Classification code

3 (3/4) | 8 (8) | 6 3 (1-7) | 1 (0/1) | 1 (1) | 4 (0-4)

EN 1154:1996+A1:2002

Testing and certification

UKCA / CE marked	Yes
Certified in compliance with	EN 1154, BS 8300
Suitable for fire doors	Timber FD30/FD60/FD120, metal FD60/FD90/FD120/FD240
Certifire approval	Yes
Guarantee	10 years

Specification

Closing force	EN 3-6
Mechanism	Cam action
Closing speed	Variable between 170°-10°
Latching speed	Variable between 10°-0°
Backcheck	Variable above 75°
Delayed action	Yes, depending on model
Door width up to	1400mm
Maximum door weight	120kg
Maximum opening angle	160° (hinge side) / 120° (non-hinge side)
Height adjustable arm system	14mm
Mounting method	Hinge side, non-hinge side and transom mount
Handing	Non-handed
Dimensions (H x D x W)	64 x 57 x 272mm
Finish	SSS, SIL
Accessories	See door controls accessory section for items such as mechanical hold open, opening damper and mounting plates

Dimensions

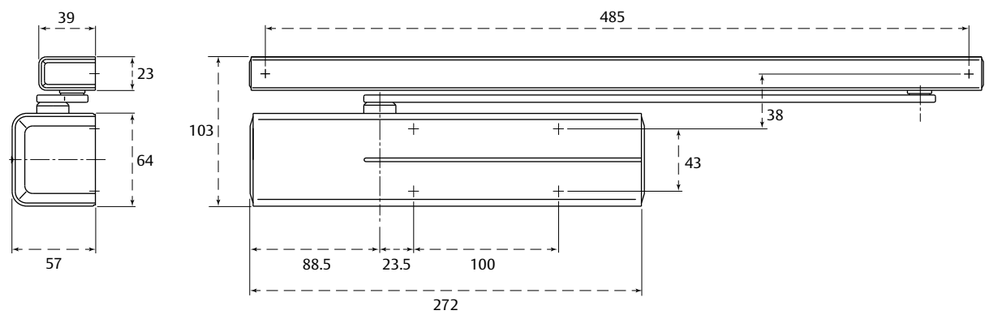

How to order

Order code	Description	Finish
DC700A	Adjustable closer 3-6 with guide rail	SIL
DC700A/SS	Adjustable closer 3-6 with guide rail	SSS
DC700A+DA	Adjustable closer delayed action 3-6 with guide rail	SIL
DC700A+DA /SS	Adjustable closer delayed action 3-6 with guide rail	SSS

Solutions range

Our advanced range of closers and enhancements offer more than just control of the door, they can incorporate additional benefits around locking, slamming and also large or more demanding door applications. These products offer additional aspects to support and solve such issues and provide a perfect solution for challenging projects.

Based around our Cam-Motion® product range, these solutions still have aesthetics at the forefront of their design. By incorporating these features all under the same cover they provide a completely integrated finish.

Range benefits

- Tailored range to address specific solutions
- Features Cam-Motion® technology
- Designed to suite with our other Cam-Motion® closers
- Suits a range of door widths

DC700G-CM

Cam-Motion® door closer with integrated Close-Motion® element for safe anti-slam and silent closing.

Features and benefits

- Cam-Motion® technology combined with an integrated damping device to close doors quietly, safely and securely
- Anti-slam feature is particularly suitable where there are vulnerable users (elderly and children) as it reduces any trapping pressure
- Provides quiet and controlled closing when silence or security is paramount
- Can assist doors to reliably close in environments with wind pressure

Classification code

3 (3/4) | 8 (8) | 6 3 (1-7) | 1 (0/1) | 1 (1) | 3 (0-4)

EN 1154:1996+A1:2002

Testing and certification

UKCA / CE marked	Yes
Certified in compliance with	EN 1154, BS 8300
Suitable for fire doors	Timber FD30, metal FD30
Certifire approval	No
Guarantee	10 years

Specification

Closing force	EN 3-6
Mechanism	Cam action
Closing speed	Variable between 170°-10°
Latching speed	Variable between 10°-0°
Backcheck	Variable above 75°
Delayed action	N/A
Door width up to	1400mm
Maximum door weight	120kg
Maximum opening angle	170° (hinge side)
Height adjustable arm system	14mm
Mounting method	Hinge side
Handing	Non-handed
Dimensions (H x D x W)	66 x 66 x 528mm
Dimensions (H x D x W) guide rail	30 x 43.5 x 528mm
Finish	SIL, SSS
Accessories	See door controls accessory section for items such as mounting plates, hold open device and opening damper

Close-Motion® unit

Support when closing	Yes
Damping when closing	Yes
Horizontal adjustment	(± 6mm)
Vertical adjustment	(± 5mm)
Handing	Non-handed
Tamper protection	Ensuring fire compliance is maintained
Suitable for fire doors	Yes, with tamper protection

Dimensions

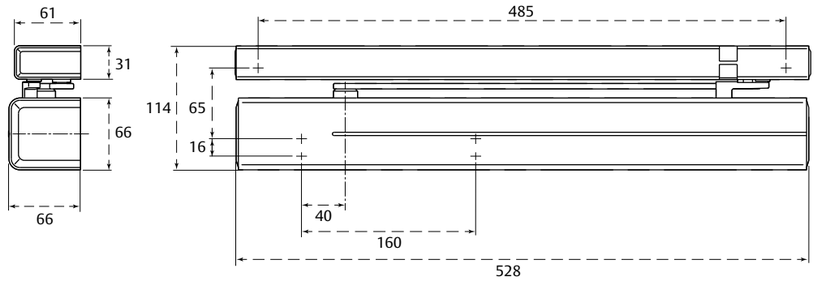

How to order

Order code	Description	Finish
DC700G-CM	Adjustable 3-6 close motion cam-action closer	SIL
DC700G-CM/SS	Adjustable 3-6 close motion cam-action closer	SSS

DC700G-FT

World's first security door closer featuring a Cam-Motion® door control with an integrated latchbolt and escape door strike.

Features and benefits

- Integrated fail-safe locking solution ideal for building access and egress and total suitability for use on escape way doors
- Simple connection to the fire or smoke alarm system, which unlocks the door to ensure emergency exit route compliance
- Easily integrated into a building management system or monitored from a central display and operator panel
- Easy turn-key solution for combined fire and security doorsets

Classification code

3 (3/4) | 8 (8) | 6 3 (1-7) | 1 (0/1) | 1 (1) | 4 (0-4)

EN 1154:1997+A1:2002

2 YEAR GUARANTEE Electrical | 10 YEAR GUARANTEE Mechanical

Testing and certification

UKCA / CE marked	Yes
Certified in compliance with	EN 1154, BS 8300
Suitable for fire doors	Timber FD30
Certifire approval	No
Guarantee	10 years mechanical, 2 years electrical

Specification

Closing force	EN 3-6
Mechanism	Cam motion
Closing speed	Variable between 170°-15°
Latching speed	Variable between 15°-0°
Backcheck	Variable above 75°
Delayed action	Yes
Door width up to	850 - 1200mm
Maximum door weight	120kg
Maximum opening angle	170° (hinge side) / 120° (non-hinge side)
Height adjustable arm system	14mm
Mounting method	Hinge side and non-hinge side
Handing	Non-handed
Dimensions (H x D x W)	66 x 66 x 727mm
Dimensions (H x D x W) guide rail	30 x 43.5 x 727mm
Finish	SIL, SSS
Accessories	See door controls accessory section for items such as escape strike, spacer plates, mounting plates and opening damper

Escape door strike

Holding force	2000 N
Rated voltage	12 V DC / 24 V DC using FaFix®, adjustable by 2mm
Rated current	190 mA / 12 V; 95 mA / 24 V
Rated operational voltage tolerance	+/- 10 %
Anchor contact	Yes
Certified in compliance with	EltVTR
Approved system in compliance with EltVTR	Escape route controller

Dimensions

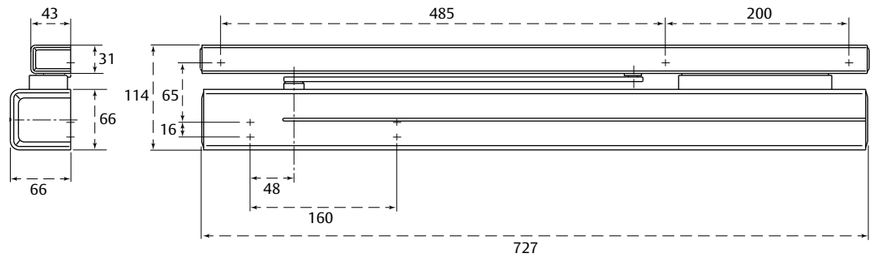

How to order

Order code	Description	Finish
DC700G-FT	Adjustable security closer 3-6 with guide rail	SIL
DC700G-FT/SS	Adjustable security closer 3-6 with guide rail	SSS

Concealed Cam-Motion®

Designed not to be seen, whilst still offering market-leading performance across a wide range of applications with high efficiencies and easier opening.

Exactly like our surface mounted Cam–Motion® units, this highly efficient mechanism helps to meet the requirements of BS 8300. Combining this with the CE mark and fire testing for timber doors and metal doors, our concealed closers are ideal for both residential and commercial applications.

Concealing a door closer within the door leaf not only carries aesthetic benefits but also offers the door closer protection from abuse or tampering. Additionally, whilst these closers are not classed as true anti-ligature products, by nature of being concealed they do provide less opportunity than surface mounted units.

Range benefits

- Reduced risk of tampering
- Less vulnerability to vandalism
- Anti-ligature properties due to less exposed ligature points
- Concealed to give an aesthetic and uncluttered appearance

Torque curves

Cam-Motion® technology makes an ideal opening a door easier by reducing the force required making them ideal solution for children, the elderly and the less able. The graph below demonstrates the rapidly decreasing opening force of our DC840 concealed Cam-Motion® door closers:

DC840

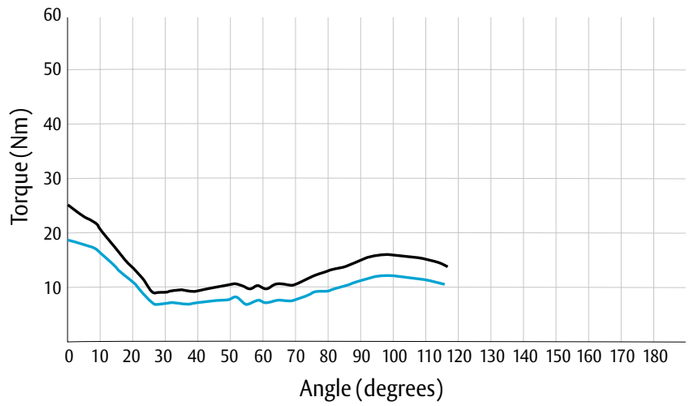

ASSA ABLOY
Opening Solutions

SC-CE3F

UNION cam action fixed power size 3 concealed door closer.

Features and benefits

- Ideal for applications where aesthetics are paramount
- Slimline profile for quicker installation
- High efficiency cam action mechanism for ease of opening, assisting the overall doorset in meeting the requirements of BS 8300
- Mechanical hold open and damper accessory available

Classification code

3 (3/4) | 8 (8) | 3 (1-7) | 1 (0/1) | 1 (1) | 3 (0-4)

EN 1154:1996+A1:2002

Testing and certification

UKCA / CE marked	Yes
Certified in compliance with	EN 1154, BS 8300
Suitable for fire doors	Timber FD30/FD60. Intumescent protection must be used.
Certifire approval	No
Guarantee	10 years

Specification

Closing force	EN 3
Mechanism	Cam action
Closing speed	Yes
Latching speed	Yes
Backcheck	No (guide rail damper available)
Delayed action	No
Door width up to	950mm
Maximum door weight	60kg
Height adjustable arm system	14mm
Hold open mode	Available
Maximum opening angle	120° (hinge side)
Mounting method	Concealed
Handing	Non-handed
Dimensions (H x D x W)	54 x 32 x 201mm
Finish	SIL
Accessories	See door controls accessory section for items such as mechanical hold open, guide rail damper and intumescent kits

Dimensions

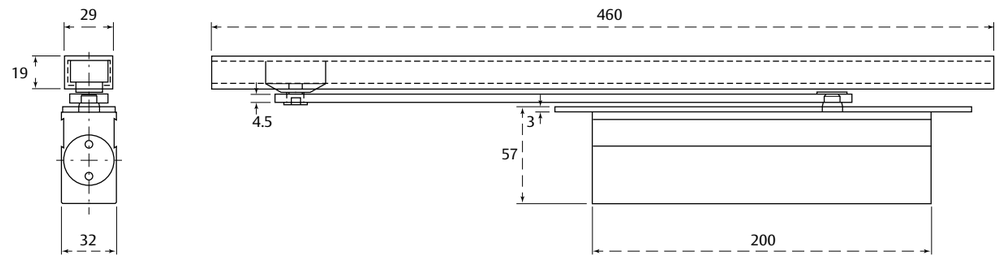

How to order

Order code	Description	Finish
SC-CE3F	Fixed power size 3 concealed door closer with guide rail	SIL

ASSA ABLOY
Opening Solutions

DC840

Concealed door control with Cam-Motion® technology and small standard concealed guide rail G892.

Features and benefits

- Ideal for applications where aesthetics are paramount
- Concealed installation helps prevent unauthorised adjustment or tampering of the door control
- High efficiency cam action mechanism for ease of opening, assisting the overall doorset in meeting the requirements of BS 8300
- Mechanical hold open accessory available for use on non-fire doors only

Classification code

3 (3/4) | 8 (8) | 4 1 (1-7) | 1 (0/1) | 1 (1) | 3 (0-4)

EN 1154:1996+A1:2002

Testing and certification

UKCA / CE marked	Yes
Certified in compliance with	EN 1154, BS 8300
Suitable for fire doors	Timber FD30/FD60, metal FD60/FD90/FD120/FD240. Intumescent protection must be used.
Certifire approval	No
Guarantee	10 years

Specification

Closing force	EN 1-4
Mechanism	Cam action
Closing speed	Variable between 120°-7°
Latching speed	Variable between 7°-0°
Backcheck	Variable above 75°
Delayed action	N/A
Door width up to	1100mm
Maximum door weight	80kg
Height adjustable arm system	14mm
Hold open mode	Hold-open accessory available (A156)
Maximum opening angle	120° (hinge side) / <120° (non-hinge side)
Mounting method	Concealed (40mm minimum leaf)
Handing	Non-handed
Dimensions (H x D x W)	45 x 32 x 278mm
Finish	SIL
Accessories	See door controls accessory section for items such as mechanical hold open device, opening damper and additional fire protection and intumescent kit

Dimensions

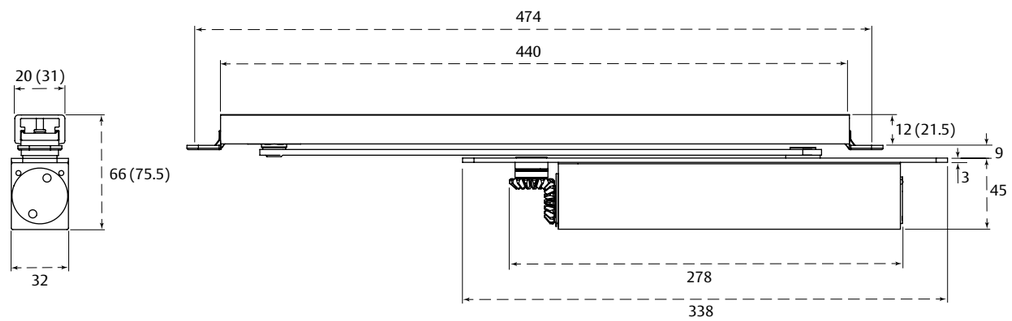

How to order

Order code	Description	Finish
DC840A	Adjustable concealed closer 2-4 with guide rail	SIL

DC860

Concealed door control with Cam-Motion® technology and guide rail.

Features and benefits

- Ideal for applications where aesthetics are paramount
- Helps prevent unauthorised adjustment or tampering of the door control
- High efficiency cam action mechanism for ease of opening, assisting the overall doorset in meeting the requirements of BS 8300
- Mechanical hold open accessory available

Classification code

3 (3/4) | 8 (8) | 5 1 (1-7) | 1 (0/1) | 1 (1) | 3 (0-4)

EN 1154:1996+A1:2002

Testing and certification

UKCA / CE marked	Yes
Certified in compliance with	EN 1154, BS 8300
Suitable for fire doors	Timber FD60, metal FD60/FD90/FD120/FD240. Intumescent protection must be used.
Certifire approval	No
Guarantee	10 years

Specification

Closing force	EN 1-5
Mechanism	Cam action
Closing speed	Variable between 120°-7°
Latching speed	Variable between 7°-0°
Backcheck	Variable above 75°
Delayed action	N/A
Door width up to	1250mm
Maximum door weight	100kg
Height adjustable arm system	14mm
Hold open mode	Hold-open accessory available (A156)
Maximum opening angle	120° (hinge side) / <120° (non-hinge side)
Mounting method	Concealed (50mm minimum leaf)
Handing	Non-handed
Dimensions (H x D x W)	54 x 40 x 290mm
Finish	SIL
Accessories	See door controls accessory section for items such as mechanical hold open device, opening damper and additional fire protection and intumescent kit

Dimensions

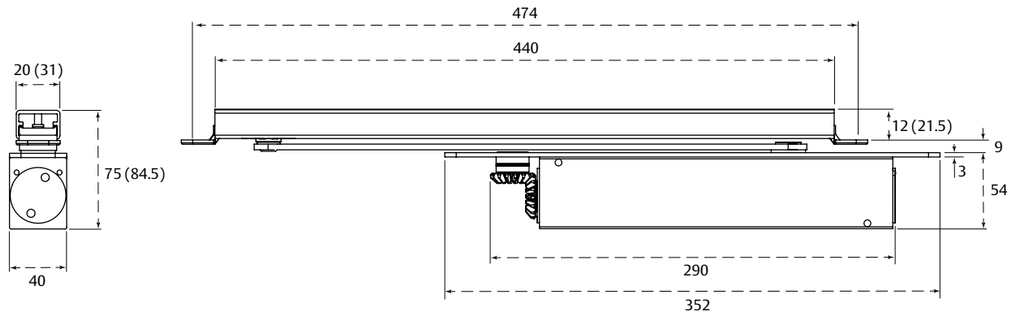

How to order

Order code	Description	Finish
DC860A	Adjustable concealed closer 1-5 with guide rail	SIL

Electromagnetic

Compliant with EN 1155 standards, our electromagnetic door closers are connected to the building's fire or smoke alarm system. When activated, this allows the closer to re-engage and close the door to prevent fire and smoke from spreading.

There are two modes of operation available;

- **Hold-open:** doors are held back out of the way facilitating barrier free access and egress for all. They are released via the fire alarm to ensure fire compartmentation and security.
- **Free-swing:** this allows the door to be operated as though there is no door control attached. Free-swing provides the lowest possible opening forces, this supports the door being used by people with impairments; the old, the young and anyone with a disability. As with hold-open, the normal mode of operation is triggered via the fire alarm.

Range benefits

- Improved end user experience by removing the need to operate a door or reducing the force required
- Offers additional control and function to doors without compromising fire safety
- Unique products enabling customer specific issues to be resolved
- Hold open function enables both barrier and touch free access and egress

ASSA ABLOY
Opening Solutions

DC300G-HF

Rack and pinion electromagnetic door closer featuring both hold-open or free-swing function.

Features and benefits

- Seamlessly changes between hold-open and free-swing functions on site
- Hold-open function allows free flowing movement throughout high traffic buildings such as universities, hospitals and hotels
- Free-swing mode is ideal for use on care home residential doors, or any environment where it is advantageous for doors to feel as though there is no closing force
- Closes safely on activation of the building's fire alarm
- Soft-Motion® is a gentle release system that helps to prevent damage to the doorset and injury to users, extending the lifespan of the doorset and closer

Classification code

3 (3) | 8 (5-8) | 6 3 (3-7) | 1 (1) | 1 (1) | 3 (0-4)

EN 1155:1997+A1:2002

2 YEAR GUARANTEE Electrical | 10 YEAR GUARANTEE Mechanical

Testing and certification

UKCA / CE marked	Yes
Certified in compliance with	EN 1154, EN 1155, BS 8300
Suitable for fire doors	Timber FD30/FD60/FD120, metal FD60/FD90
Certifire approval	No
Guarantee	10 years mechanical, 2 years electrical

Specification

Closing force	EN 3-6
Mechanism	Rack and pinion
Closing speed	Variable between 130°-15°
Latching speed	Variable between 15°-0°
Backcheck	Variable above 75°
Soft-Motion® release	130°- 75°
Manual pull force	< 120Nm
Delayed action	Yes (utilising soft motion release)
Door width up to	1400mm
Maximum door weight	120kg
Height adjustable arm system	14mm
Hold-open mode	Yes
Maximum opening angle	130° (hinge side) / 120° (non-hinge side)
Mounting method	Hinge side, non-hinge side and transom mount
Required power supply	24V DC
Rated current consumption	Ca. 195 mA
Handing	Non-handed
Dimensions (H x D x W)	60 x 52 x 318mm
Finish	SIL, SSS
Accessories	N/A

Dimensions

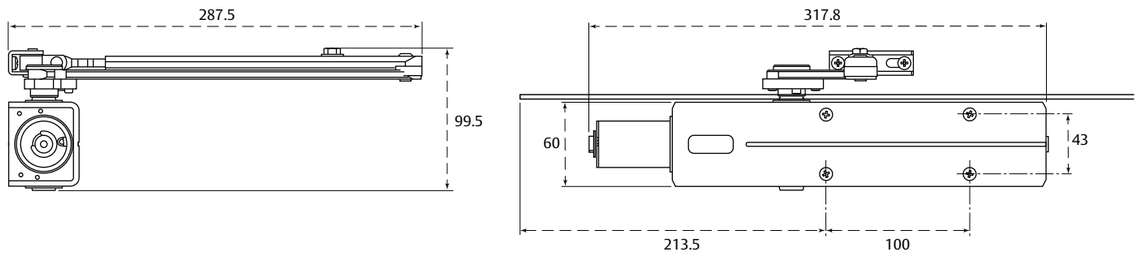

How to order

Order code	Description	Finish
DC300G-HF	Hold-open/ free-swing R&P closer EN3-6	SIL
DC300G-HF/SS	Hold-open/ free-swing R&P closer EN3-6	SSS

ASSA ABLOY
Opening Solutions

DC340TE, with G460

Rack and pinion EN 1-4 variable power hold-open guide rail solution.

Features and benefits

- Cost effective guide rail hold-open solution
- Wiring is mounted in guide rail for a neater aesthetic solution as no door loop is required
- Infinite hold-open angle can be set between 70 and 130 degrees
- Hold-open sets at required angle with no fall back enabling corridor doors to be flush with the wall
- Soft-Motion® is a gentle release system that helps to prevent damage to the doorset and injury to users, extending the lifespan of the doorset and closer

Classification code

3 (3) | 8 (5/8) | 4 1 (3-7) | 1 (1) | 1 (1) | 3 (0-4)

EN 1155:1997+A1:2002

2 YEAR GUARANTEE Electrical | 10 YEAR GUARANTEE Mechanical | EPD®

Testing and certification

UKCA / CE marked	Yes
Certified in compliance with	EN 1154, EN 1155, BS 8300
Suitable for fire doors	Timber FD30/FD60/FD120
Certifire approval	No
Guarantee	10 years mechanical, 2 years electrical

Specification

Closing force	EN 1-4
Mechanism	Rack and pinion
Closing speed	Yes
Latching speed	Yes
Backcheck	N/A
Soft-Motion® release	No
Manual pull force	< 120Nm
Delayed action	No
Door width up to	1100mm
Maximum door weight	80kg
Height adjustable arm system	14mm
Hold-open mode	Yes
Maximum opening angle	130° (hinge side) / 120° (non-hinge side)
Mounting method	Hinge side, non-hinge side
Required power supply	24V DC
Rated current consumption	60 mA
Handing	Non-handed
Dimensions (H x D x W)	308 x 69 x 63mm
Finish	SIL, SSS
Accessories	N/A

Dimensions

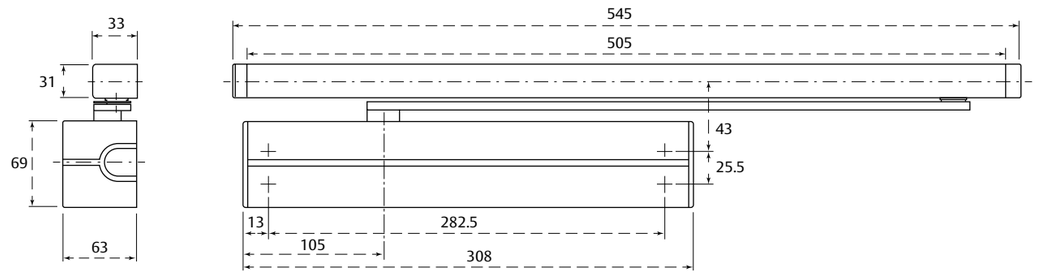

How to order

Order code	Description	Finish
DC340TE	Rack and pinion closer size 1-4 G460 el/mech H/O rail	SIL
DC340TE/SS	Rack and pinion closer size 1-4 G460 el/mech H/O rail	SSS

ASSA ABLOY
Opening Solutions

DC700G-FM

Free-Motion® and Cam-Motion® technology with free-swing function.

Features and benefits

- Cam-Motion® technology assists BS 8300 compliance in either normal or free-swing modes
- Free-Motion® allows doors to remain in a free swinging state without the resistance of the door closer
- Closes automatically when the fire alarm is activated
- Adjustable up to power size EN 6 offering free-swing capability on large doors

Classification code

3 (3) | 8 (5/8) | 6 3 (3-7) | 1 (1) | 1 (1) | 3 (0-4)

EN 1155:1997/A1:2002/AC:2006-02

UK CA CE 2 YEAR GUARANTEE Electrical 10 YEAR GUARANTEE Mechanical EPD®

Testing and certification

UKCA / CE marked	Yes
Certified in compliance with	EN 1154, EN 1155, BS 8300
Suitable for fire doors	Timber FD30
Certifire approval	No
Guarantee	10 years mechanical, 2 years electrical

Specification

Closing force	EN 3-6
Mechanism	Cam action
Closing speed	Variable between 170°-10°
Latching speed	Variable between 10°-0°
Backcheck	Variable above 75°
Delayed action	No
Door width up to	1400mm
Maximum door weight	120kg
Height adjustable arm system	14mm
Required power supply	24 V DC
Max. consumption	90 mA
Maximum opening angle	170°
Mounting method	Hinge side, non-hinge side
Handing	Handed for door or frame install
Dimensions (H x D x W) body	64 x 58 x 327mm
Dimensions (H x D x W) guide rail	31 x 41 x 505mm
Finish	SIL, SSS
Accessories	See door controls accessory section for items such as opening damper and mounting plates

Dimensions

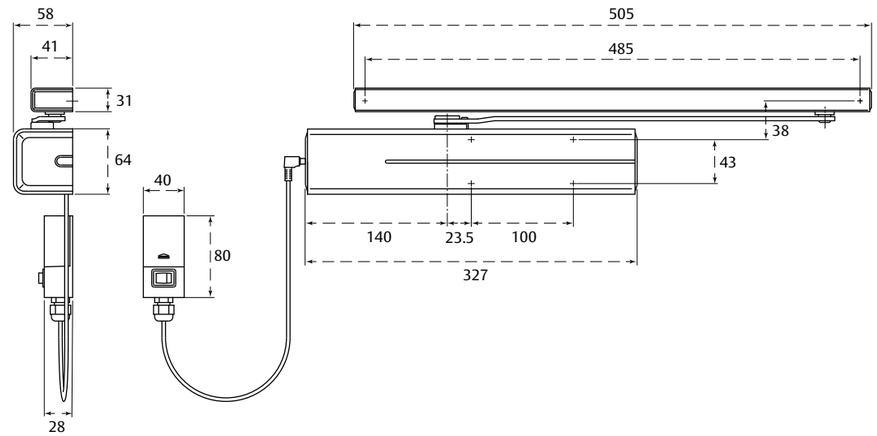

How to order

Order code	Description	Finish
DC700G-FM/DOOR	Free-Motion® and Cam-Motion® adj EN3-6 with backcheck, door mounted, c/w with power loop	SIL
DC700G-FM/DOOR/SS	Free-Motion® and Cam-Motion® adj EN3-6 with backcheck, door mounted, c/w with power loop	SSS
DC700G-FM/FRAME	Free-Motion® and Cam-Motion® adj EN3-6 with backcheck, frame mounted, c/w with power loop	SIL
DC700G-FM/FRAME/SS	Free-Motion® and Cam-Motion® adj EN3-6 with backcheck, frame mounted, c/w with power loop	SSS

ASSA ABLOY
Opening Solutions

Guardian

Cam and roller electromagnetic door closer with unique free-swing features, perfect for care home bedroom doors.

Features and benefits

- Anti-drift technology – prevents the door from uncontrolled movement
- Anti-slam technology – prevents the door from slamming shut, protecting the user (finger trap) and doorset alike
- The unique technologies within the Guardian, coupled with the free-swing functionality, make this ideal where there are users with limitations such as nurseries, care homes and sheltered accommodation
- Free-swing mode is ideal for use on care home residential doors, or any environment where it is advantageous for doors to feel as though there is no closing force
- Closes safely on activation of the building's fire alarm

Classification code

3	8	4	1	1	3
(3)	(5/8)	(3-7)	(1)	(1)	(0-4)

EN 1155:1997+A1:2002

Testing and certification

UKCA / CE marked	Yes
Certified in compliance with	EN 1154, EN 1155, BS 8300
Suitable for fire doors	Timber FD30/FD60/FD120, metal FD60/FD90/FD120/FD240 (fully insulated)
Certifire approval	Yes
Guarantee	2 years

Specification

Closing force	EN 4
Mechanism	Cam and roller
Closing speed	Variable between 130°-15°
Latching speed	Variable between 15°-0°
Backcheck	N/A
Manual pull force	N/A
Delayed action	N/A
Door width up to	1100mm
Maximum door weight	80kg
Height adjustable arm system	No
Hold-open mode	Yes
Maximum opening angle	180°
Mounting method	Hinge side, non-hinge side
Required power supply	24V DC
Rated current consumption	Ca. 95 mA
Handing	Non-handed
Dimensions (H x D x W)	Depending on cover type
Finish	SIL, SSS
Accessories	See door controls accessory section

Dimensions

CODE	H	W	D
9880R	62mm	295mm	53mm
9880SQ	62mm	269mm	50mm
4880L	48mm*	265mm	52mm
4880E	48mm*	265mm	52mm

*Excluding spindle cap

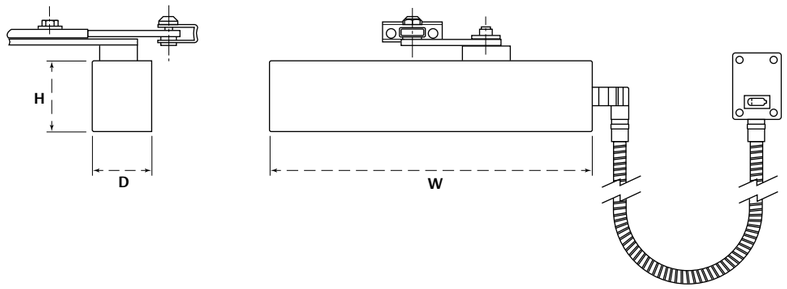

How to order

Order code	Description	Finish
4880E	Guardian – E-slide trim plate	SIL
4880E	Guardian – E-slide trim plate	SSS
4880L	Guardian – L-slide trim plate	SIL
4880L	Guardian – L-slide trim plate	SSS
9880R	Guardian – Radiused cover	SIL
9880R	Guardian – Radiused cover	SSS
9880SQ	Guardian – Square (linear) cover	SIL
9880SQ	Guardian – Square (linear) cover	SSS

ASSA ABLOY
Opening Solutions

4870/9870

Cam and roller electromagnetic door closer featuring both hold-open or free-swing function.

Features and benefits

- Seamlessly changes between hold-open and free-swing functions on site
- Hold-open function allows free flowing movement throughout high traffic buildings such as universities, hospitals and hotels
- Free-swing mode is ideal for use on care home residential doors, or any environment where it is advantageous for doors to feel as though there is no opening or closing force
- Closes safely on activation of the building's fire alarm

Classification code

3	8	4	1	1	3
(3)	(5/8)	(3-7)	(1)	(1)	(0-4)

EN 1155:1997+A1:2002

Testing and certification

UKCA / CE marked	Yes
Certified in compliance with	EN 1154, EN 1155, BS 8300
Suitable for fire doors	Timber FD30/FD60/FD120, metal FD60/FD90/FD120/FD240 (fully insulated)
Certifire approval	Yes
Guarantee	2 years

Specification

Closing force	EN 4
Mechanism	Cam and roller
Closing speed	Variable between 130°-15°
Latching speed	Variable between 15°- 0°
Backcheck	N/A
Manual pull force	<120Nm
Delayed action	N/A
Door width up to	1100mm
Maximum door weight	80kg
Height adjustable arm system	14mm
Hold-open mode	Yes
Maximum opening angle	180°
Mounting method	Hinge side, non-hinge side and transom mount
Required power supply	24V DC
Rated current consumption	Ca. 95 mA
Handing	Non-handed
Dimensions (H x D x W)	Depending on cover type
Finish	SIL, SSS
Accessories	See door controls accessory section

Dimensions

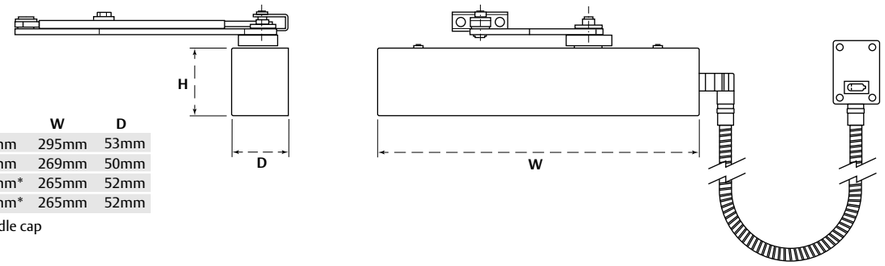

CODE	H	W	D
9870R	62mm	295mm	53mm
9870SQ	62mm	269mm	50mm
4870L	48mm*	265mm	52mm
4870E	48mm*	265mm	52mm

*Excluding spindle cap

How to order

Order code	Description	Finish
4870E	Free-swing / hold-open EN4 closer – E-slide trim plate	SIL
4870E	Free-swing / hold-open EN4 closer – E-slide trim plate	SSS
4870L	Free-swing / hold-open EN4 closer – L-slide trim plate	SIL
4870L	Free-swing / hold-open EN4 closer – L-slide trim plate	SSS
9870R	Free-swing / hold-open EN4 closer – Radiused cover	SIL
9870R	Free-swing / hold-open EN4 closer – Radiused cover	SSS
9870SQ	Free-swing / hold-open EN4 closer – Square (linear) cover	SIL
9870SQ	Free-swing / hold-open EN4 closer – Square (linear) cover	SSS

G460 guide rail

Electromagnetic hold-open device compatible with DC500 and DC700 Cam-Motion® technology door closers.

Features and benefits

- Standard mounting position on hinge side and non-hinge side
- Suitable for fire and smoke protection doors
- Operating force can be adjusted to suit door construction requirements and user needs
- Hold-open sets at required angle with no fall-back enabling corridor doors to be flush with the wall

Classification code

When fitted with DC700 body

3 (3) | 8 (5/8) | 6 3 (3-7) | 1 (1) | 1 (1) | 3 (0-4)

EN 1155:1997+A1:2002

2 YEAR GUARANTEE Electrical | 10 YEAR GUARANTEE Mechanical

Testing and certification

UKCA / CE marked	Yes
Certified in compliance with	EN 1155, BS 8300
Suitable for fire doors	Timber FD30/FD60/FD120
Certifire approval	No
Guarantee	10 years mechanical, 2 years electrical

Specification

Closing force	DC700 = EN 3-6 / DC500 = EN 1-4
Mechanism	Cam action
Door width up to	DC700 = 1400mm / DC500 = 1100mm
Maximum door weight	DC700 = 120kg / DC500 = 80kg
Hold-open mode	Yes
Maximum opening angle	70°-130° (continuously adjustable) 70°-120° (non-hinge side)
Mounting method	Hinge side, non-hinge side
Required power supply	24 V DC
Max. consumption	60 mA
Handing	Non-handed
Dimensions (H x D x W)	31 x 33 x 545mm
Finish	SIL, SSS
Accessories	See door controls accessory section for items such as alternative brackets, release button and opening damper

Dimensions

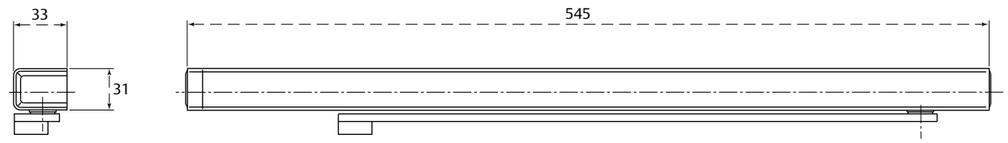

How to order

Order code	Description	Finish
G460	Electromagnetic hold open guide rail	SIL
G460/SS	Electromagnetic hold open guide rail	SSS

ASSA ABLOY
Opening Solutions

G461 guide rail

EN 1158 coordinating device compatible with DC500 and DC700 Cam-Motion® technology door closers.

Features and benefits

- Coordinates double doorsets
- Correct closing sequence guaranteed in every situation
- Operates independently of the door closer, offering the best possible combination of function, safety and reliability

Classification code

When fitted with DC700 body

3	8	6	1	1	3
(3)	(5/8)	3 (3-7)	(0/1)	(1)	(0-4)

EN 1158:1997+A1:2002

Testing and certification

UKCA / CE marked	Yes
Certified in compliance with	EN 1158
Suitable for fire doors	Timber FD30/FD60/FD120
Guarantee	10 years

Specification

Closing force	DC700 = EN 3-6 / DC500 = EN1-4
Mechanism	Rail for use with Cam-Motion® closer bodies
Door width up to	DC700 = 1400mm / DC500 = 1100mm
Suitable for double leaf doors	1350 - 2500mm hinge side (min, max) 1400 - 2800mm non-hinge side (min, max)
Maximum door weight	DC700 =120kg / DC500 = 80kg
Maximum opening angle	Active leaf 170° (hinge side); 105° (non-hinge side) Inactive leaf 170° (hinge side); 115° (non-hinge side)
Mounting method	Hinge side , non-hinge side (requires G120 accessory)
Handing	Non-handed
Dimensions (H x D x W)	31 x 34 x (dictated by door set width)
Finish	SIL, SSS
Accessories	See door controls accessory section for items such as alternative arm, coordinator carry bar, hold open device, brackets, release button and opening damper

Dimensions

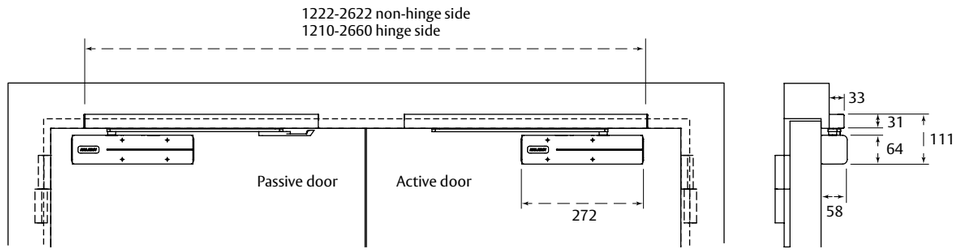

How to order

Order code	Description	Finish
G461	G461 Double door coordinator	SIL
G461/SS	G461 Double door coordinator	SSS

ASSA ABLOY
Opening Solutions

G462 and G464 door coordinator

Integrated mechanical door coordinator and electromagnetic hold-open device(s), compatible with DC500 and DC700 Cam-Motion® technology door closers.

Features and benefits

- Suitable for double door leaf applications
- Operates independently of door closers to offer the best possible combination of function, safety and reliability
- Correct closing sequence guaranteed, with the inactive leaf closing fully before active leaf starts to close

Classification code

When fitted with DC700 body

3 (3) | 8 | 6 3 (3-7) | 1 (0/1) | 1 (1) | 3 (0-4)

EN 1158:1997+A1:2002

3 (3) | 8 (5/8) | 6 3 (3-7) | 1 (1) | 1 (1) | 3 (0-4)

EN 1155:1997+A1:2002

Testing and certification

UKCA / CE marked	Yes
Certified in compliance with	EN 1155, EN 1158, BS 8300
Suitable for fire doors	Timber FD30/FD60/FD120
Guarantee	2 years

Specification

Closing force	DC700 = EN 3-6 / DC500 = EN 1-4
Suitable for double leaf doors	1350 - 2500mm hinge side (min, max) 1400 - 2800mm non-hinge side (min, max)
Maximum door weight	DC700 = 120kg / DC500 = 80kg
Maximum opening angle	Active leaf 170° (hinge side); 105° (non-hinge side) Inactive leaf 170° (hinge side); 115° (non-hinge side)
Mounting method	Hinge side , non-hinge side (requires G120 accessory)
Required power supply	24 V DC
Max. consumption	60 mA
Handing	Non-handed
Dimensions (H x D x W)	31 x 34 x (dictated by door set width)
Finish	SIL, SSS
Accessories	See door controls accessory section for items such as alternative arms, coordinator carry bar, opening damper mounting plates and brackets

Dimensions

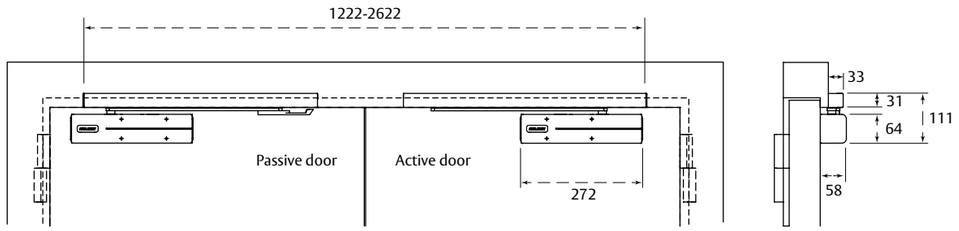

How to order

Order code	Description	Finish
G462	G462 double door coordinator	SIL
G462/SS	G462 double door coordinator	SSS
G464	G464 double door coordinator 2 x hold open units	SIL
G464/SS	G464 double door coordinator 2 x hold open units	SSS

G880 hold-open device

Electromagnetic hold-open device compatible with DC840 and DC860 concealed Cam-Motion® door controls.

Features and benefits

- Suitable for fire and smoke protection doors
- Operating force can be adjusted to suit door construction requirements and user needs
- Hold-open can be set at the required angle, with no fall back, enabling corridor doors to be flush with the wall
- All wiring hidden from view, so more aesthetically pleasing and reduced risk of abuse

Classification code

When fitted with DC860 body

3 (3) | 8 (5/8) | 5 3 (3-7) | 1 (1) | 1 (1) | 3 (0-4)

EN 1155:1997+A1:2002

Testing and certification

UKCA / CE marked	Yes
Certified in compliance with	EN 1155
Suitable for fire doors	Timber FD30/FD60/FD120, metal FD120
Certifire approval	No
Guarantee	2 years

Specification

Closing force	DC840 = EN 1-4 / DC860 = EN 1-5
Mechanism	Rail for use with concealed Cam-Motion® bodies
Door width up to	DC840 = 1100mm / DC860 = 1250mm
Maximum door weight	DC840 = 80kg / DC860 = 100kg
Hold-open mode	Yes
Maximum opening angle	70°-130° (continuously adjustable) 70°-120° (non-hinge side)
Mounting method	Hinge side, non-hinge side
Required power supply	24 V DC
Max. consumption	60 mA
Handing	Non-handed
Dimensions (H x D x W)	30 x 26 x 480mm
Finish	SIL
Accessories	See door controls accessory section for additional fire protection

Dimensions

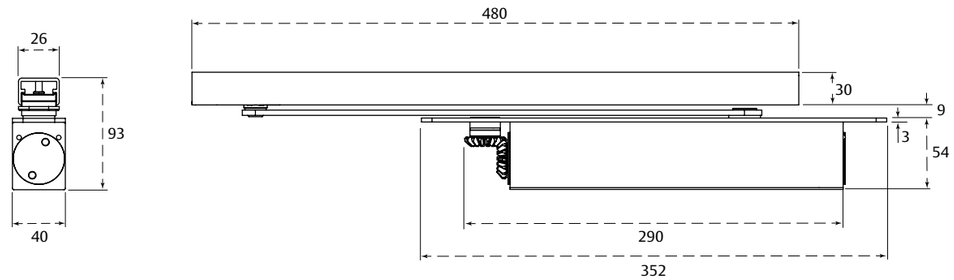

How to order

Order code	Description	Finish
G880	Concealed electromagnetic hold-open guide rail	SIL

ASSA ABLOY
Opening Solutions

G881 door coordinator

Integrated mechanical coordinator, compatible with DC840 and DC860 concealed Cam-Motion door closers.

Features and benefits

- Coordinates double doorsets
- Correct closing sequence guaranteed in every situation
- Operates independently of the door closer, offering the best possible combination of function, safety and reliability

Classification code

When fitted with DC860 body

3	8	5 3	1	1	0
(3)	(5/8)	(3-7)	(0/1)	(1)	(0-4)

EN 1158:1997+A1:2002

Testing and certification

UKCA / CE marked	Yes
Certified in compliance with	EN 1158, BS 8300
Suitable for fire doors	Timber FD30/FD60, metal FD60
Guarantee	10 years

Specification

Closing force	DC840 = EN 2-4 / DC860 = EN 3-5
Mechanism	Rail for use with concealed Cam-Motion® bodies
Door width up to	DC840 = 1100mm / DC860 = 1250mm
Suitable for double leaf doors	1350 - 2500mm hinge side (min, max) 1400 - 2800mm non-hinge side (min, max)
Maximum door weight	DC840 = 80kg / DC860 = 100kg
Maximum opening angle	Active leaf 130° (hinge side) 105° (non-hinge side) Inactive leaf 130° (hinge side) 115° (non-hinge side)
Mounting method	Concealed
Handing	Non-handed
Dimensions (H x D x W)	31 x 34 x (defined by door set width)
Finish	SIL
Accessories	See door controls accessory section for items such as coordinating carry bar, mechanical hold open, opening damper and additional fire protection

Dimensions

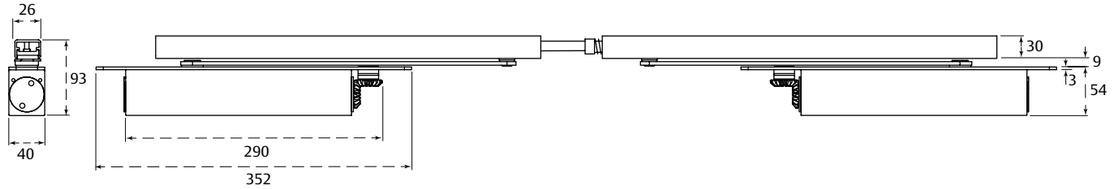

How to order

Order code	Description	Finish
G881	Door coordinator for DC840 and DC860	SIL

ASSA ABLOY
Opening Solutions

G882 and G884 double door coordinator

Integrated mechanical coordinator and two electromagnetic hold-open devices, compatible with DC840 and DC860 concealed Cam-Motion® door closers.

Features and benefits

- Suitable for double door leaf applications
- Operates independently of door closer to offer the best possible combination of function, safety and reliability
- Correct closing sequence guaranteed, with the inactive leaf closing fully before the active leaf starts to close
- Ideal for rebated double door applications, where doors need to be held open in normal use

Classification code

When fitted with DC860 body

3 (3) | 8 (5/8) | 5 3 (3-7) | 1 (0/1) | 1 (1) | 0 (0-4)

EN 1158:1997+A1:2002

3 (3/4) | 8 (5/8) | 5 3 (3-7) | 1 (1) | 1 (1) | 0 (0-4)

EN 1155:1997+A1:2002

Testing and certification

UKCA / CE marked	Yes
Certified in compliance with	EN 1155, EN 1158, BS 8300
Suitable for fire doors	Timber FD30/FD60
Guarantee	2 years

Specification

Closing force	DC840 = EN 2-4 / DC860 = EN 3-5
Suitable for double leaf doors	1350 - 2500mm hinge side (min, max) 1400 - 2800mm non-hinge side (min, max)
Maximum door weight	120kg
Maximum opening angle	Active leaf 130° (hinge side) 105° (non-hinge side) Inactive leaf 130° (hinge side) 115° (non-hinge side)
Mounting method	Concealed
Hold-open	Yes
Required power supply	24 V DC
Max. consumption	60 mA
Handing	Non-handed
Dimensions (H x D x W)	31 x 34 x (width defined by door width)
Finish	SIL
Accessories	See door controls accessory section for items such as coordinating carry bar and additional fire protection

Dimensions

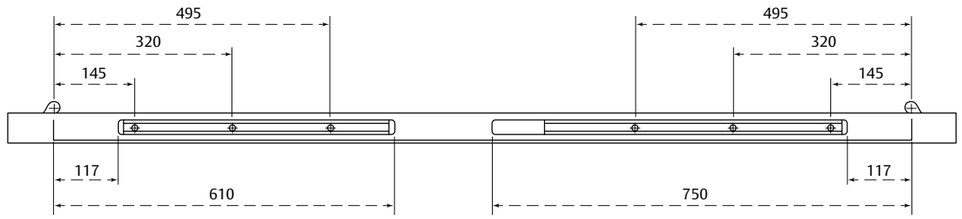

How to order

Order code	Description	Finish
G882	Concealed guide rail double door coordinator 2 x el-mech hold-open	SIL
G884	Concealed guide rail double door coordinator and 1 el-mech hold-open	SIL

Transom closers

Traditionally associated with aluminium systems, when fire rated they also offer reliable closing for timber or metal doors. This is particularly beneficial in place of floor springs where a project does not allow for floor mounting.

Designed to fit in the door frame at the head of the door, transom closers benefit from being hidden from view and are able to cope with heavier doors. Additionally, the cam design makes them suitable for high traffic locations and with hold-open options, they assist in making buildings barrier free.

The DC6113 is the slimmest transom door closer on the market that can help a doorset to meet BS 8300 and approved document M at EN power size 3, meaning heavier doors are easier to open but can still safely close. The range also includes the 1470 electromagnetic double action transom closer offering discrete and convenient hold-open functionality allowing high traffic flow in busy areas without compromising safety.

Range benefits

- Helps doorsets meet the requirements of BS 8300
- Free passage around buildings
- Slimline profile making it compatible with most profiles and sections
- Concealed to be aesthetically pleasing and offer a reduction in the ability to tamper or disable
- Can accommodate heavier leaf weights than surface mounted equivalents
- Full range of accessories available separately enabling you to tailor the door's operation

ASSA ABLOY
Opening Solutions

DC6113

Fixed power size 3 slimline transom mounted door closer.

Features and benefits

- The narrow profile provides compatibility with all aluminium profile sections including slimline
- Low opening forces to comply with access and egress legislation assisting the overall doorset in meeting the requirements of BS 8300
- Unique detachable spindle, available separately, featured with a range of height options for easier selection and installation

Classification code

Non hold-open

3	8	3	1	1	4
(3/4)	(8)	(1-7)	(0/1)	(1)	(0-4)

EN 1154:1996+A1:2002

Testing and certification

UKCA / CE marked	Yes (non hold-open variant only)
Certified in compliance with	EN 1154, BS 8300
Suitable for fire doors	Timber FD60 (non hold-open variant only)
Certifire approval	No
Guarantee	10 years

Specification

Closing force	EN 3
Mechanism	Cam action
Closing speed	165°-15°
Latching speed	15°-0°
Backcheck	Yes (self-regulating)
Delayed action	No
Door width up to	950mm for fire doors
Hold-open mode	Hold-open variant available – not suitable for fire doors
Maximum opening angle	165°
Mounting method	Transom
Handing	Non-handed
Dimensions (H x D x W)	39 x 92.6 x 264mm
Finish	See door controls accessory section for finish choice
Accessories	See door controls accessory section for items such as arms, alternative height spindles and heavy duty pivot

Dimensions

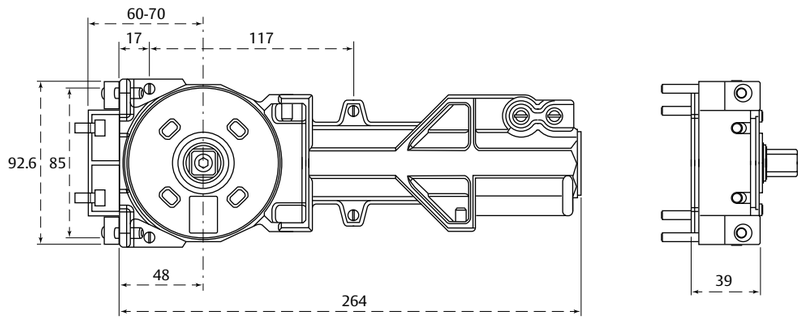

How to order

Order code	Description	Finish
DC6113 -311-0000	Non hold-open size 3 transom (body only)	N/A
DC6113 -312-0000	Hold-open size 3 transom (body only)	N/A

Select required arms, pivots, spindles etc. from door controls accessory section

ASSA ABLOY
Opening Solutions

1470

Fixed power size 4 heavy duty electromagnetic hold-open transom mounted door closer.

Features and benefits

- Electromagnetic hold-open provides a compliant solution for holding open doors
- Double action compatible
- Highest build quality and component strength makes it suitable for heavy duty doors
- Compatible floor pivot also available

2 YEAR GUARANTEE Electrical

10 YEAR GUARANTEE Mechanical

Testing and certification

UKCA / CE marked	No
Certified in compliance with	No
Suitable for fire doors	No
Certifire approval	No
Guarantee	10 years mechanical, 2 years electrical

Specification

Closing force	EN 4
Mechanism	Cam action
Closing speed	180°-15°
Latching speed	15°-0°
Backcheck	Yes
Delayed action	No
Door width up to	1100mm for fire doors
Hold-open mode	Electromagnetic (24v)
Maximum opening angle	180° - allow 5° fallback for max hold open angle
Mounting method	Transom
Handing	Non-handed
Dimensions (H x D x W)	58 x 68 x 330mm
Finish	N/A
Accessories	See door controls accessory section for items such as side and end load arms, floor pivots and spindles

Dimensions

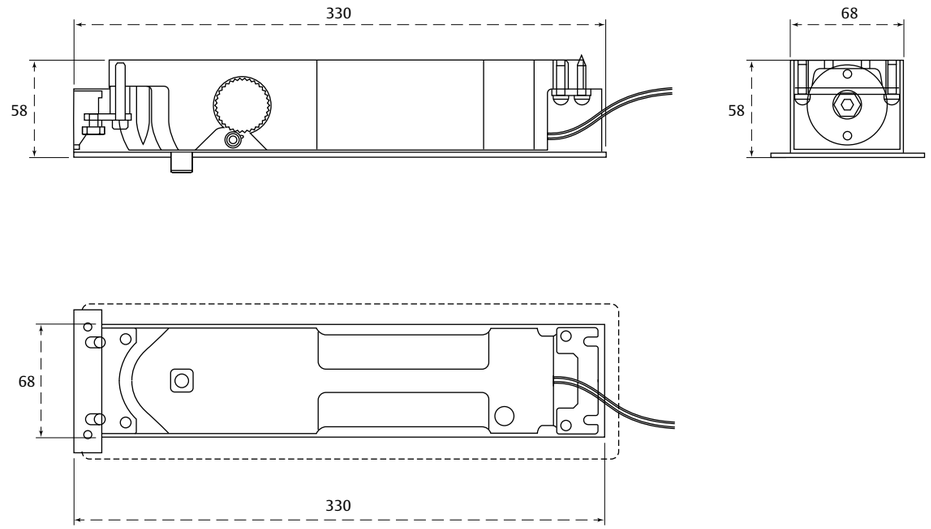

How to order

Order code	Description	Finish
1470	Hold-open size 4 electromagnetic transom closer (body only)	N/A

Select required arms, pivots, spindles etc. from door controls accessory section

Floor springs

Floor spring door controls are concealed under the finished floor level to offer control to your door with the unit hidden from view. They are especially suited to areas with high traffic as well as heavier doorsets.

Available with single or double action operation to ensure a projects design criteria can be met.

Our floor spring range can be selected with or without hold-open function. Mechanical hold-open function is suited for use on non-fire doors where it is beneficial for the doors to be held in the open position and can be set at either 90°, 120° or 105°. Electromagnetic hold-open function is approved for use on fire doors where it is beneficial for the doors to be held in the open position.

We offer a full range of accessories including single and double action arms and pivots, stainless steel, polished stainless steel and brass finish top plates as well as a sealing compound.

Range benefits

- Enhanced durability of one million cycles guaranteeing long life performance
- Ideal for use on heavier doorsets and high traffic areas
- Cam-Motion® technology for easier opening and accessibility
- Electromagnetic option for perfect balance of fire safety and convenient movement around buildings
- Multiple high end finishes to compliment the surroundings
- Full range of accessories available separately enabling you to tailor the door's operation

ASSA ABLOY
Opening Solutions

DC450

Fixed power size 4 floor spring with Cam-Motion® technology and fixed closing force.

Features and benefits

- With a shallow profile, this unit is ideal for use when working with a thin floor base
- Adjustable door speed and latching speed from top regulating valves
- Suitable for fire and smoke protection doors, particularly for double action glass door applications
- Large scope of adjustment within the cement box to solve possible on-site alignment issues without taking down the door

Classification code

Non hold-open

3	8	4	1	1	4
(3/4)	(8)	(1-7)	(0/1)	(1)	(0-4)

EN 1154:1996+A1:2002

Hold-open

3	8	4	0	1	4
(3/4)	(8)	(1-7)	(0/1)	(1)	(0-4)

EN 1154:1996/A1:2002/AC:2006

Testing and certification

UKCA / CE marked	Yes
Certified in compliance with	EN 1154, BS 8300
Suitable for fire doors	Metal FD60 (non hold-open model only)
Certifire approval	No
Guarantee	10 years

Specification

Closing force	EN 4
Mechanism	Cam action
Closing speed	Variable between 130°- 15°
Latching speed	Variable between 15°- 0°
Backcheck	Yes
Delayed action	No
Door width up to	1100mm
Maximum door weight	120kg
Height adjustable cement box	Yes all directions
Hold-open / Non- hold-open model	Hold-open model – 90° / 105° Non hold-open model – none NB Hold-open model not suitable for use on fire doors
Maximum opening angle	130° (hinge side)
Cement box	Hot zinc plated / height = 40mm
Body adjustment within cement box	Vertical = 2mm; side = 6mm; front = 7mm; angular = 4°
Required floor depth	40mm
Handing	Non-handed
Dimensions (H x D x W)	40 x 108 x 277mm
Finish	See door controls accessory section for finish choice
Accessories	See door controls accessory section for items such as cover plates, double action fittings and alternative height spindles

Dimensions

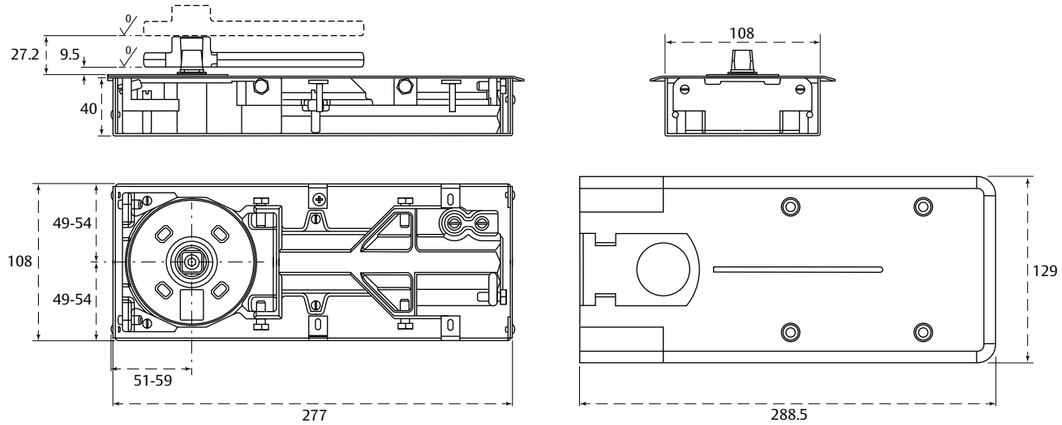

How to order

Order code	Description	Finish
DC450	Hold-open floor spring power size 4 (mechanism and floor box only)	N/A
DC450/NHO	Non hold-open floor spring power size 4 (mechanism and floor box only)	N/A

Select required cover plate and spindles etc from door controls accessory section

ASSA ABLOY
Opening Solutions

DC477

Adjustable power size 2-4 floor spring with Cam-Motion® technology and adjustable closing force for heavy doors.

Features and benefits

- Ideal for residential interiors due to its adjustable opening and closing force
- Uses Cam-Motion® technology for easier door opening and improved accessibility
- Backcheck feature offers optimum protection for doors and walls

Classification code

Non hold-open

3 (3/4) | 8 (8) | 4 2 (1-7) | 1 (0/1) | 1 (1) | 4 (0-4)

EN 1154:1996+A1:2002

Hold-open

3 (3/4) | 8 (8) | 4 2 (1-7) | 0 (0/1) | 1 (1) | 4 (0-4)

EN 1154:1996/A1:2002/AC:2006

Testing and certification

UKCA / CE marked	Yes
Certified in compliance with	EN 1154, BS 8300
Suitable for fire doors	Metal FD30 (non hold-open variant only)
Certifire approval	No
Guarantee	10 years

Specification

Closing force	EN 2-4
Mechanism	Cam action
Closing speed	Variable between 150°- 15°
Latching speed	Variable between 15° - 0°
Backcheck	Mechanical
Delayed action	No
Door width up to	1100mm
Maximum door weight	170kg
Height adjustable cement box	Yes all directions
Hold-open / Non- hold-open model	Hold-open model – 90° / 105° Non hold-open model – none NB Hold-open model not suitable for use on fire doors
Maximum opening angle	170° (hinge side)
Cement box	Hot zinc plated / height = 40mm
Body adjustment within cement box	Vertical = 9mm; side = 4mm; front = 10mm; angular = 4°
Required floor depth	70mm
Handing	Non-handed
Dimensions (H x D x W)	70 x 110 x 277mm
Finish	See door controls accessory section for finish choice
Accessories	See door controls accessory section for items such as cover plates, double action fittings and alternative height spindles

Dimensions

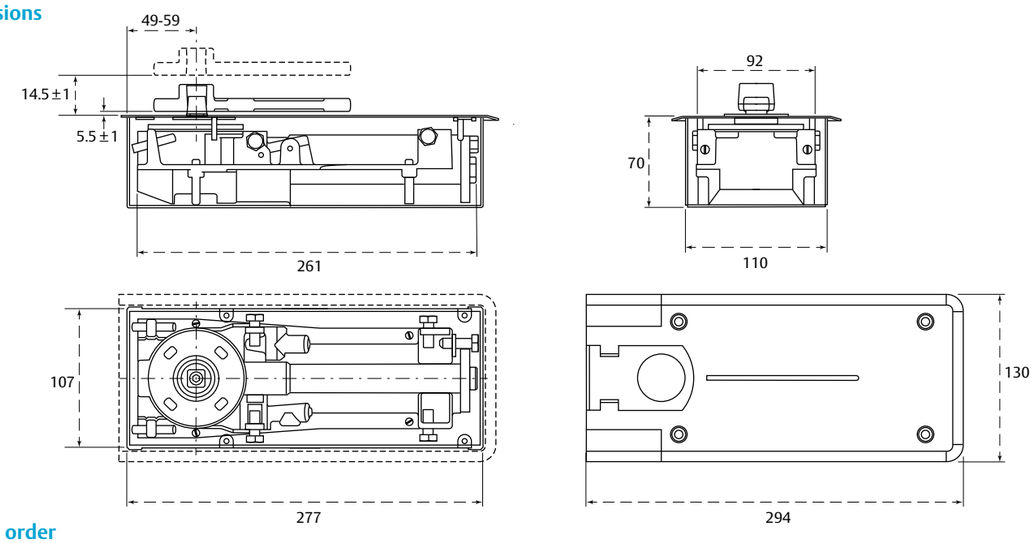

How to order

Order code	Description	Finish
DC477	Hold-open floor spring EN2-4 (mechanism and floor box only)	N/A
DC477/NHO	Non hold-open floor spring EN2-4 (mechanism and floor box only)	N/A

Select required cover plate and spindles etc from door controls accessory section

ASSA ABLOY
Opening Solutions

DC475

Adjustable power size 3-6 floor spring with Cam-Motion® technology and adjustable closing force for large or very heavy doors.

Features and benefits

- Ideal for residential interiors due to its adjustable opening and closing force
- Uses Cam-Motion® technology for easier door opening and improve accessibility
- Backcheck feature offers optimum protection for doors and walls

Classification code

Non hold-open

3	8	6	1	1	4
(3/4)	(8)	3 (1-7)	(0/1)	(1)	(0-4)

EN 1154:1996+A1:2002

Hold-open

3	8	6	0	1	4
(3/4)	(8)	3 (1-7)	(0/1)	(1)	(0-4)

EN 1154:1996/A1:2002/AC:2006

Testing and certification

UKCA / CE marked	Yes
Certified in compliance with	EN 1154, BS 8300
Suitable for fire doors	Metal FD60 (non-hold open model only)
Certifire approval	No
Guarantee	10 years

Specification

Closing force	EN 3-6
Mechanism	Cam action
Closing speed	Variable between 175° - 15°
Latching speed	Variable between 15° - 0°
Backcheck	Mechanical
Delayed action	No
Door width up to	1400mm
Maximum door weight	300kg
Height adjustable cement box	Yes all directions
Hold-open / Non- hold-open model	Hold-open model – 90° / 105° Non hold-open model – none NB Hold-open model not suitable for use on fire door
Maximum opening angle	175° (hinge side)
Cement box	Hot zinc plated / height = 40mm
Body adjustment within cement box	Vertical = 9mm; side = 6mm; front = 5mm; angular = 2°
Required floor depth	82mm
Handing	Non-handed
Dimensions (H x D x W)	82 x 78 x 345mm
Finish	See door controls accessory section for finish choice
Accessories	See door controls accessory section for items such as cover plates, double action fittings and alternative height spindles

Dimensions

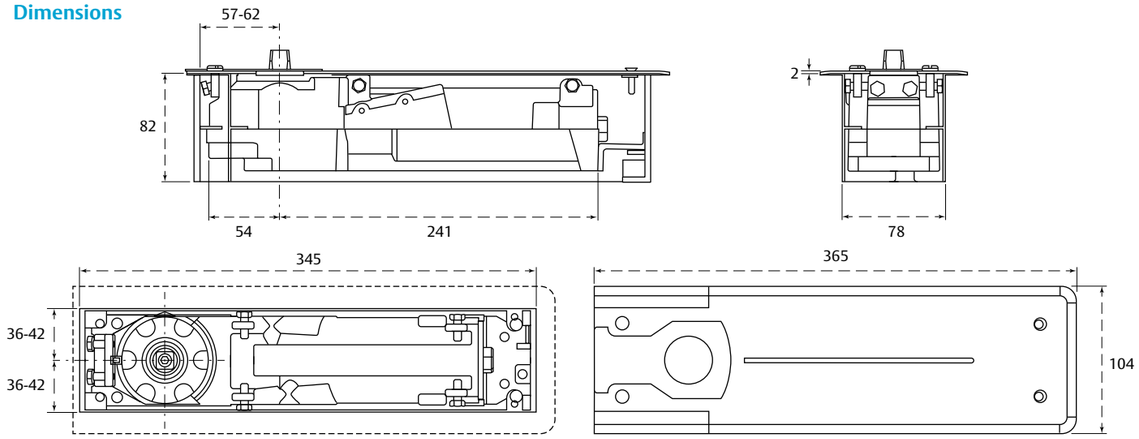

How to order

Order code	Description	Finish
DC475	Hold-open floor spring EN3-6 (mechanism and floor box only)	N/A
DC477/NHO	Non hold-open floor spring EN3-6 (mechanism and floor box only)	N/A

Select required cover plate and spindles etc from door controls accessory section

ASSA ABLOY
Opening Solutions

2000 series

Adjustable power size 1-4 floor spring with Cam-Motion® technology and adjustable closing force for large or heavy doors up to 400kg.

Features and benefits

- Suitable for use on doors up to 400kg
- Adjustable power size 1-4
- Highly efficient double cam mechanism
- Three-dimensional in-box adjustment with visual spirit level fitting aid

Classification code

2950 only

3 (3/4) | 8 (8) | 4 1 (1-7) | 1 (0/1) | 1 (1) | 3 (0-4)

EN 1154:1996/A1:2002/AC:2006

Testing and certification

UKCA / CE marked	Yes (2950 only)
Certified in compliance with	EN 1154, BS 8300
Suitable for fire doors	Timber FD30/FD60/FD120, metal FD60/FD90/FD120/FD240 (2950 only)
Certifire approval	Yes (2950 only)
Guarantee	10 years

Specification

Closing force	EN 1-4
Mechanism	Cam action
Closing speed	Variable between 175° - 15°
Latching speed	Variable between 15° - 0°
Backcheck	Mechanical
Delayed action	No
Door width up to	1100mm
Maximum door weight	400kg
Height adjustable cement box	Yes all directions
Hold-open mode	None or 90° / 105° / 120° NB hold-open not suitable for use on fire doors
Maximum opening angle	180°
Cement box	Hot zinc plated / height = 50mm
Body adjustment within cement box	Vertical = 9mm; side = 6mm; front = 5mm; angular = 2°
Required floor depth	82mm
Handing	Non-handed
Dimensions (H x D x W)	50 x 78 x 307mm
Finish	See door controls accessory section for finish choice
Accessories	See door controls accessory section for items such as cover plates, double action fittings and alternative height spindles

Dimensions

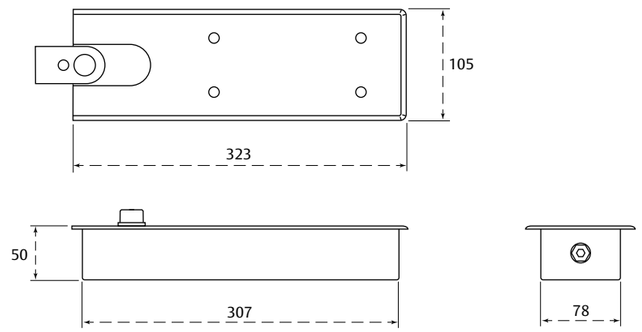

How to order

Order code	Description	Finish
2950	EN 1-4 non hold open floor spring with back check	N/A
2952	EN 1-4 hold open 90°/120° floor spring	N/A
2960	EN 1-4 non hold open floor spring with back check and delayed action	N/A

Select required cover plate and spindles etc from door controls accessory section

ASSA ABLOY
Opening Solutions

900 series

Adjustable power size 1-6 floor spring with Cam-Motion® technology and adjustable closing force for large or very heavy doors up to 600kg.

Features and benefits

- Outstanding capacity heavy duty floor spring, suitable for doors up to 600kg
- Adjustable power size 1-6
- Single or double action door compatibility
- Highly efficient double cam mechanism
- Unique 3° leading edge adjustment for improved alignment
- Three-dimensional in-box adjustment with visual spirit level fitting aid
- UL listed

Classification code

990 only

3 (3/4) | 8 (8) | 6 1 (1-7) | 1 (0/1) | 1 (1) | 3 (0-4)

EN 1154:1996/A1:2002/AC:2006

Testing and certification

UKCA / CE marked	Yes (990 only)
Certified in compliance with	EN 1154, BS 8300
Suitable for fire doors	Timber FD30/FD60/FD120, metal FD60/FD90/FD120/FD240 (990 only)
Certifire approval	Yes (990 as double action application only)
Guarantee	10 years

Specification

Closing force	EN 1-6
Mechanism	Cam action
Closing speed	Variable between 175° - 15°
Latching speed	Variable between 15° - 0°
Backcheck	Mechanical
Delayed action	No
Door width up to	1400mm
Maximum door weight	600kg
Height adjustable cement box	Yes all directions
Hold-open mode	None or 90° / 105° / 120° dependent on model NB hold-open not suitable for use on fire doors
Maximum opening angle	175° (hinge side)
Cement box	Hot zinc plated / height = 60mm
Body adjustment within cement box	Vertical = 9mm; side = 6mm; front = 5mm; angular = 2°
Required floor depth	82mm
Handing	Non-handed
Dimensions (H x D x W)	60 x 78 x 307mm
Finish	See door controls accessory section for finish choice
Accessories	See door controls accessory section for items such as cover plates, double action fittings and alternative height spindles

Dimensions

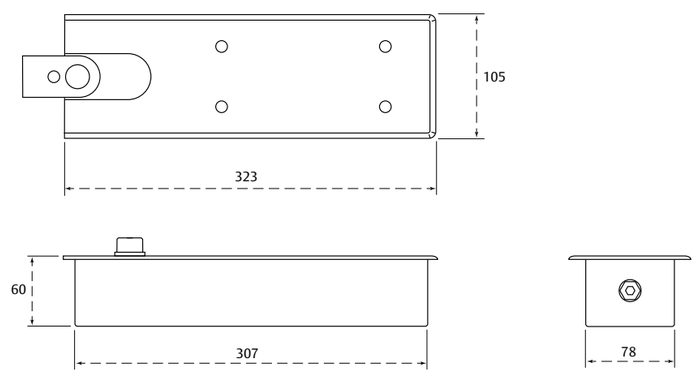

How to order

Order code	Description	Finish
990	EN 1-6 non hold-open floor spring with back-check	N/A
991	EN 1-6 non hold-open floor spring with back-check and delayed action	N/A
993	EN 1-6 hold open 90° /120° floor spring	N/A
994	EN 1-6 hold open 105° floor spring	N/A
995	EN 1-6 non hold-open floor spring with heavy duty back-check	N/A

Select required cover plate and spindles etc from door controls accessory section

ASSA ABLOY
Opening Solutions

3470

Fixed power size 4 heavy duty electromagnetic hold-open floor spring.

Features and benefits

- EN 1155 electromagnetic hold-open provides a compliant solution for holding open fire doors or added convenience for non-fire doors
- Single or double action compatible
- Highest build quality and component strength allows for door leaves up to 400kg
- Fully tested compatible floor pivot also available

Classification code

3 (3) | 8 (5/8) | 4 (3-7) | 1 (1) | 1 (1) | 3 (0-4)

EN 1155:1996/A1:2002/AC:2006

2 YEAR GUARANTEE Electrical
10 YEAR GUARANTEE Mechanical

certifire

Testing and certification

UKCA / CE marked	Yes
Certified in compliance with	EN 1154, EN 1155, BS 8300 (hold-open mode)
Suitable for fire doors	Timber FD30/FD60, metal FD60/FD90/FD120/FD240
Certifire approval	Yes
Guarantee	10 years mechanical, 2 years electrical

Specification

Closing force	EN 4
Mechanism	Cam action
Closing speed	175° - 15°
Latching speed	15° - 0°
Backcheck	Yes
Delayed action	No
Door width up to	1100mm for fire doors
Maximum door weight	400kg
Height adjustable cement box	Yes all directions
Hold-open mode	Electromagnetic (24v) over 80°-180°
Maximum opening angle	180°
Handing	Non-handed
Dimensions (H x D x W)	60 x 78 x 307mm
Finish	See door controls accessory section for finish choice
Accessories	See door controls accessory section for items such as cover plates, double action fittings and alternative height spindles

Dimensions

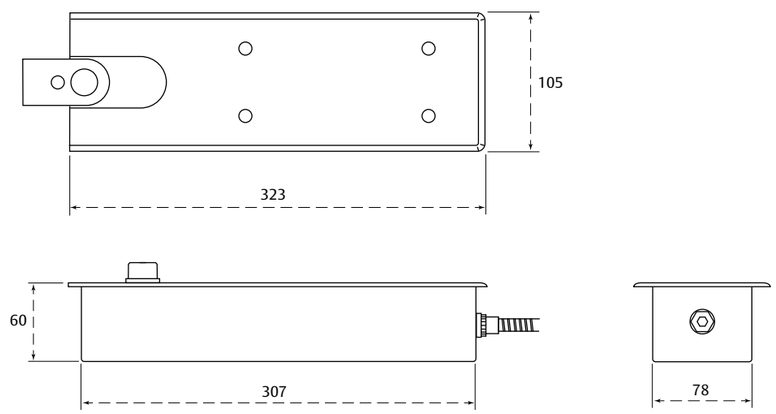

How to order

Order code	Description	Finish
3470	E-mag hold-open size 4 floor spring	N/A

Select required cover plate and spindles etc from door controls accessory section

Door controls accessories

Types of accessories you will find included:

- Covers
- Arm sets
- Guide rails
- Brackets
- Mounting plates
- Floor spring fitting sets
- Transom fitting sets

ASSA ABLOY
Opening Solutions

Rack and pinion accessories

Products: DC135, DC140, DC200, DC300, DC340, DC340, DC347

Product code	Description	Compatible with	Finish	Image
DC340/CV/SS-1	Stainless steel full cover	DC340, DC347	SSS	
DC200/CV/SS-1	Stainless steel full cover	DC200	SSS	
DC300/CV/SS-1	Stainless steel full cover	DC300	SSS	
G195	G195 Guide rail • Height adjustable by 2mm for tolerance • Concealed fastening screws • Using in place of link arm can reduce closing force	DC340	SIL	
G195/SS	Stainless steel guide rail • Opening angle up to 130°	DC340	SSS	
L141	L141 Hold-open link arm • Not for fire and smoke protection doors	DC140	SIL	
L190	L190 Link arm • Opening angle up to 180°	DC340, DC300, DC200, DC140	SIL	
L190/SS	Stainless steel L190 link arm	DC340, DC300, DC200, DC140	SSS	
L191	L191 Hold-open link arm • Hold-open angle adjustable up to 150° • Hold-open mode can be enabled and disabled as required • Same installation as link arm • Not for fire and smoke protection doors	DC340, DC300, DC200	SIL	

Product code	Description	Compatible with	Finish	Image
L197	L197 Link arm • Supplied as standard for heavy duty models	DC300, DC340, DC347, DC300T	SIL	
L198	Extended projection armset for deep frame reveals	DC300, DC340	SIL	
A104	A104 Angle bracket • Guide rail mounting angle for underslung push side applications	DC340AT5	SIL	
A120	A120 Universal mounting plate	DC300, DC200	SIL	
A122	A122 Angle bracket • For frame mounting in case of deep jamb, headroom reduced by 70mm	DC200	SIL	
A123	A123 Angle bracket • For frame mounting in case of deep jamb, headroom reduced by 70mm	DC300	SIL	
A107	A107 Angle bracket • For frame mounting in case of deep jamb, headroom reduced by 80mm	DC347, DC340	SIL	
A121	A121 Tandem mounting plate kit • Required as standard with the DC300T • Includes extra long connecting spindle	DC300T	SIL	
A126	A126 Mounting plate	DC347, DC340	SIL	
A130	A130 Mounting plate • For guide rail G195	DC340	SIL	

Product code	Description	Compatible with	Finish	Image
A152	A152 Hold-open device • Mechanical hold-open device for doors which sometimes need to be secured in the open position • Simple fitting into guide rail G193 and G195 • Hold-open angle maximum 130° • Continuously adjustable holding force • Not approved for use on fire and smoke protection doors	DC340	SIL	
A153	A153 Opening damper • Helps to prevent the door and door handle from hitting a return wall • Simple fitting into guide rail • Opening damper continuously adjustable up to an opening angle of maximum 130° • Does not replace a door stop	DC340	SIL	
A154	A154 Parallel arm bracket • For parallel arm installation Please always check the suitability of your fire/smoke doors for suitability with these accessories	DC340, DC300, DC200, DC140	SIL	
A154/SS	A154 Parallel arm bracket • For parallel arm installation Please always check the suitability of your fire/smoke doors for suitability with these accessories	DC340, DC300, DC200, DC140	SSS	

Cam-Motion® accessories

Products: DC500, DC700

Product code	Description	Compatible with	Finish	Image
DC500/CV/SS	Stainless steel full cover	DC500, DC700	SSS	
G195	G195 Guide rail • Height-adjustable by 2mm for tolerance • Concealed fastening screws	DC500, DC700	SIL	
G195/SS	G195 Guide rail • Height-adjustable by 2mm for tolerance • Concealed fastening screws	DC500, DC700	SSS	
G193	Non height adjustable guide rail for cam closers	DC500, DC700	SIL	
A104	A104 Angle bracket	DC500, DC700	SIL	
A120	A120 Universal body mounting plate	DC500, DC700	SIL	
A124	A124 Replacement body mounting plate • Where additional or extra fixing points are required	DC500, DC700	SIL	
A130	A130 Rail mounting plate • For guide rail G195	DC500, DC700	SIL	
A152	A152 Mechanical hold-open device • Mechanical hold-open device for doors which sometimes need to be secured in the open position • Simple fitting into guide rail and G195 • Hold-open angle max. 130° • Not approved for fire and smoke protection doors • Continuously adjustable holding force	DC500, DC700	SIL	
A153	A153 Opening damper • Helps to prevent the door and door handle from hitting a return wall • Simple fitting into guide rail • Opening damper continuously adjustable up to an opening angle of max. 130° • Does not replace a door stop	DC500, DC700	SIL	

ASSA ABLOY
Opening Solutions

Solutions accessories

Products: DC700G-CM, DC700G-FT

Product code	Description	Compatible with	Finish	Image
G150	Guide rail G150 • Close-Motion® control curve integrated in the guide rail • Drilling template of the standard guide rails from ASSA ABLOY can be used • Height-adjustable by 2mm for tolerance • Concealed fastening screws	DC700G-CM	SIL	
A230 A240 A250 A260	Rail adapter plate for rebated doors for G150 • A230 / 2mm • A240 / 3mm • A250 / 5mm • A260 / 15mm • Combination with A240, A250, A260 possible	DC700G-CM	SIL	
A158	Mechanical hold-open device for G150 rail • Mechanical hold-open device for temporarily holding doors open • Doors held open at an opening angle of 130° hinge side • Continuously adjustable holding force Not approved for use on fire and smoke protection doors	DC700G-CM	SIL	
A188	Opening damper for G150 rail • Helps to prevent the door and door handle from hitting a return wall • Simple installation in the guide rail • Does not replace a door stop	DC700G-CM and DC700G-FT	SIL	
DCFA01 DCFA02 DCFA03 DCFA04 DCFA05 DCFA06	Range of mounting plates and shims for DC700G-FT in 5mm or 15mm depths – full details available on request	DC700G-FT	SIL	
814636	Electro-mechanical hold open unit (G460) to allow fire compliant hold open	DC700G-FT	SIL	

Concealed Cam-Motion® accessories

Products: DC840, DC860, SC-CE3F

Product code	Description	Compatible with	Finish	Image
A860-IK	Intumescent kit for DC860 body and rail	DC860	N/A	
A840-IK	Intumescent kit for DC840 body and rail	DC840	N/A	
SC-CE3F-30-IK	FD30 Intumescent kit for SC-CE3F body and rail	SC-CE3F	N/A	
SC-CE3F-60-IK	FD60 Intumescent kit for SC-CE3F body and rail	SC-CE3F	N/A	
G893	G893 height adjustable guide rail • Standard size guide rail, can be used with hold-open device and opening damper • For standard applications	DC840, DC860	SIL	
A153	A153 Hold-open device • Mechanical hold-open device for doors which sometimes need to be secured in the open position • Simple fitting to guide rail G893 • Not approved for use on fire and smoke protection doors	DC840, DC860	SIL	
A156	A156 Hold-open device • Mechanical hold-open device for doors which sometimes need to be secured in the open position • Simple fitting to guide rail G892 • Not approved for use on fire and smoke protection doors	DC840, DC860	SIL	
A157	A157 Opening damper • Helps to prevent the door and door handle from hitting a return wall • Simple fitting into guide rail G892 • Does not replace a door stop	DC840, DC860	SIL	
A193	A193 Fire protection • This fire protection is used to improve fire resistance on certain door types	DC840, DC860	BLK	
A100	A100 • Mechanical hold open	SC-CE3F	SIL	
A110	A110 • Guide rail damper	SC-CE3F	SIL	

ASSA ABLOY
Opening Solutions

Electromagnetic accessories

Products: DC300G-HF, DC34OTE with G460, DC700G-FM, DC640, DC700 with G460 (DC500), DC700 with G461 (DC500) and DC700 with G462/64 (DC500), Guardian, 4870/9870

Product code	Description	Compatible with	Finish	Image
G120	G120 Hook arm • For double leaf doors, non-hinge side mounting • Always required when fitting closer to push side	G461, G462 and G464 double fire door systems	SIL	
G694	G694 Free-swing guide rail • Free-swing angle adjustable up to 180° • Closing force size EN 3-4 • Doors up to 1100mm wide	DC640	SIL	
L690	L690 Free-swing link arm • Free-swing angle adjustable up to 180° • Closing force size EN 3-6 • Doors up to 1400mm wide	DC640	SIL	
A102	A102 Carry bar • Enables the correct opening sequence of double leaf doors • Installed on inactive door leaf on non-hinge side • G461/G462/G464 installed on non-hinge side	G461, G462 and G464 double fire door systems	SIL	
A114	A114 Mechanical hold-open device • For doors which need to be secured in the open position • Hold-open angle adjustable from ca. 70°-120° • Not approved for use on fire and smoke protection doors	G461, G462 and G464 double fire door systems	SIL	
A115	A115 Mounting plate • For guide rail G460 face mounting pull side	G460, G461, G462 and G464	SIL	
A116	A116 Angle bracket • For guide rails • Face mounting push side • Non-hinge side mounting	G460, G461, G462 and G464	SIL	
A117	A117 Angle bracket • Middle bracket for guide rails, non-hinge side mounting	G461, G462 and G464 double fire door systems	SIL	
A120	A120 Universal body mounting plate • For mounting with drilling template	DC700G-FM	SIL	

Product code	Description	Compatible with	Finish	Image
A130	A130 Rail mounting plate • For guide rails	DC700G-FM and DC640	SIL	
A153	A153 Opening damper • Helps to prevent the door and door handle from hitting a return wall • Simple fitting into guide rail • Opening damper continuously adjustable up to an opening angle of maximum 130° • Does not replace a door stop	DC700G-FM	SIL	
A178	A178 Flush mounted release button • For manual release of hold-open doors • Not for fire and smoke protection doors	DC700 with G460 (DC500) and DC640	SIL	
A191	A191 Opening damper • Helps to prevent the door and door handle from hitting a return wall • Simple fitting into guide rail and continuously adjustable • Does not replace a door stop	DC700 with G460 (DC500), DC700 with G461 (DC500) and DC700 with G462/64 (DC500)	SIL	
DC300G/HF/ SPARELOOP	600mm extra long door loop & switch	DC300G-HF	GALV	
PSU2	2 amp 24v DC Power Supply (4 outputs)	Guardian, 4870, 9870, DC300G-HF, DC640	WHITE	
PSU4	4 amp 24v DC Power Supply (8 outputs)	Guardian, 4870, 9870, DC300G-HF, DC640	WHITE	
X036	Door loop – 450mm as standard. Extended lengths up to 650mm available on request	4870, 9870	BLK	

Concealed electromagnetic accessories

Products: DC860 with G880 (DC840), DC860 with G881 (DC840) and DC860 with G882/84 (DC840)

Product code	Description	Compatible with	Finish	Image
A102	A102 Carry bar • Enables the correct opening sequence of double doors, installed on inactive door leaf on non-hinge side (G461/G462/G464 installed on non-hinge side)	DC860 with G881 (DC840) and DC860 with G882/84 (DC840)	SIL	
A114	A114 Mechanical hold-open device • For doors which need to be secured in an open position • Hold-open angle adjustable from ca. 70°-120° • Not approved for use on fire and smoke protection doors	DC860 with G881 (DC840)	SIL	
A191	A191 Opening damper • Helps to prevent the door and door handle from hitting a return wall • Simple fitting into guide rail and continuously adjustable • Does not replace a door stop	DC860 with G881 (DC840)	SIL	
A193	A193 Fire protection • This fire protection is used to improve fire resistance on certain door types	DC860 with G880 (DC840), DC860 with G881 (DC840) and DC860 with G882/84 (DC840)	BLK	

Transom closer accessories

Products: DC6113, 1470

Product code	Description	Compatible with	Finish	Image
A- DCSPINDLETR--14+4 (14mm height)	Spindle	DC6113	GALV	
A-DCSPINDLETR--18 (18mm height)				
A-DCSPINDLETR--20+4 (20mm height)				
A-DCSPINDLETR--24+4 (24mm height)				
AR -5110-0160	End load arm	DC6113	GALV	
AR -5100-0100	Side load arm	DC6113	GALV	
AR -5110-0210	Heavy duty pivot	DC6113	GALV	
RS10-EA	Alternative end load arm	1470	ZP	
RS10-SA	Side load arm	1470	ZP	
RS10-HFP	Heavy duty floor pivot	1470	SSS	
RS10-SP	Alternative height spindles – 28, 20 or 32mm	1470	BLK	
PSU2	2 amp 24v DC Power Supply (4 outputs)	1470	WHITE	
PSU2	4 amp 24v DC Power Supply (8 outputs)	1470	WHITE	

Floor spring accessories

Products: DC450, DC475, DC47, 900, 2000, 3470

Product code	Description	Compatible with	Finish	Image
AC340 - 0mm AC341 – 5mm AC342 – 10mm AC343 – 15mm AC344 – 20mm AC345 – 25mm AC346 – 30mm	Italian spindle • Square shape, different heights of 5mm increments available 0-30mm	DC450, DC475, DC477	SIL	
AC8	AC8 Top pivot for double action doors	DC450, DC475, DC477	SIL	
A115	A115 Reversible bottom arm in steel for double action doors • Socket for Italian squared spindle	DC450, DC475, DC477	SIL	
AC269	AC269 Cover plate	DC475	PSS, SSS, PB	
AC375	AC375 Double action top pivot in full steel with self-lubricating bushing	DC450, DC475, DC477	SIL	
AC384	AC384 Right and left top arm in full steel, 36mm offset • Silver or black painted ABS cover	DC450, DC475, DC477	SIL, BLK	
AC392	AC392 Right and left bottom arm in steel for single action doors, 36mm offset • Silver and black painted ABS covers	DC450, DC475, DC477	SIL, BLK	
AC534	AC534 cover plate	DC477	SSS, PSS, PB	
AC583	AC583 Right and left bottom arm in steel for single action doors, 36mm offset • Socket for Italian square spindle	DC450, DC475, DC477	SIL, BLK	
AC619	AC619 Cover plate	DC450	SSS, PS, PB	

Product code	Description	Compatible with	Finish	Image
X070	Single action 16mm fitting set, comprising of: • X050 cover plates • X051 single action fitting strap, 16mm • X053 single action top centre, 16mm	900, 2000, 3470	SS, PS	
X071	Single action 25mm fitting set, comprising of: • X050 cover plates • X052 single action fitting strap, 25mm • X054 single action top centre, 25mm	900, 2000, 3470	SS, PS	
X072	Double action 16mm fitting set, comprising of: • X050 cover plates • X055 double action fitting strap • X056 double action top centre	900, 2000, 3470	SS, PS	
X050	Cover plates	900, 2000, 3470	SS, PS	
X051	Single action fitting strap, 16mm	900, 2000, 3470	SS, PS	
X053	Single action top centre, 16mm	900, 2000, 3470	SS, PS	
X052	Single action fitting strap, 25mm	900, 2000, 3470	SS, PS	
X054	Single action top centre, 25mm	900, 2000, 3470	SS, PS	
X055	Double action fitting strap	900, 2000, 3470	ZP	
X056	Double action top centre	900, 2000, 3470	SS, PS	
X057	Gel infill for improved water resistance	900, 2000, 3470	N/A	

Product code	Description	Compatible with	Finish	Image
X058	Extra height spindles – 5 to 50mm in 5mm increments	900, 2000, 3470	Black	
X073	Flanged suspension box for use with suspended floors	900, 2000, 3470	N/A	
X074	Carpet tray – 10mm deep	900, 2000, 3470	SS	
X075	Carpet tray – 20mm deep	900, 2000, 3470	SS	
X076	Carpet tray – 30mm deep	900, 2000, 3470	SS	
X077	Carpet tray – 40mm deep	900, 2000, 3470	SS	
PSU2	2 amp 24v DC Power Supply (4 outputs)	3470	White	
PSU4	4 amp 24v DC Power Supply (8 outputs)	3470	White	

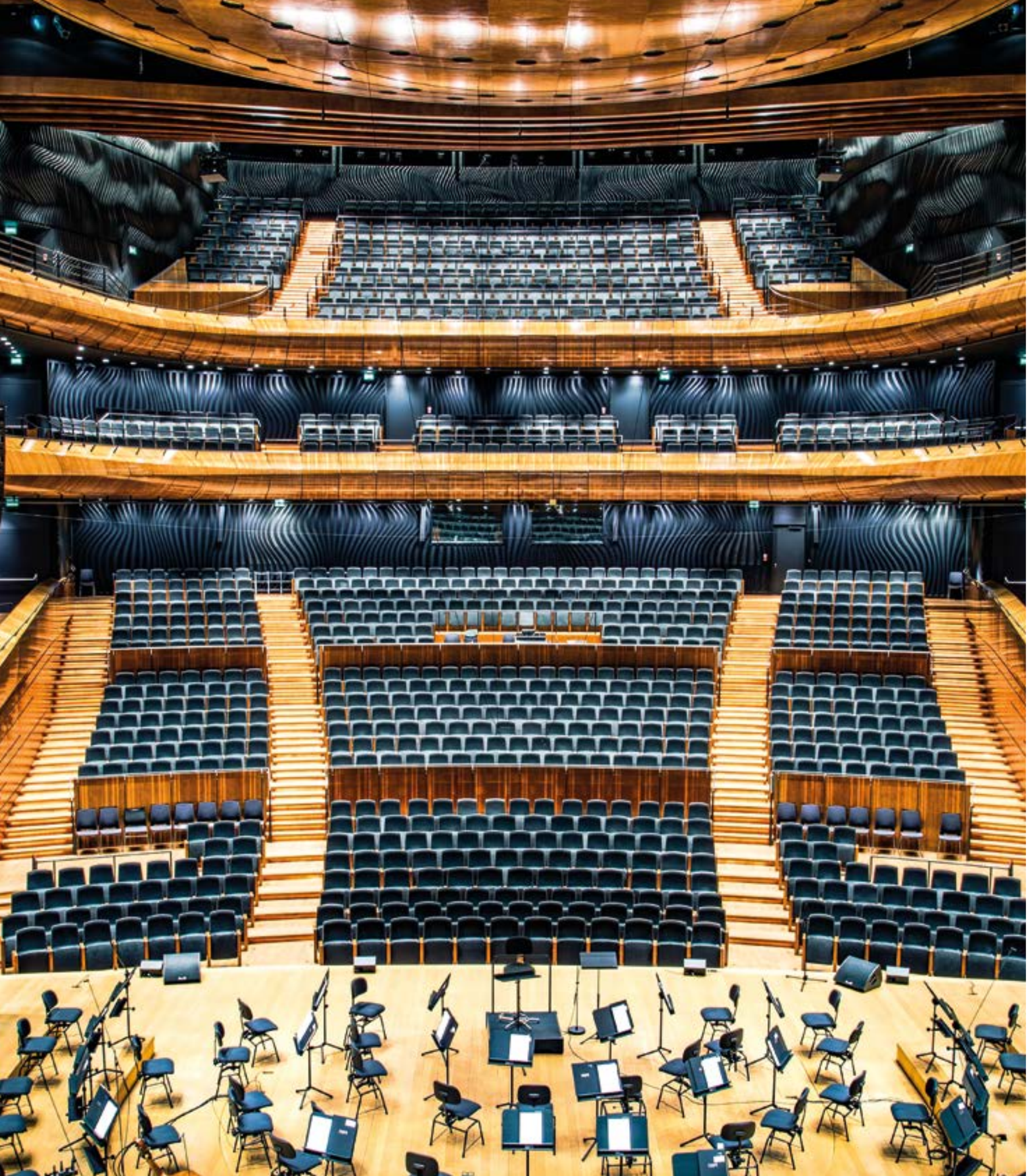

Panic and emergency hardware

Introduction	136
Legislation	144
Product selector	150
General panic and emergency hardware	157
Slimline panic and emergency hardware	183
Touch bar panic hardware	205
Touch bar electronic latch retraction hardware	225
High security panic and emergency hardware	239
Paddle handle emergency hardware for use on aluminium doorsets	269
Touch bar panic hardware for use on aluminium doorsets	277
Accessories	283

Panic and emergency hardware

Panic and emergency hardware covers a range of devices installed on escape doors to enable rapid evacuation of a building. Typically in the UK, panic and emergency devices are fitted to final exit doors but they can also be used on internal doors. These doors are normally securely locked to prevent unauthorised entrance into a building but people within a building must always be able to exit quickly and easily in the event of an emergency. Panic and emergency hardware units are tested to standards that prove the ability to escape is not compromised by the need for external security.

Everyone in the supply chain, from specifier to installer to maintenance team to visitors, has a responsibility in ensuring safe evacuation from a building in the event of an unsafe situation. This includes the correct installation, maintenance and awareness of how to use appropriate escape hardware around the building.

Within our portfolio, we offer a complete collection including classic UK styled push bar or touch bar solutions ideal for timber and steel doors, slimline designs which are excellent for use on UPVC or glazed doors, high security units and mortice products for aluminium doorsets. We are proud that many of our ranges are UK designed and manufactured in our own UK factory to deliver a tailored and proven solution for every exit hardware application.

Key features

- Modular designs to suit public or restricted access areas of a building
- High security for perimeter exit doors; stylish for internal doors
- Hard-wearing and durable, easy to specify and install
- Single and multi-point panic exit devices for use on single or double doorsets
- Slim, compact reversible design with a high quality finish

Parts of panic and emergency hardware

Panic hardware

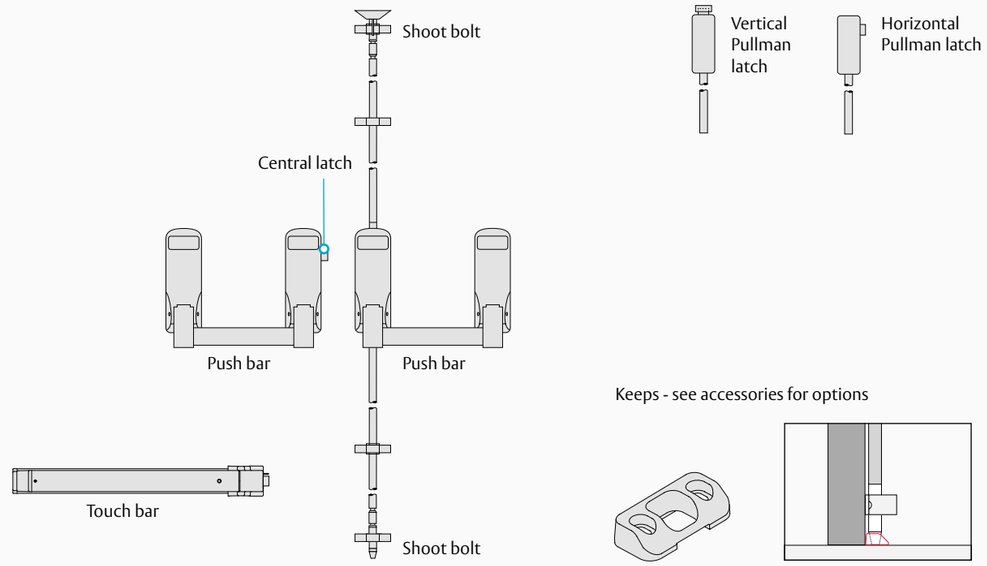

Emergency hardware

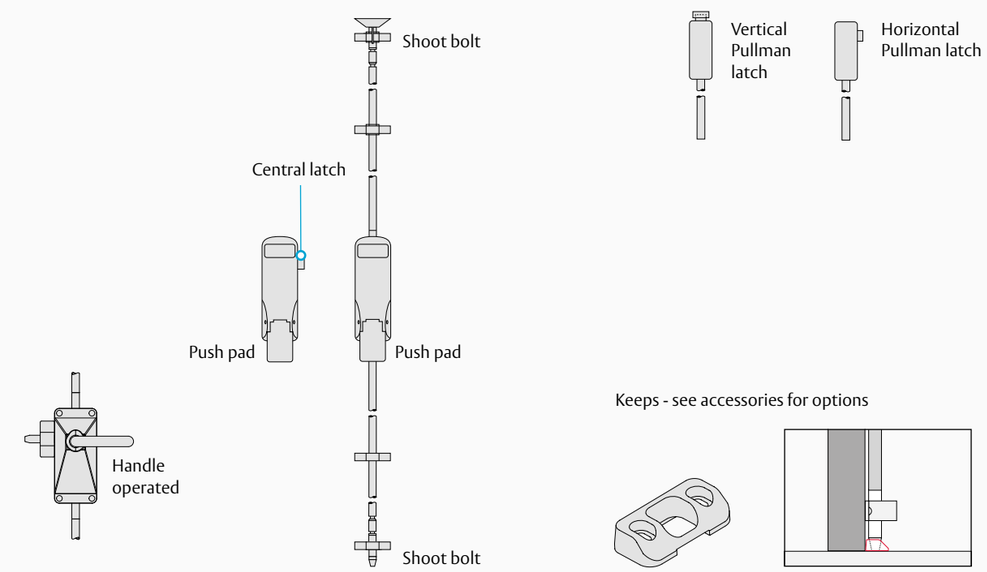

Useful terminology

Terminology	Explanation
Keeps	Plates or components that the latch or bolt engages with to keep the door shut. Different door and frame styles require different keep solutions.
Micro switch or Monitoring	A device integrated into the hardware during manufacture that monitors the latch or bolt position (i.e. 'door open' or 'door closed') and can give a signal back to an alarm system.
Dogging or lock back	Ability to hold back bolts to prevent re-engagement with keeps to make the door a 'push/pull' passage door during the day.
Rebated double door – active leaf	Rebated double door leaves have a stepped and overlapping edge so it's important to know which leaf has outer lip and therefore must open first, this is the active (or primary) leaf and typically has a latch product on it to secure against the inactive leaf.
Rebated double door – inactive leaf	Rebated double door leaves have a stepped and overlapping edge so it's important to know which leaf has inner lip and therefore must open second, this is the inactive (or secondary) leaf and typically has a shoot bolt or Pullman product on it to secure it to the threshold and frame.
Plain meeting stiles double door	Plain meeting stile leaves have a square edge (and a clear gap between them) so each leaf can open independently of the other. They typically have shoot bolt or Pullman products on them to secure each leaf to the threshold and frame.

Considerations for selecting the right exit hardware

Hardware options

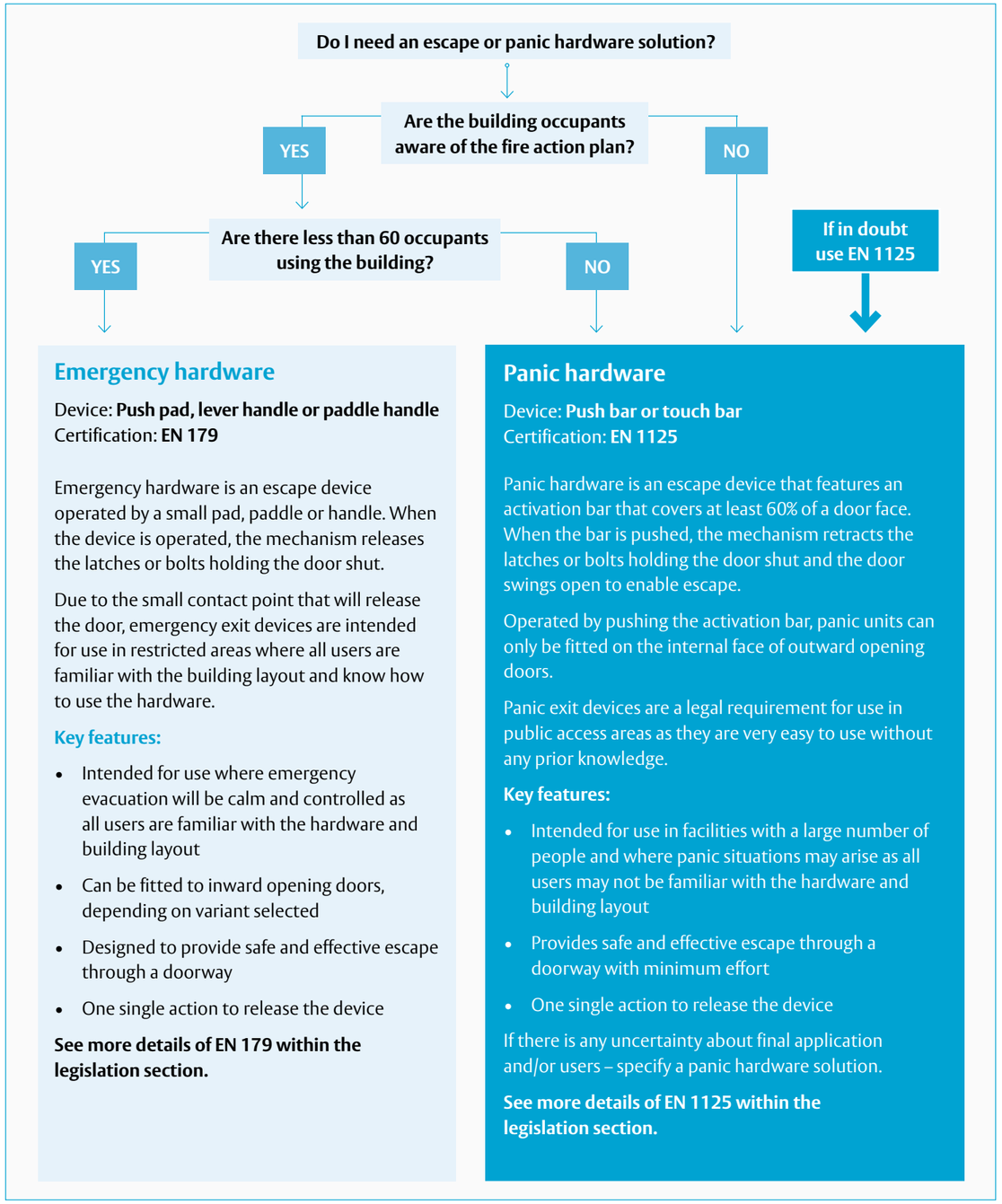

Is entry from outside required?

Outside access devices (OADs) are designed to give lockable entry from the outside of a door secured by panic or emergency exit hardware.

Most often OADs are operated either by a knob or lever. Installing our lever operated devices can help meet the requirements of BS 8300 for barrier free access and offer easier operation. However knobs are generally more difficult to abuse so can be more suited to exposed locations.

It is critical that any outside access device is tested and certified for use with the internal hardware, otherwise it will invalidate the CE compliance.

Locking considerations

Locking types:

- **Shoot bolts** are a fixed peg that locates into a keep, rather like a deadbolt on a sashlock. They are mechanically pulled and held back to allow the door to open and then release to secure the door as it touches the frame when the door is closing. Shoot bolts operate in an up and down motion only.

- **Pullman latches** are sprung loaded pivoting bolts, like a latch in a sashlock. They are pulled back to clear the keep and allow the door to open but immediately spring back when the bar/pad is released. The latch spring action allows them to rock over the keep during the closing cycle without causing damage. Pullmans can also be used in a horizontal application and are ideal for tricky or protected transom detail.

Number of locking points

The number of locking points required depends on the needs of the project, budget and door type. 1 or 2 point locking is generally fine for a single door and 3 or 4 points is ideal for a double doorset. However, particularly windy, pressure sensitive sites or high security areas may require additional locking points on single and double doorsets.

Is it a fire door?

If hardware is being specified for use on a fire door, ensure the unit has appropriate fire door test evidence that covers both the correct door material and time frame.

What are the door details?

Are doors glazed, moulded or flat?

Touch bars are best installed on flat faced doors (or those with a solid mid rail) as they require full contact with the door skin. Push bars, especially slimline units with a narrow footprint, are ideal for fully glazed or moulded doors. If installing a mortice operator solution to a glazed door, allow for full lock case dimension, not just the backset, to prevent clashing with the glazing or bead.

Is the door inward or outward opening?

It is impossible to push a bar towards the door face and still pull the doorset towards you in a single action. Panic escape doors must always open outwards given main traffic flow during evacuation. Outward opening escape doors ensure users keep moving forward. Inward opening doors would require evacuees having to step backwards to open the door, potentially into the path of other evacuees, before moving forward again to exit the building, wasting time and creating an avoidable bottleneck.

For emergency products it is less critical as EN 179 allows the use of lever handles which can be gripped and held down to retract latches at the same time as being pushed or pulled open. Also, as they are restricted to areas where users are familiar with building layout and hardware, the need for a slight backward step to open the door would be expected and allowed for by evacuees.

Where should the unit be fitted?

EN 1125 and EN 179 recommend fitting the operating element at 900-1100mm from finished floor level where possible but do allow for lower installation if required by building users e.g. nursery or primary school with young children.

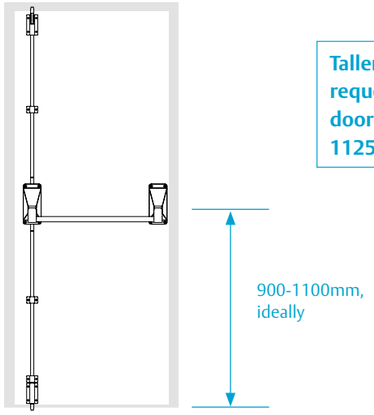

Taller top shoot bolts are available on request however please note overall door dimension limitations of EN 1125 and EN 179 testing.

Security considerations

The primary aim of panic and emergency hardware is to provide escape during an evacuation but that should not make the escape doors a weak point in perimeter security.

Where security is a key requirement consider features such as:

- Extended bolt throw to 30mm
- Solid steel construction
- Anti-thrust technology
- Additional locking points
- Alarm
- Locking box for additional out of hours security

Note: These features are all available within our 700 series, which has been tested to LPS 1175 as well as EN 1125 and EN 179.

Corrosion resistance

Some escape doors are only used very occasionally and it is important to know that when needed the escape hardware will still release, even if it has not been operated for several months. That is why the EN 1125 and EN 179 classifications include corrosion resistance classifications.

If hardware is being fitted in a corrosive environment (coastal/marine, swimming pool etc) select the higher corrosion resistance grade or consider stainless steel construction.

Handing

Most of our panic and emergency escape devices are a universal design, meaning that they can be installed on a left or right hand door, as handing is determined during fitting.

700 series handing

The following diagrams identify if you require a left handed or right handed product, where applicable:

Single doors outward opening

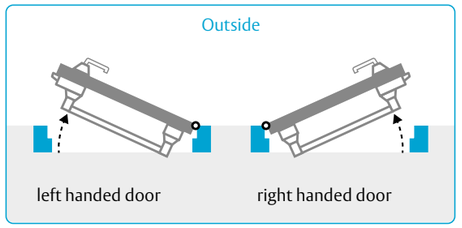

Double doors outward opening

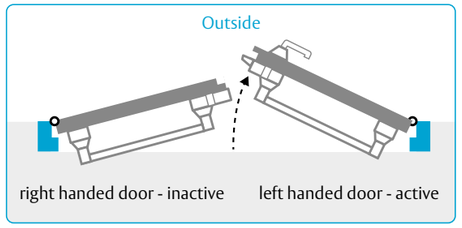

Single doors inward opening

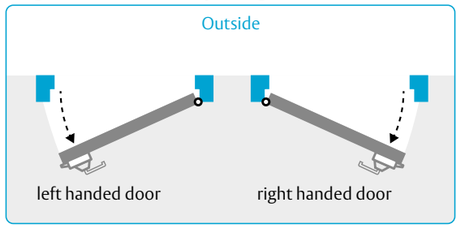

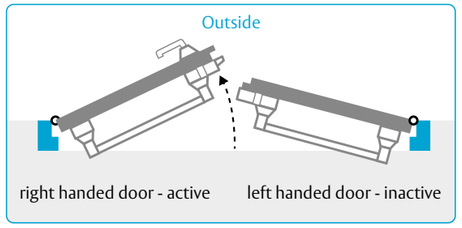

Note: Only the 701B, 701BD and the 705 locking box are handed.

940 series handing

The following diagrams identify if you require a left handed or right handed product, where applicable:

Left hand: Door hinges on left

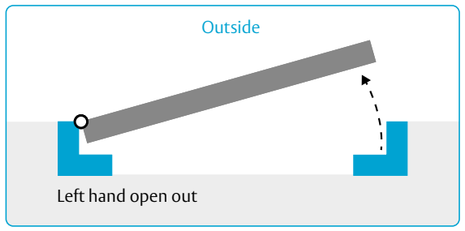

Right hand: Door hinges on right

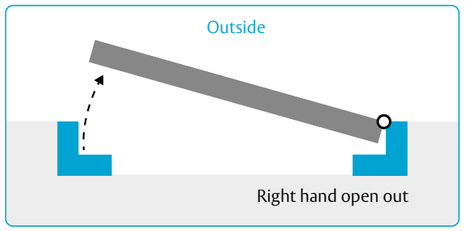

Note: Only the 940 aluminium doorset products are handed.

Legislation

Ensuring the safe exit of people from a building during an evacuation situation is critical. Our product ranges meet the standards and safety driven requirements of EN 1125 and EN 179.

Testing and certification options

Panic and emergency devices (and all related accessories) fitted to final escape doors in EU and UK must be tested to EN 1125 or EN 179 and carry CE mark third party accreditation and/or from 1st Jan 2023 UKCA accreditation to be sold within England, Scotland and Wales.

Beyond this legal requirement, panic and emergency devices can also carry optional accreditation such as Certifire for fire door information and LPS 1175 approval for intruder resistance rating or PAS 24 for enhanced security in doorsets.

EN 1125 – Panic devices

EN 1125 is the European standard that governs panic exit devices. It describes the very thorough testing the system must satisfy to be deemed a panic exit device, including opening with minimal effort even with a 1000N side load applied to the door (equivalent of a giant panda).

It is this ability to release that is one of the essential characteristics for gaining a CE mark to EN 1125, a legal requirement for all final exit escape doors in a public or busy environment. If the door is also a fire door, then hardware must also be subjected to an EN 1634-1 fire test on the same door specification.

EN 1125 itself does not state a maximum occupancy when considering fitting emergency hardware over panic hardware but Building Regulations such as Approved Document B do recommend that escape doors where room occupancy is more than 60 should be fitted with EN 1125 products.

EN 179 – Emergency devices

EN 179 is the European standard that governs emergency exit devices. It describes the testing that the system must satisfy to be deemed suitable for use on final escape doors where users are familiar with the hardware and building layout.

It is the ability to release that is one of the essential characteristics for gaining a CE mark to EN 179, a legal requirement for all doors on escape routes. If the door is also a fire door, then the hardware must also be subjected to a EN 1634-1 fire test on the same door specification.

EN 179 does not address occupancy when considering fitting emergency hardware over panic hardware but Building Regulations such as Approved Document B do indicate that emergency devices are best suited to escape doors where room occupancy is less than 60.

Outside access devices

The hardware fitted on the external door face cannot impact the ability of the escape hardware to release. Therefore any external hardware must be tested with the escape hardware as part of EN 1125 or EN 179 testing even though the outside access device does not fit in any of the 'type of device' classifications (see digit 9 in the classification key).

Outside access devices are normally interchangeable within a specific range of panic and emergency devices, but not extended to different ranges.

Other accessories

EN 1125 and EN 179 both require any associated accessories, such as alarms and different keeps, for a range of panic and emergency hardware to be fitted during testing to ensure that they do not detract from the base units' performance and ultimately a user's ability to escape.

ASSA ABLOY
Opening Solutions

Panic hardware classification key

	EN 1125:2008 Grading scope
CATEGORY OF USE Determines the frequency of use of the product. **Grade 3:** Suitable for high frequency use by users with little incentive to treat hardware carefully	(3)
NUMBER OF TEST CYCLES Tests the durability of the product through various cycle tests. **Grade 6:** 100,000 test cycles **Grade 7:** 200,000 test cycles	(6-7)
TEST DOOR MASS/SIZE Takes into account the mass of the door which the hardware product can reliably be used on. **Grade 5:** Doors up to 100KG **Grade 6:** Doors up to 200KG **Grade 7:** Doors over 200KG	(5-7)
FIRE BEHAVIOUR AND RESISTANCE Suitability of product use on fire/smoke door assemblies having successfully met EN 1634-1 legislation. **Grade 0:** Not suitable for fire/smoke door assemblies **Grade A:** Suitable for smoke door assemblies **Grade B:** Suitable for use on smoke and fire doors	(0/A/B)
SAFETY Categorises the level of safety for the product. **Grade 1:** All panic and emergency exit devices have a critical safety function, therefore only one grade is classified	(1)
CORROSION RESISTANCE Corrosion resistance to EN 1670 Neutral Salt Spray test and operation of the product at extreme temperatures. **Grade 3:** High resistance 96 hours salt spray at -20°C to +80°C **Grade 4:** Very high resistance 240 hours hour salt spray test at -20°C to +80°C	(3-4)
SECURITY Tests the ability to release under side load. The principle concern for panic device performance is safety over security. **Grade 2:** Up to 1000N	(2)
PROJECTION OF DEVICE Classifies how far the opening mechanism projects from the door face. This can be either large or standard projection. **Class 1** - Projection up to 150mm **Class 2** - Projection up to 100mm	(1-2)
TYPE OF DEVICE (see 'Digit 9 – device operation' on diagram overleaf) Identifies the type of operation. EN 1125 and EN 179 have specific operating types which are further categorised by device type. **Type A** - 'push bar' operation **Type B** - 'touch bar' operation	(A/B)
FIELD OF APPLICATION Confirms the door configuration which the unit will satisfy. **Class A** - outward opening single/double doors with active/inactive leaf **Class B** - outward opening single door only **Class C** - outward opening double exit door with inactive leaf only	(A-C)

Emergency hardware classification key

	EN 179:2008 Grading scope
CATEGORY OF USE Determines the frequency of use of the product. **Grade 3:** Suitable for high frequency use by users with little incentive to treat hardware carefully	(3)
NUMBER OF TEST CYCLES Tests the durability of the product through various cycle tests. **Grade 6:** 100,000 test cycles **Grade 7:** 200,000 test cycles	(6-7)
TEST DOOR MASS/SIZE Takes into account the mass of the door which the hardware product can reliably be used on. **Grade 5:** Doors up to 100KG **Grade 6:** Doors up to 200KG **Grade 7:** Doors over 200KG	(5-7)
FIRE BEHAVIOUR AND RESISTANCE Suitability of product use on fire/smoke door assemblies having successfully met EN 1634-1 legislation. **Grade 0:** Not suitable for fire/smoke door assemblies **Grade A:** Suitable for smoke door assemblies **Grade B:** Suitable for use on smoke and fire doors	(0/A/B)
SAFETY Categorises the level of safety for the product. **Grade 1:** All panic and emergency exit devices have a critical safety function, therefore only one grade is classified	(1)
CORROSION RESISTANCE Corrosion resistance to EN 1670 Neutral Salt Spray test and operation of the product at extreme temperatures. **Grade 3:** High resistance 96 hours salt spray at -20°C to +80°C **Grade 4:** Very high resistance 240 hours hour salt spray test at -20°C to +80°C	(3-4)
SECURITY Tests the ability to release under side load. The principle concern for panic device performance is safety over security. **Grade 2:** Up to 1000N **Grade 3:** Up to 2000N **Grade 4:** Up to 3000N **Grade 5:** Up to 5000N	(2-5)
PROJECTION OF DEVICE Classifies how far the opening mechanism projects from the door face. This can be either large or standard projection. **Class 1** - Projection up to 150mm **Class 2** - Projection up to 100mm	(1-2)
TYPE OF DEVICE (see 'Digit 9 – device operation' on diagram overleaf) Identifies the type of operation. EN 1125 and EN 179 have specific operating types which are further categorised by device type. **Type A** - 'lever handle' operation **Type B** - 'push pad' operation	(A/B)
FIELD OF APPLICATION Confirms the door configuration which the unit will satisfy. **Class A** - outward opening single/double doors with active/inactive leaf **Class B** - outward opening single door only **Class C** - outward opening double exit door with inactive leaf only **Class D** - Inward opening single door only	(A-D)

Digit 9 – device operation

EN 1125 (digit 9)

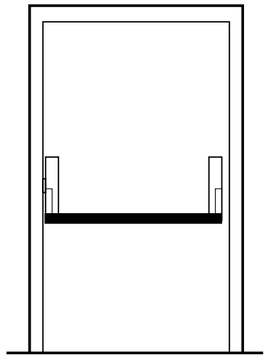

Type A: Push bar

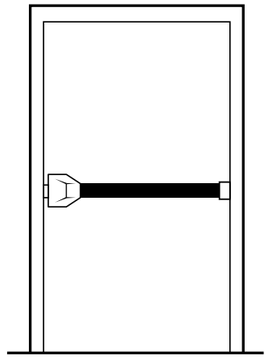

Type B: Touch bar

EN 179 (digit 9)

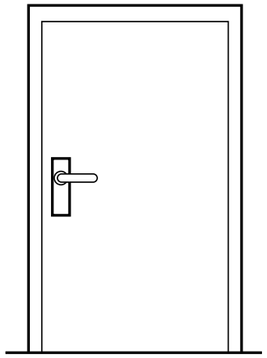

Type A: Lever handle

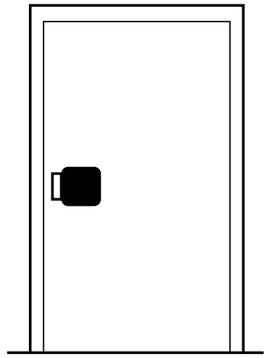

Type B: Push pad or paddle handle

LPS 1175

Loss Prevention Standard (LPS) 1175 is an optional accreditation program operated by a third party and grades products such as doorsets based on how resistant they are to physical attack. Different toolkits and attack durations categorise the Security Rating (SR) the product is certified to; the higher the security rating, the more resistant the product. Exit hardware is installed on a doorset and the overall doorset would be tested as a complete system.

BS 8300-2:2018 – design of an accessible and inclusive built environment

Here are the main recommendations from BS 8300 for consideration on final exit escape doors:

- Panic exit devices operated by a horizontal bar for use on escape routes should conform to EN 1125
- Emergency exit devices should conform to EN 179
- It should be possible to operate all door opening furniture one-handed, without the need to grasp or twist, hence the rise of lever handle operated outside access devices

More details on BS 8300 can be found in the main introduction.

Further legislation and certification information can be found in the Standards and legislation section.

ASSA ABLOY
Opening Solutions

Product selector

● as standard
■ with additional hardware

		General												Slimline															
		296	305	294	285	284	297	306	293	302	322	325	326	501-B	502A-B	512-B	522-B	503A-B	513-B	523-B	501-P	502A-P	512-P	522-P	503A-P	513-P	523-P	525	526
Device type	Panic hardware	●	●	●	●	●								●	●	●	●	●	●	●									
	Emergency hardware						●	●	●												●	●	●	●	●	●	●		
	Outside access device									●	●	●	●															●	●
	Accessory																												
Activation type	Touch bar																												
	Push bar	●	●	●	●	●								●	●	●	●	●	●	●									
	Push pad						●	●	●												●	●	●	●	●	●	●		
	Lever handle										●	●																●	
	Paddle handle																												
	Knob									●			●																●
Mounting	Surface mounted	●		●	●	●	●		●	●	●	●	●	●	●	●	●	●	●	●	●	●	●	●	●	●	●	●	●
	Morticed hardware		●					●																					
Door type	Single door	●	●	●			●	●	●	●	●	●	●	●	●	●	●	●	●	●	●	●	●	●	●	●	●	●	●
	Double doorset	■	■	■	●	●	■	■	■	●	●	●	●	■	■	■	■	■	■	■	■	■	■	■	■	■	■	●	●
Door opening	Outward	●	●	●	●	●	●	●	●	●	●	●	●	●	●	●	●	●	●	●	●	●	●	●	●	●	●	●	●
	Inward																												
Dimensions (single leaf)	Max door width (mm)	1220	1220	1220	1220	1220	1220	1220	1220	1220	1220	1220	1220	1220	1220	1220	1220	1220	1220	1220	1220	1220	1220	1220	1220	1220	1220	1220	1220
	Projection from door face (mm)	98	98	98	98	98	83	83	83	70	88	95	76	92	92	92	92	92	92	92	92	92	92	92	92	92	92	95	76
Locking points	Shoot bolt			●	●	●			●						●			●				●			●				
	Central latch/lock	●			●		●							●				●	●	●	●				●	●	●		
	Pullman latches (H= horizontal; V = vertical)															V	H		V	H			V	H		V	H		
	No. of locking points	1	1	2	3	4	1	1	2					1	2	2	2	3	3	3	1	2	2	2	3	3	3		
Certification	UKCA / CE marked	●	●	●	●	●	●	●	●					●	●	●	●	●	●	●	●	●	●	●	●	●	●		
	EN 1125	●	●	●	●	●								●	●	●	●	●	●	●									
	EN 179						●	●	●												●	●	●	●	●	●	●		
	Full tested accessory									●	●	●	●															●	●
	LPS 1175																												
	Certifire	●		●	●	●	●		●					●	●	●	●	●	●	●	●	●	●	●	●	●	●		
Fire rating	Timber FD30	●		●	●	●	●		●	●	●			●	●	●	●	●	●	●	●	●	●	●	●	●	●		
	Timber FD60	●		●	●	●	●		●	●	●			●	●	●	●	●	●	●	●	●	●	●	●	●	●		
	Timber FD90	●		●	●	●	●		●					●	●	●	●	●	●	●	●	●	●	●	●	●	●		
	Timber FD120	●		●	●	●	●		●					●	●	●	●	●	●	●	●	●	●	●	●	●	●		
	Metal FD120	●		●	●	●	●		●	●	●			●	●	●	●	●	●	●	●	●	●	●	●	●	●		
	Metal FD240	●		●	●	●	●		●	●	●			●	●	●	●	●	●	●	●	●	●	●	●	●	●		

ASSA ABLOY
Opening Solutions

Product selector

● as standard
■ with additional hardware

		Touch bar															Touch bar electronic latch retraction									
		400	401	402	403	416	417	404	405	418	419	420	421	425	426		TB450	TB451	TB452	TB453	TB466	TB467	TB454	TB455	TB468	TB469
Device type	Panic hardware	●	●	●	●	●	●	●	●	●	●	●	●				●	●	●	●	●	●	●	●	●	●
	Emergency hardware																									
	Outside access device													●	●											
	Accessory																									
Activation type	Touch bar	●	●	●	●	●	●	●	●	●	●	●	●				●	●	●	●	●	●	●	●	●	●
	Push bar																									
	Push pad																									
	Lever handle													●												
	Paddle handle																									
	Knob														●											
Mounting	Surface mounted	●	●	●	●	●	●	●	●	●	●			●	●		●	●	●	●	●	●	●	●	●	●
	Morticed hardware											●	●													
Door type	Single door	●	●	●	●	●	●	●	●	●	●	●	●	●	●		●	●	●	●	●	●	●	●	●	●
	Double doorset	■	■	■	■	■	■			■	■			●	●		■	■	■	■	■	■			■	■
Door opening	Outward	●	●	●	●	●	●	●	●	●	●	●	●	●	●		●	●	●	●	●	●	●	●	●	●
	Inward																									
Dimensions (single leaf)	Max door width (mm)	900	1200	900	1200	900	1200	900	1200	900	1200	900	1200	1220	1220		900	1200	900	1200	900	1200	900	1200	900	1200
	Projection from door face (mm)	62	62	62	62	62	62	62	62	62	62	62	62	95	76		62	62	62	62	62	62	62	62	62	62
Locking points	Shoot bolt																									
	Central latch/lock	●	●					●	●	●	●						●	●					●	●	●	●
	Pullman latches (H= horizontal; V = vertical)			V	V	H	H	V	V	H	H								V	V	H	H	V	V	H	H
	No. of locking points	1	1	2	2	2	2	3	3	3	3	1	1				1	1	2	2	2	2	3	3	3	3
Certification	UKCA / CE marked	●	●	●	●	●	●	●	●	●	●	●	●				●	●	●	●	●	●	●	●	●	●
	EN 1125	●	●	●	●	●	●	●	●	●	●	●	●				●	●	●	●	●	●	●	●	●	●
	EN 179																									
	Full tested accessory													●	●											
	LPS 1175																									
	Certifire	●	●	●	●	●	●	●	●	●	●															
Fire rating	Timber FD30	●	●	●	●	●	●	●	●	●	●															
	Timber FD60	●	●	●	●	●	●	●	●	●	●															
	Timber FD90	●	●	●	●	●	●	●	●	●	●															
	Timber FD120	●	●	●	●	●	●	●	●	●	●															
	Metal FD120	●	●	●	●	●	●	●	●	●	●															
	Metal FD240	●	●	●	●	●	●	●	●	●	●															

ASSA ABLOY
Opening Solutions

Product selector

● as standard
■ with additional hardware

		High security									High security								Paddle handle (aluminium doors)			Concealed touch bar (aluminium doors)	
		701B/30	702B/30	703B/30	704B/30	701-BD/30	742-BD/30	743-BD/30	702L/30		732L/30	703L/30	733L/30	704L/30	705	709	710	715	4591	4596	4781	940	960
Device type	Panic hardware	●	●	●	●	●	●	●														●	●
	Emergency hardware								●		●	●	●	●					●	●	●		
	Outside access device															●	●	●					
	Accessory														●								
Activation type	Touch bar																					●	●
	Push bar	●	●	●	●	●	●	●															
	Push pad																						
	Lever handle								●		●	●	●	●			●	●					
	Paddle handle																		●	●	●		
	Knob															●							
Mounting	Surface mounted	●	●	●	●	●	●	●	●		●	●	●	●	●	●	●	●					
	Morticed hardware																		●	●	●	●	●
Door type	Single door	●	●	●	●				●		●	●	●	●	■	●	●	●	●	●	●	●	●
	Double doorset	■	■			●	●	●	■		■			■	■	●	●	●	■	■	■	■	■
Door opening	Outward	●	●	●	●	●	●	●	●			●		●	■	●	●	●	●	●	●	●	●
	Inward										●		●		■	●	●	●	●	●	●		
Dimensions (single leaf)	Max door width (mm)	1220	1220	1220	1220	1220	1220	1220	1220		1220	1220	1220	1220	1220	1220	1220	1220	1200	1200	1200	1200	1200
	Projection from door face (mm)	133	133	133	133	133	133	133	123		123	123	123	123	49	78	89	95	75	75	75	76	76
Locking points	Shoot bolt		●	●	●	●	●	●	●		●	●	●	●							●		●
	Central latch/lock	●		●	●	●		●				●	●						●	●		●	
	Pullman latches (H= horizontal; V = vertical)																						
	No. of locking points	1	2	3	4	3	4	5	2		2	3	3	4					1	1	2	1	2
Certification	UKCA / CE marked	●	●	●	●	●	●	●	●		●	●	●	●					●	●	●	●	●
	EN 1125	●	●	●	●	●	●	●														●	●
	EN 179								●		●	●	●	●					●	●	●		
	Full tested accessory														●	●	●	●					
	LPS 1175			●	●			●				●	●	●	●		●	●					
	Certifire	●	●	●	●	●			●		●	●	●	●		●	●						
Fire rating	Timber FD30	●	●	●	●	●	●	●	●		●	●	●	●		●	●						
	Timber FD60	●	●	●	●	●	●	●	●		●	●	●	●		●	●						
	Timber FD90																						
	Timber FD120																						
	Metal FD120	●	●	●	●	●	●	●	●		●	●	●	●		●	●						
	Metal FD240	●	●	●	●	●	●	●	●		●	●	●	●		●	●						

General panic and emergency hardware

A versatile range of panic and emergency exit hardware, our market leading push bars and push pads offer an excellent general purpose solution for final exit escape doors.

Including EN 1125 panic escape products and EN 179 emergency escape products our 200 series and 300 series can provide a suited solution that works across public access and restricted areas of a building. This is ideal for environments where seperate zones of a building have different needs and budgets.

The surface mounted push bars and vertical rods can be cut to size on site to give a perfect fit on each doorset. Predominantly sitting proud on the door face, this range is ideal for use on timber, steel or glazed doors.

British designed and manufactured to the highest standards, this range offers a choice of shoot bolt, single point latch or morticed nightlatch locking options.

Range benefits

- British manufactured
- UKCA / CE marked for safety and legal compliance
- 1, 2, 3 or 4 point locking options
- Shoot bolt or latch variants, with Pullman latch options also available on request
- Single and double doorsets
- Surface mounted or with British 57mm centres mortice lock
- Can be tailored to fit each door leaf
- Suitable for use on timber, metal or glazed doors
- Non-handed
- Available in a range of plated and powder coat finishes

ASSA ABLOY
Opening Solutions

296 panic latch

Exidor single point locking panic latch.

Features and benefits

- Minimal hardware on door face for a clean appearance
- Push bar design easily cut to size to suit different door widths
- Supplied with timber or steel door keeps and fixings
- Can be fitted with lever or knob outside access device
- Microswitch option available
- Keeps available for alternative frame arrangements and aluminium doors
- Suited to most general purpose applications and easy to adjust to suit door

Classification code

3	7	6	B	1	3	2	2	A	A
(3)	(6-7)	(5-7)	(0/A/B)	(1)	(3-4)	(2)	(1-2)	(A/B)	(A-C)

EN 1125 :2008

Testing and certification

UKCA / CE marked	Yes
Certified in compliance with	EN 1125
Suitable for fire doors	Timber FD30/FD60/FD90/FD120, metal FD120/FD240
Certifire approval	Yes
Guarantee	10 years

Specification

Unit type	Panic unit
Activation	Push bar
Door type	Single doorset. Rebated double doorset – active leaf
Door opening	Outward
Projection	98mm from door face
Mounting method	Surface mounted bar
No. of locking points	1
Bolt style	Latch
Durability	200,000 cycles
Max door width	1220mm, bar can be cut to size on site
Max door height	2440mm
Max door mass	Up to 200kg
Operation	Pushing the bar down into door face retracts the latch. Releasing the bar returns the latch to the rest position
Handing	Universal – reversible latch
Finish	SIL or SSE (other finishes on request)
Accessories	See panic hardware accessory section for range of alternative keeps

Dimensions

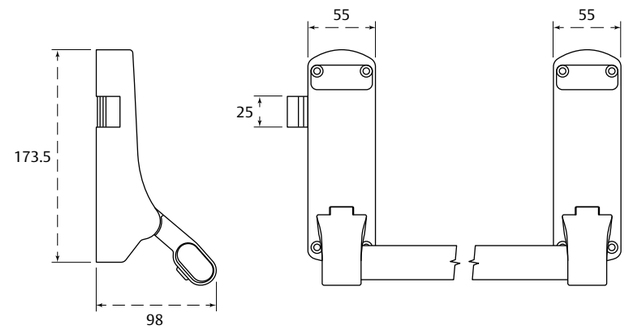

How to order

Order code	Description	Door type	Finish
296	Panic latch	Timber	SIL or SSE (plated)
296SD	Panic latch	Steel	SIL or SSE (plated)

Additional options:

- Indicate required finish when ordering
- Suffix order code with "MS" for microswitch

ASSA ABLOY
Opening Solutions

305 mortice panic latch

Exidor panic mortice actuator with cylinder mortice nightlatch.

Features and benefits

- Morticed into door leaf, offering a hidden latch when closed
- Supplied complete with Euro cylinder nightlatch (cylinder not included)
- Supplied with timber or steel door keeps and fixings
- Mortice lock offers protection against abuse from inside of the door
- Microswitch option available
- Can be specified with a Euro cylinder
- Ideal for low traffic doors in public areas requiring key entry only

Classification code

3	7	6	0	1	3	2	2	A	A
(3)	(6-7)	(5-7)	(0/A/B)	(1)	(3-4)	(2)	(1-2)	(A/B)	(A-C)

EN 1125 :2008

Testing and certification

UKCA / CE marked	Yes
Certified in compliance with	EN 1125
Suitable for fire doors	No
Certifire approval	No
Guarantee	10 years

Specification

Unit type	Panic unit
Activation	Push bar
Door type	Single doorset. Rebated double doorset, active leaf
Door opening	Outward
Projection	98mm from door face
Mounting method	Surface mounted bar
No. of locking points	1
Bolt style	Mortice nightlatch (euro profile cylinder driven)
Durability	200,000 cycles
Max door width	1220mm, bar can be cut to size on site
Max door height	2440mm
Max door mass	Up to 200kg
Operation	Pushing the bar down into door face retracts the latch. Releasing the bar returns the latch to the rest position
Handing	Universal – reversible latch
Finish	SIL or SSE (other finishes on request)
Accessories	See panic hardware accessory section for rebate kits

Dimensions

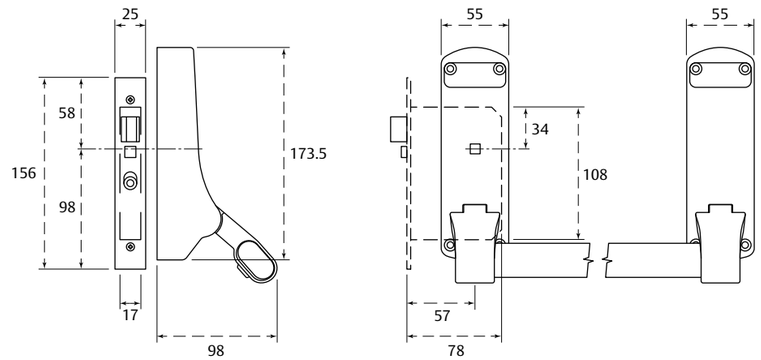

How to order

Order code	Description	Door type	Finish
305	Panic mortice latch	Timber	SIL or SSE (plated)
305/SD	Panic mortice latch	Steel	SIL or SSE (plated)

Additional options:

- Indicate required finish when ordering
- Suffix order code with "MS" for microswitch

294 and 294A panic bolt

Exidor panic bolt with two point vertical locking shoot bolts.

Features and benefits

- Easy to install solution with top and bottom locking points
- Supplied with timber or steel door keeps and fixings
- 294A supplied with adjustable shoot bolts for greater onsite flexibility
- Range of outside access devices
- Microswitch option available
- Keeps available for alternative frame arrangements and aluminium doors
- Economic and versatile solution for many public area buildings

Classification code

3 (3) | 7 (6-7) | 6 (5-7) | B (0/A/B) | 1 (1) | 3 (3-4) | 2 (2) | 2 (1-2) | A (A/B) | A (A-C)

EN 1125 :2008

Testing and certification

UKCA / CE marked	Yes
Certified in compliance with	EN 1125
Suitable for fire doors	Timber FD30/FD60/FD90/FD120, metal FD120/FD240
Certifire approval	Yes
Guarantee	10 years

Specification

Unit type	Panic unit
Activation	Push bar
Door type	Single doorset. Rebated double doorset - inactive leaf. Plain meeting stile double doorset - either leaf
Door opening	Outward
Projection	98mm from door face
Mounting method	Surface mounted bar
No. of locking points	2
Bolt style	Shoot bolts (adjustable on 294A)
Durability	200,000 cycles
Max door width	1220mm, bar can be cut to size on site
Max door height	2440mm
Max door mass	Up to 200kg
Operation	Pushing the bar down into door face retracts the bolts. The bolts remain retracted until automatically released on closing of the door
Handing	Universal
Finish	SIL or SSE (other finishes on request)
Accessories	See panic hardware accessory section for items such as alarm, hold back dogging device and range of alternative keeps

Dimensions

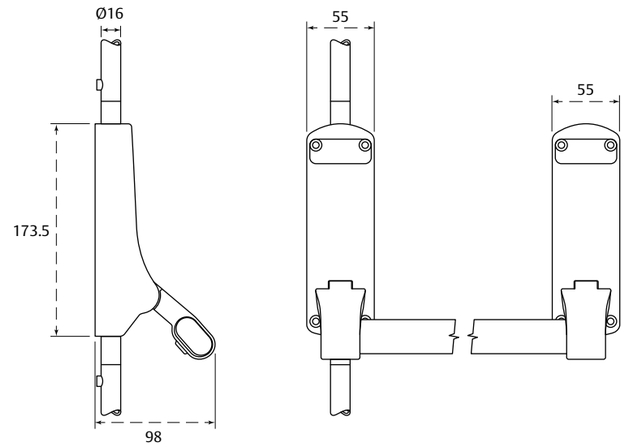

How to order

Order code	Description	Door type	Finish
294	Panic bolt	Timber	SIL or SSE (plated)
294SD	Panic bolt	Steel	SIL or SSE (plated)
294A	Panic adjustable bolts	Timber	SIL or SSE (plated)
294A/SD	Panic adjustable bolts	Steel	SIL or SSE (plated)

Additional options:

- Indicate required finish when ordering
- Suffix order code with "MS" for microswitch

ASSA ABLOY
Opening Solutions

285 and 285A rebated double doorset

Exidor double doorset for rebated double doors featuring a single point panic latch and two point panic bolt.

Features and benefits

- 296 latch unit for use on active leaf and a 294 bolt unit which secures inactive leaf
- Push bar design easily cut to size to suit different door widths
- Supplied with timber or steel door keeps and fixings
- 285A supplied with adjustable shoot bolts for greater onsite flexibility
- Microswitch option available
- Keeps available for alternative frame arrangements and aluminium doors
- Ideal for most public space double doors such as shopping centres, schools and cinemas

Classification code

3	7	6	B	1	3	2	2	A	A
(3)	(6-7)	(5-7)	(0/A/B)	(1)	(3-4)	(2)	(1-2)	(A/B)	(A-C)

EN 1125 :2008

Testing and certification

UKCA / CE marked	Yes
Certified in compliance with	EN 1125
Suitable for fire doors	Timber FD30/FD60/FD90/FD120, metal FD120/FD240
Certifire approval	Yes
Guarantee	10 years

Specification

Unit type	Panic unit
Activation	Push bar
Door type	Rebated double doorset – latch on active leaf and bolt on inactive leaf
Door opening	Outward
Projection	98mm from door face
Mounting method	Surface mounted bar
No. of locking points	3
Bolt style	Active leaf: Single latch Inactive leaf: Shoot bolts (adjustable on 285A)
Durability	200,000 cycles
Max door width	1220mm, bar can be cut to size on site
Max door height	2440mm
Max door mass	Up to 200kg
Operation	Pushing the bar down into door face retracts the latch or bolts The bolts remain retracted until automatically released on closing of the door
Handing	Non-handed
Finish	SIL or SSE (other finishes on request)
Accessories	See panic hardware accessory section for items such as hold back dogging device and range of alternative keeps

Dimensions

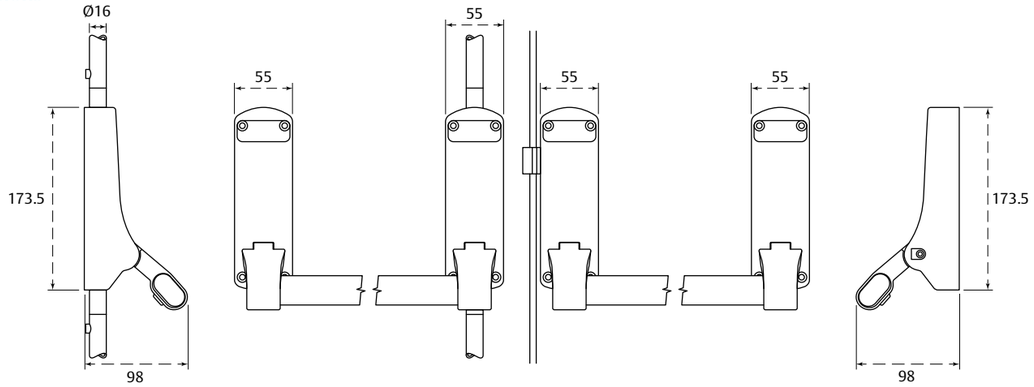

How to order

Order code	Description	Door type	Finish
285	Rebated double door set	Timber	SIL or SSE (plated)
285SD	Rebated double door set	Steel	SIL or SSE (plated)
285A	Rebated double door set with adjustable bolts	Timber	SIL or SSE (plated)
285A/SD	Rebated double door set with adjustable bolts	Steel	SIL or SSE (plated)

Additional options:

- Indicate required finish when ordering
- Suffix order code with "MS" for microswitch

ASSA ABLOY
Opening Solutions

284 and 284A non-rebated double doorset

Exidor panic set comprising of two single panic bolt units for use on plain meeting stile double doorsets.

Features and benefits

- Combines two 294 units into a single set suitable for non-rebated double doors
- Push bar design easily cut to size to suit different door widths
- Supplied with timber or steel door keeps and fixings
- 284A supplied with adjustable shoot bolts for greater onsite flexibility
- Microswitch option available
- Keeps available for alternative frame arrangements and aluminium doors
- Suited to most general purpose non-rebated double door applications, often found in industrial applications

Classification code

3	7	6	B	1	3	2	2	A	A
(3)	(6-7)	(5-7)	(0/A/B)	(1)	(3-4)	(2)	(1-2)	(A/B)	(A-C)

EN 1125 :2008

Testing and certification

UKCA / CE marked	Yes
Certified in compliance with	EN 1125
Suitable for fire doors	Timber FD30/FD60/FD90/FD120, metal FD120/FD240
Certifire approval	Yes
Guarantee	10 years

Specification

Unit type	Panic unit
Activation	Push bar
Door type	Plain meeting stile double doorset
Door opening	Outward
Projection	98mm from door face
Mounting method	Surface mounted bar
No. of locking points	4
Bolt style	Shoot bolts (adjustable on 284A)
Durability	200,000 cycles
Max door width	1220mm, bar can be cut to size on site
Max door height	2440mm
Max door mass	Up to 200kg
Operation	Pushing the bar down into door face retracts the bolts The bolts remain retracted until automatically released on closing of the door
Handing	Universal
Finish	SIL or SSE (other finishes on request)
Accessories	See panic hardware accessory section for items such as alarm, hold back dogging device and range of alternative keeps

Dimensions

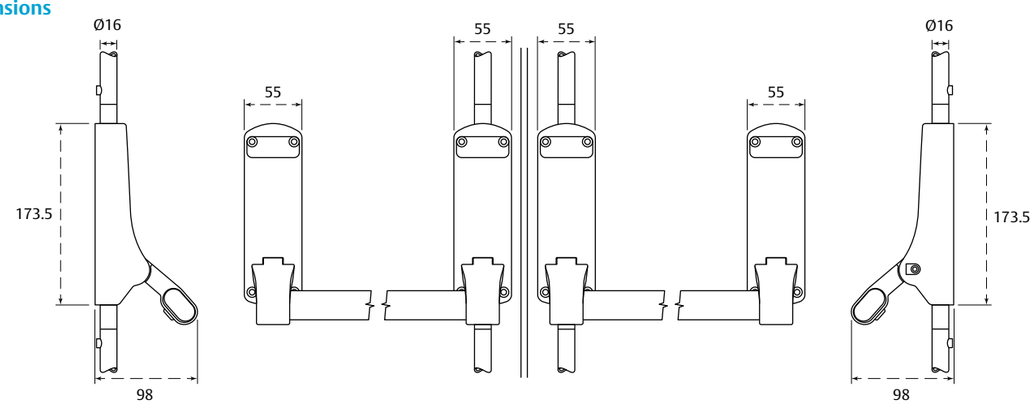

How to order

Order code	Description	Door type	Finish
284	Non-rebated double door set	Timber	SIL or SSE (plated)
284SD	Non-rebated double door set	Steel	SIL or SSE (plated)
284A	Non-rebated double door set with adjustable bolts	Timber	SIL or SSE (plated)
284A/SD	Non-rebated double door set with adjustable bolts	Steel	SIL or SSE (plated)

Additional options:

- Indicate required finish when ordering
- Suffix order code with "MS" for microswitch

ASSA ABLOY
Opening Solutions

297 push pad latch

Exidor emergency push pad latch.

Features and benefits

- Single point surface mounted push pad latch unit
- Push pad design that is simple to install
- Includes an adaptor to connect to a rim cylinder (cylinder not included)
- Supplied with timber or steel door keeps and fixings
- Keeps available for alternative frame arrangements and aluminium doors
- General purpose emergency product where all users are familiar with operation, such as small offices or industrial units

Classification code

3	7	6	B	1	3	4	2	B	A
(3)	(6-7)	(5-7)	(0/A/B)	(1)	(3-4)	(2-5)	(1-2)	(A/B)	(A-D)

EN 179 :2008

Testing and certification

UKCA / CE marked	Yes
Certified in compliance with	EN 179
Suitable for fire doors	Timber FD30/FD60/FD90/FD120, metal FD120/FD240
Certifire approval	Yes
Guarantee	10 years

Specification

Unit type	Emergency unit
Activation	Push pad
Door type	Single doorset. Rebated double doorset - active leaf
Door opening	Outward
Projection	83mm from door face
Mounting method	Surface mounted pad
No. of locking points	1
Bolt style	Latch
Durability	200,000 cycles
Max door width	1220mm
Max door height	2440mm
Max door mass	Up to 200kg
Operation	Pushing the pad down into door face retracts the latch. Releasing the pad returns the latch to the rest position
Handing	Universal – reversible latch
Finish	SIL or SSE (other finishes on request)
Accessories	See panic hardware accessory section for range of alternative keeps

Dimensions

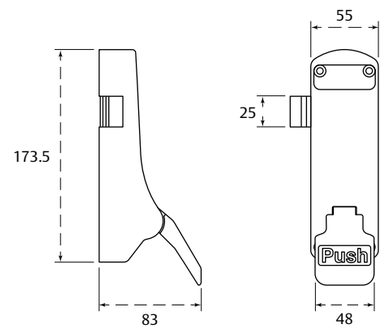

How to order

Order code	Description	Door type	Finish
297	Push pad emergency latch	Timber	SIL or SSE (plated)
297SD	Push pad emergency latch	Steel	SIL or SSE (plated)

• Indicate required finish when ordering

ASSA ABLOY
Opening Solutions

306 push pad mortice actuator with cylinder nightlatch

Exidor emergency push pad with mortice nightlatch.

Features and benefits

- Locking mechanism is morticed into the door leaf, offering a hidden latch when closed
- Supplied complete with Euro cylinder nightlatch (cylinder not included)
- Supplied with timber or steel door keeps and fixings
- Ideal for restricted access areas requiring key entry as mortice lock offers more protection against abuse on internal face

Classification code

3	7	6	0	1	3	4	2	B	A
(3)	(6-7)	(5-7)	(0/A/B)	(1)	(3-4)	(2-5)	(1-2)	(A/B)	(A-D)

EN 179 :2008

Testing and certification

UKCA / CE marked	Yes
Certified in compliance with	EN 179
Suitable for fire doors	No
Certifire approval	No
Guarantee	10 years

Specification

Unit type	Emergency unit
Activation	Push pad
Door type	Single doorset. Rebated double doorset - active leaf
Door opening	Outward
Projection	83mm from door face
Mounting method	Surface mounted pad
No. of locking points	1
Bolt style	Mortice nightlatch (Euro profile cylinder driven)
Durability	200,000 cycles
Max door width	1220mm
Max door height	2440mm
Max door mass	Up to 200kg
Operation	Pushing the pad down into door face retracts the mortice lock latch Releasing the pad returns the mortice lock latch to the rest position
Handing	Universal – reversible latch
Finish	SIL or SSE (other finishes on request)
Accessories	See panic hardware accessory section for rebate kits

Dimensions

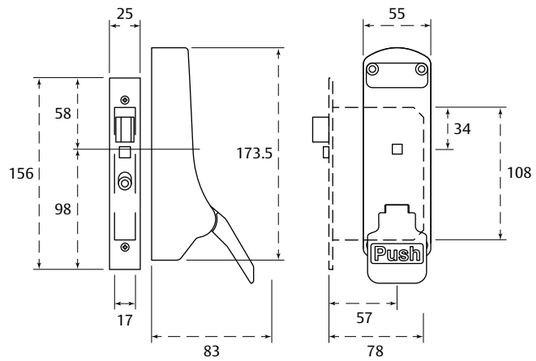

How to order

Order code	Description	Door type	Finish
306	Emergency push pad mortice latch	Timber	SIL or SSE (plated)
306/SD	Emergency push pad mortice latch	Steel	SIL or SSE (plated)

• Indicate required finish when ordering

293 and 293A push pad bolt

Exidor emergency push pad shoot bolt for single doors.

Features and benefits

- Easy to install emergency solution with top and bottom locking points
- 293A comes with adjustable shoot bolts
- Supplied with timber or steel door keeps and fixings
- Keeps available for alternative frame arrangements and aluminium doors
- Two point locking makes this an ideal external door solution in restricted access areas, such as staff only escape routes in restaurants, shops and recreational buildings

Classification code

3 (3) | 7 (6-7) | 6 (5-7) | B (0/A/B) | 1 (1) | 3 (3-4) | 4 (2-5) | 2 (1-2) | B (A/B) | A (A-D)

EN 179 :2008

Testing and certification

UKCA / CE marked	Yes
Certified in compliance with	EN 179
Suitable for fire doors	Timber FD30/FD60/FD90/FD120, metal FD120/FD240
Certifire approval	Yes
Guarantee	10 years

Specification

Unit type	Emergency unit
Activation	Push pad
Door type	Single doorset. Rebated double doorset - inactive leaf. Plain meeting stile double doorset - either leaf
Door opening	Outward
Projection	83mm from door face
Mounting method	Surface mounted pad
No. of locking points	2
Bolt style	Shoot bolts – adjustable on 293A
Durability	200,000 cycles
Max door width	1220mm
Max door height	2440mm
Max door mass	Up to 200kg
Operation	Pushing the pad down into door face retracts the bolts. The bolts remain retracted until automatically released on closing of the door
Handing	Universal
Finish	SIL or SSE (other finishes on request)
Accessories	See panic hardware accessory section for items such as alarm, hold back dogging device and range of alternative keeps

Dimensions

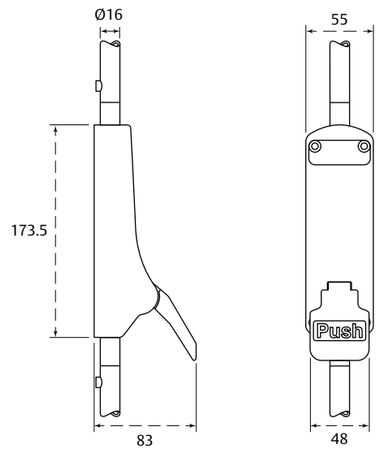

How to order

Order code	Description	Door type	Finish
293	Push pad emergency bolt	Timber	SIL or SSE (plated)
293SD	Push pad emergency bolt	Steel	SIL or SSE (plated)
293A	Push pad emergency adjustable bolt	Timber	SIL or SSE (plated)
293ASD	Push pad emergency adjustable bolt	Steel	SIL or SSE (plated)

• Indicate required finish when ordering

302 knob outside access device

Exidor round knob outside access device for use with 200 series and 300 series hardware.

Features and benefits

- For gaining entry through an escape door
- Compact design of external hardware for use with 200 and 300 series hardware
- Bolt through fixings make it suitable for steel or timber doors up to 50mm thick
- Available with or without Euro cylinder
- Locking the cylinder prevents access into the building but will not prevent escape out of the building
- Key retention option
- Suitable for access points such as staff entries

Testing and certification

UKCA / CE marked	As an approved accessory to the internal hardware
Certified in compliance with	Certified 200/300 series accessory as part of EN 1125 and EN 179
Suitable for fire doors	Timber FD30/FD60, metal FD120/FD240
Certifire approval	Yes – as an accessory to the internal hardware
Guarantee	10 years

Specification

Unit type	Outside access device
Activation	Knob handle
Door type	Single doorset. Rebated double doorset - active leaf. Plain meeting stile double doorset - either leaf
Door opening	Outward
Projection	70mm from door face
Mounting method	Surface mounted
Max door width	1220mm
Max door height	2440mm
Max door mass	Up to 200kg
Operation	Rotating the knob retracts the internal bolts/latches. Releasing the knob returns the internal bolts/latches to the rest position
Handing	Universal
Cylinder specification for master keying needs	40mm single Euro profile cylinder, with rear face drill and tap fixing
Finish	SIL or SSE (other finishes on request)
Suitable for use with	296, 294, 294A, 285, 284, 297, 293, 293A
Accessories	Additional fixings for thicker doors available on request

Dimensions

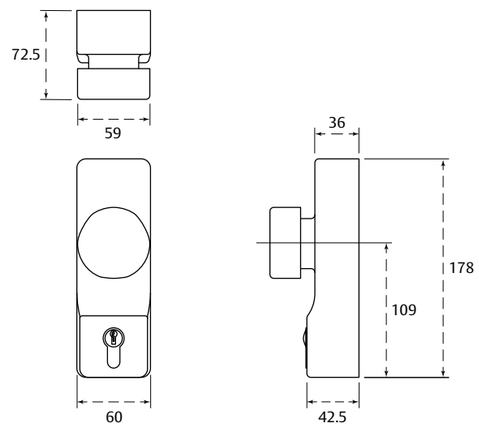

How to order

Order code	Description	Finish
302EA	Knob OAD without cylinder	SIL or SSE (plated)
302EC	Knob OAD with cylinder	SIL or SSE (plated)

Additional options:

- Indicate required finish when ordering (plated finishes not recommended for external use)
- Suffix order code with "RK" for key retention

322 lever outside access device

Exidor easy and convenient lever outside access device for use with 200 series and 300 series hardware.

Features and benefits

- For gaining entry through an escape door
- Lever design is simple and easy to open with hand, fist, elbow
- The lever dimensions help to meet the requirements of BS 8300 for a more inclusive building design
- Bolt through fixings make it suitable for steel or timber doors up to 65mm thick
- Available with or without Euro cylinder
- Locking the cylinder prevents access into the building but will not prevent escape out of the building

Testing and certification

UKCA / CE marked	As an approved accessory to the internal hardware
Certified in compliance with	Certified 200/300 series accessory as part of EN 1125 and EN 179
Suitable for fire doors	Timber FD30/FD60, metal FD120/FD240
Certifire approval	Yes – as an accessory to the internal hardware
Guarantee	10 years

Specification

Unit type	Outside access device
Activation	Lever handle
Door type	Single doorset. Rebated double doorset - active leaf. Plain meeting stile double doorset - either leaf
Door opening	Outward
Projection	88mm from door face
Mounting method	Surface mounted
Max door width	1220mm
Max door height	2440mm
Max door mass	Up to 200kg
Operation	Pushing the lever down retracts the internal bolts/latches. Releasing the lever returns the internal bolts/latches to the rest position
Handing	Universal
Cylinder specification for master keying needs	45mm single euro profile cylinder, with regular side face drill and tap fixing
Finish	SIL or SSE (other finishes on request)
Suitable for use with	296, 294, 294A, 285, 284, 297, 293, 293A
Accessories	Additional fixings for thicker doors available on request

Dimensions

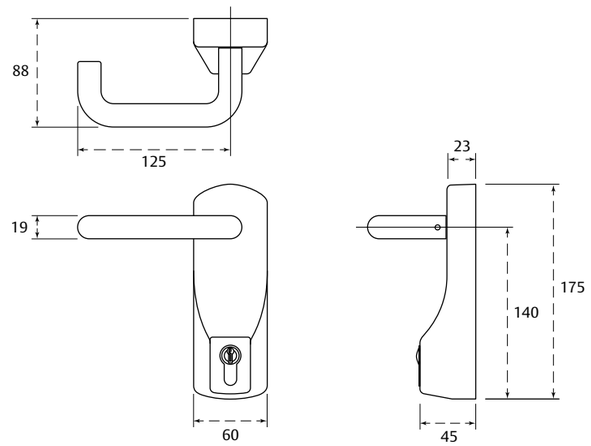

How to order

Order code	Description	Finish
322EA	Lever OAD without cylinder	SIL or SSE (plated)
322EC	Lever OAD with cylinder	SIL or SSE (plated)

• Indicate required finish when ordering (plated finishes not recommended for external use)

ASSA ABLOY
Opening Solutions

325 lever outside access device

Exidor easy and convenient lever outside access device for use with 200 series and 300 series hardware.

Features and benefits

- For gaining entry through an escape door
- Lever design is simple and easy to open with hand, fist, elbow
- The lever dimensions help to meet the requirements for BS 8300 for a more inclusive building design
- Bolt through fixings make it suitable for steel or timber doors up to 65mm thick
- Available with or without Euro cylinder
- Key retention model available
- Locking the cylinder prevents access into the building but will not prevent escape out of the building

Testing and certification

UKCA / CE marked	As an approved accessory to the internal hardware
Certified in compliance with	Certified 200/300 series accessory as part of EN 1125 and EN 179
Suitable for fire doors	No
Certifire approval	No
Guarantee	10 years

Specification

Unit type	Outside access device
Activation	Lever handle
Door type	Single doorset. Rebated double doorset - active leaf. Plain meeting stile double doorset - either leaf
Door opening	Outward
Projection	95mm from door face
Mounting method	Surface mounted
Max door width	1220mm
Max door height	2440mm
Max door mass	Up to 200kg
Operation	Pushing the lever down retracts the internal bolts/latches. Releasing the lever returns the internal bolts/latches to the rest position
Handing	Universal
Cylinder specification for master keying needs	45mm single euro profile cylinder, with regular side face drill and tap fixing
Finish	SIL or SSE (other finishes on request)
Suitable for use with	296, 294, 294A, 285, 284, 297, 293, 293A
Accessories	Additional fixings for thicker doors available on request

Dimensions

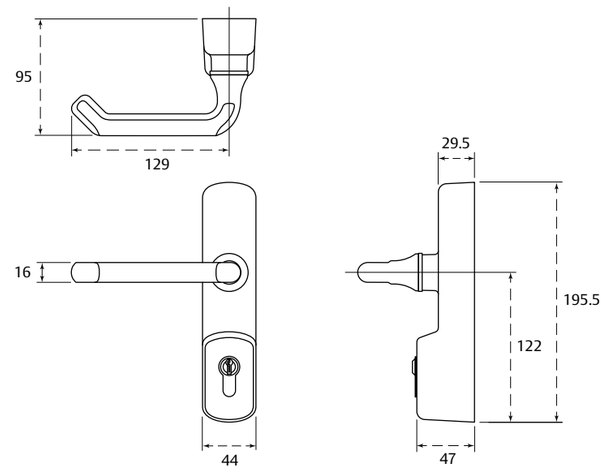

How to order

Order code	Description	Finish
325EA	Lever OAD without cylinder	SIL or SSE (plated)
325EC	Lever OAD with cylinder	SIL or SSE (plated)

Additional options:

- Indicate required finish when ordering (plated finishes not recommended for external use)
- Suffix order code with "RK" for key retention
- Suffix order code with "KA" for keyed alike

ASSA ABLOY
Opening Solutions

326 knob outside access device

Exidor T-shaped knob outside access device for use with 200 series and 300 series hardware.

Features and benefits

- For gaining entry through an escape door
- Bolt through fixings make it suitable for steel or timber doors up to 65mm thick
- Available with or without Euro cylinder
- Key retention model available
- Locking the cylinder prevents access into the building but will not prevent escape out of the building
- Suitable for low traffic access points such as staff entries

Testing and certification

UKCA / CE marked	As an approved accessory to the internal hardware
Certified in compliance with	Certified 200/300 series accessory as part of EN 1125 and EN 179
Suitable for fire doors	No
Certifire approval	No
Guarantee	10 years

Specification

Unit type	Outside access device
Activation	Knob handle
Door type	Single doorset. Rebated double doorset - active leaf. Plain meeting stile double doorset - either leaf
Door opening	Outward
Projection	76mm from door face
Mounting method	Surface mounted
Max door width	1220mm
Max door height	2440mm
Max door mass	Up to 200kg
Operation	Rotating the knob retracts the internal bolts/latches. Releasing the knob returns the internal bolts/latches to the rest position
Handing	Universal
Cylinder specification for master keying needs	45mm Euro profile cylinder, with side face drill and tap fixing
Finish	SIL or SSE (other finishes on request)
Suitable for use with	296, 294, 294A, 285, 284, 297, 293, 293A
Accessories	Additional fixings for thicker doors available on request

Dimensions

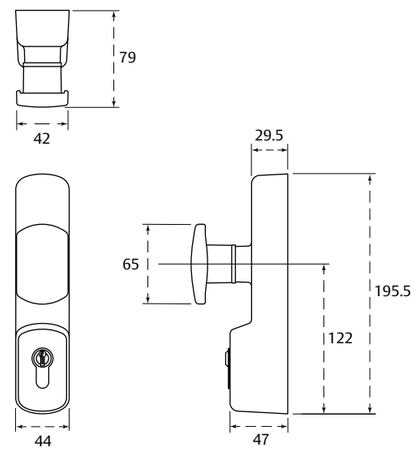

How to order

Order code	Description	Finish
326EA	Knob OAD without cylinder	SIL or SSE (plated)
326EC	Knob OAD with cylinder	SIL or SSE (plated)

Additional options:

- Indicate required finish when ordering (plated finishes not recommended for external use)
- Suffix order code with "RK" for key retention
- Suffix order code with "KA" for keyed alike

Slimline panic and emergency hardware

A European style range of panic and emergency hardware, our narrow style push bar and push pad range offers either robust shoot bolts or low friction Pullman latches. The versatile family includes surface mounted push bars and vertical rods which can be tailored on site to give a customised installation on each doorset.

With 38mm wide end units and comprehensive keep options, the 500 series is perfect for aluminium and UPVC doors, but is also a neat solution for timber and steel doors.

Offering both EN 1125 panic products and EN 179 emergency products the 500 series can provide a compliant range across public access areas and restricted areas of a building like schools and hospitals, where different zones of a building have different needs.

Range benefits

- 38mm wide footprint
- British manufactured
- UKCA / CE marked for safety and legal compliance
- 1, 2, 3, 4 or 5 point locking options
- Latch, Pullman latch or shoot bolt variants
- Surface mounted
- Single door or modular double door solutions
- Can be cut to fit each door leaf
- Suitable for use on aluminium, timber, UPVC doors or glazed doors
- Non-handed
- Available in a range of plated and powder coat finishes

ASSA ABLOY
Opening Solutions

501-B push bar panic latch

Exidor slimline single point locking panic latch.

Features and benefits

- Streamlined design
- Push bar design easily cut to size to suit different door widths
- Supplied with timber, aluminium or UPVC door keeps and fixings
- Range of outside access devices
- Microswitch option available
- Keeps available for alternative frame arrangements
- Ideal for higher aesthetic applications or to suit narrow door stiles

Classification code

3	7	6	B	1	3	2	2	A	A
(3)	(6-7)	(5-7)	(0/A/B)	(1)	(3-4)	(2)	(1-2)	(A/B)	(A-C)

EN 1125 :2008

Testing and certification

UKCA / CE marked	Yes
Certified in compliance with	EN 1125
Suitable for fire doors	Timber FD30/FD60/FD90/FD120, metal FD120/FD240
Certifire approval	Yes
Guarantee	10 years

Specification

Unit type	Panic unit
Activation	Push bar
Door type	Single doorset. Rebated double doorset - active leaf
Door opening	Outward
Projection	92mm from door face
Mounting method	Surface mounted bar
No. of locking points	1
Bolt style	Latch
Durability	200,000 cycles
Max door width	1220mm, bar can be cut to size on site
Max door height	2440mm
Max door mass	Up to 200kg
Operation	Pushing the bar down into door face retracts the latch. Releasing the bar returns the latch to the rest position
Handing	Universal – reversible latch
Finish	SIL or SSE (other finishes on request)
Accessories	See panic hardware accessory section for range of alternative keeps

Dimensions

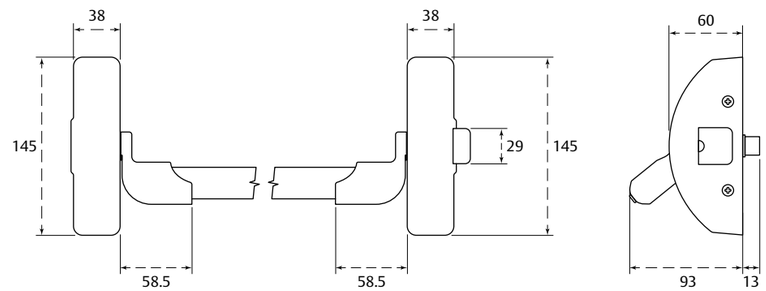

How to order

Order code	Description	Door type	Finish
501-B	Panic latch	Timber	SIL or SSE (plated)
501-B/AD	Panic latch	Aluminium	SIL or SSE (plated)
501-B/UD	Panic latch	UPVC	SIL or SSE (plated)

Additional options:

- Indicate required finish when ordering
- Suffix order code with "MS" for microswitch

502A-B, 512-B and 522-B push bar with 2 point locking

Exidor slimline two point locking panic bolt with shoot bolts, vertical or horizontal Pullman latches.

Features and benefits

- Two point locking secures door at the top and bottom of the leaf
- Push bar design easily cut to size to suit different door widths
- Supplied with timber, aluminium or UPVC door keeps and fixings
- Range of outside access devices
- Microswitch option available
- Keeps available for alternative frame arrangements
- Additional locking points makes these excellent solutions for exposed locations and harsher weather conditions

Classification code

3	7	6	B	1	3	2	2	A	A
(3)	(6-7)	(5-7)	(0/A/B)	(1)	(3-4)	(2)	(1-2)	(A/B)	(A-C)

EN 1125 :2008

Testing and certification

UKCA / CE marked	Yes
Certified in compliance with	EN 1125
Suitable for fire doors	Timber FD30/FD60/FD90/FD120, metal FD120/FD240
Certifire approval	Yes
Guarantee	10 years

Specification

Unit type	Panic unit
Activation	Push bar
Door type	Single doorset. Rebated double doorset - active leaf (522-B only). Rebated double doorset - inactive leaf (502A-B and 512-B only). Plain meeting stile double doorset - either leaf (502A-B and 512-B only)
Door opening	Outward
Projection	92mm from door face
Mounting method	Surface mounted bar
No. of locking points	2
Bolt style	502A-B adjustable shoot bolts, 512-B vertical Pullman latches, 522-B horizontal Pullman latches
Durability	200,000 cycles
Max door width	1220mm, bar can be cut to size on site
Max door height	2440mm
Max door mass	Up to 200kg
Operation	Pushing the bar down into door face retracts the bolts/latches. Releasing the bar returns the latches to the rest position. On 502A-B, the bolts remain retracted until automatically released on closing of the door
Handing	Universal
Finish	SIL or SSE (other finishes on request)
Accessories	See panic hardware accessory section for range of alternative keeps

Dimensions

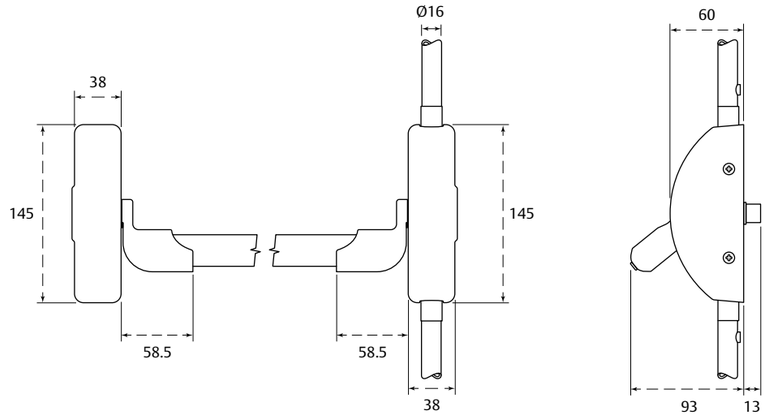

How to order

Order code	Description	Door type	Finish
502-B	Panic adjustable bolt	Timber	SIL or SSE (plated)
512-B	Panic vertical Pullman latches	Timber	SIL or SSE (plated)
522-B	Panic horizontal Pullman latches	Timber	SIL or SSE (plated)

Additional options:

- Indicate required finish when ordering
- Suffix order code with "/AD" for aluminium door type or "/UD" for UPVC door type
- Suffix order code with "MS" for microswitch

ASSA ABLOY
Opening Solutions

503A-B, 513-B and 523-B push bar with 3 point locking

Exidor slimline three point locking panic bolt with shoot bolts, vertical or horizontal Pullman latches.

Features and benefits

- Three point locking from central latch and either adjustable shoot bolts or Pullman latches
- Push bar design easily cut to size to suit different door widths
- Supplied with timber, aluminium or UPVC door keeps and fixings
- Range of outside access devices
- Microswitch option available
- Keeps available for alternative frame arrangements
- Ideal for higher aesthetic applications or to suit narrow door stiles

Classification code

3	7	6	B	1	3	2	2	A	A
(3)	(6-7)	(5-7)	(0/A/B)	(1)	(3-4)	(2)	(1-2)	(A/B)	(A-C)

EN 1125 :2008

Testing and certification

UKCA / CE marked	Yes
Certified in compliance with	EN 1125
Suitable for fire doors	Timber FD30/FD60/FD90/FD120, metal FD120/FD240
Certifire approval	Yes
Guarantee	10 years

Specification

Unit type	Panic unit
Activation	Push bar
Door type	Single doorset. Rebated double doorset - active leaf.
Door opening	Outward
Projection	92mm from door face
Mounting method	Surface mounted bar
No. of locking points	3
Bolt style	503A-B adjustable shoot bolts, 513-B vertical Pullman latches, 523-B horizontal Pullman latches
Durability	200,000 cycles
Max door width	1220mm, bar can be cut to size on site
Max door height	2440mm
Max door mass	Up to 200kg
Operation	Pushing the bar down into door face retracts the bolts/latches. Releasing the bar returns the latches to the rest position. On 503A-B, the bolts remain retracted until automatically released on closing of the door
Handing	Universal
Finish	SIL or SSE (other finishes on request)
Accessories	See panic hardware accessory section for range of alternative keeps

Dimensions

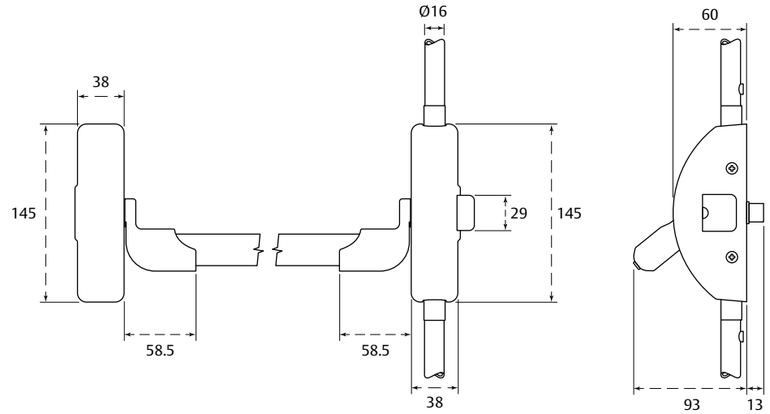

How to order

Order code	Description	Door type	Finish
503-B	Panic adjustable bolt	Timber	SIL or SSE (plated)
513-B	Panic vertical Pullman latches	Timber	SIL or SSE (plated)
523-B	Panic horizontal Pullman latches	Timber	SIL or SSE (plated)

Additional options:

- Indicate required finish when ordering
- Suffix order code with "MS" for microswitch
- Suffix order code with "/AD" for aluminium door type or "/UD" for UPVC door type

Rebated door – slimline push bar

Modular slimline push bar solutions to suit rebated double doorsets

Three point locking

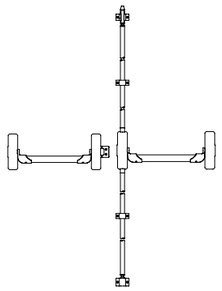

501-B + 502A-B + SL-0144*

Four point locking

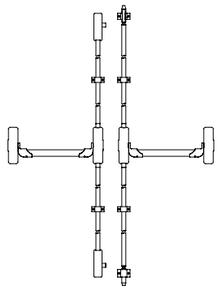

522B + 502A-B + 406A + 406A*

Five point locking

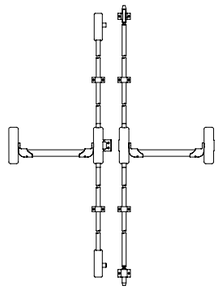

523-B + 502A-B + SL-0144 + 406A + 406A*

Three point locking

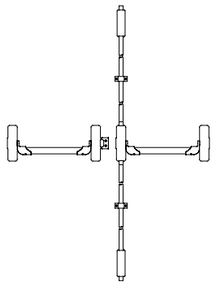

501-B + 512B + SL-0144*

Four point locking

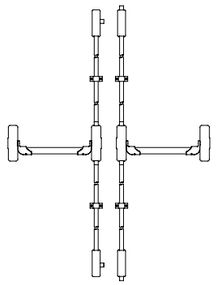

522B + 512-B + 406A + 406A*

Five point locking

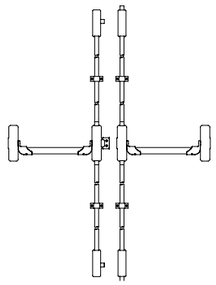

523-B + 512-B + SL-0144 + 406A + 406A*

* Keep - see panic hardware accessories for more details

How to order

Product code	Description	Finish
501-B + 502A-B + SL-0144*	Push bar panic bolt with adjustable shoots and push bar latch	SIL or SSE (plated)
522B + 502A-B + 2No 406A*	Push bar panic bolt with adjustable shoots and push bar with 2 horizontal latches	SIL or SSE (plated)
523-B + 502A-B + SL-0144* + 2No 406A*	Push bar panic bolt with adjustable shoots and push bar with 3 horizontal latches	SIL or SSE (plated)
501-B + 512-B + SL-0144*	Push bar panic bolt with vertical latches and push bar latch	SIL or SSE (plated)
522B + 512-B + 2No 406A*	Push bar panic bolt with vertical latches and push bar with 2 horizontal latches	SIL or SSE (plated)
523B + 512-B + SL-0144* + 2No 406A*	Push bar panic bolt with vertical latches and push bar with 3 horizontal latches	SIL or SSE (plated)

Additional options:

- Please confirm required finish when ordering
- Supplied with timber door fixings as standard
- Suffix order code with "/AD" for aluminium door type or "/UD" for UPVC door type

Non-rebated door – slimline push bar

Modular slimline push bar solutions to suit non-rebated double doorsets

Four point locking

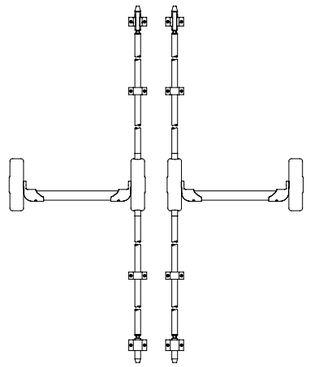

502A-B + 502A-B

Five point Llocking

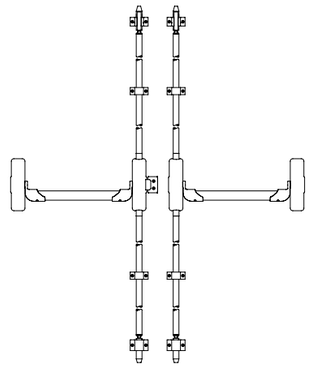

503A-B + 502A-B + SL-0144*

Four point locking

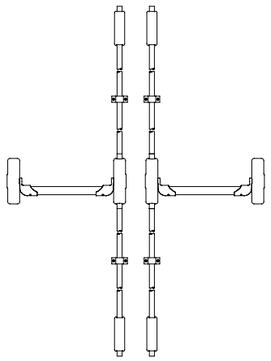

512-B + 512-B

Five point locking

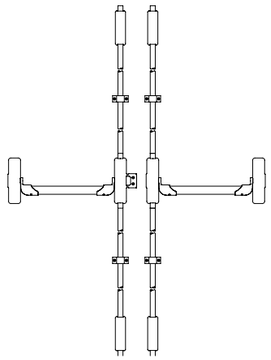

513-B + 512-B + SL-0144*

* Keep - see panic hardware accessories for more details

How to order

Product code	Description	Finish
502A-B + 502A-B	Two sets of push bar panic bolts with adjustable shoots	SIL or SSE (plated)
503A-B + 502A-B + SL-0144*	Push bar panic bolt and 3 point push bar panic bolt, both with adjustable shoots	SIL or SSE (plated)
512-B + 512-B	Two sets of push bars with 2 vertical latches	SIL or SSE (plated)
513-B + 512-B + SL-0144*	Push bar with 2 vertical latches and push bar with 2 vertical and 1 horizontal latch	SIL or SSE (plated)

Additional options:

- Please confirm required finish when ordering
- Supplied with timber door fixings as standard
- Suffix order code with "/AD" for aluminium door type or "/UD" for UPVC door type

ASSA ABLOY
Opening Solutions

501-P push pad latch

Exidor slimline single point locking emergency push pad latch.

Features and benefits

- Compact push pad latch design ideal for restricted access buildings
- Supplied with timber, aluminium or UPVC door keeps and fixings
- Range of outside access devices
- Keeps available for alternative frame arrangements
- Ideal for higher aesthetic applications or to suit narrow door stiles

Classification code

3	7	6	B	1	3	2	2	B	A
(3)	(6-7)	(5-7)	(0/A/B)	(1)	(3-4)	(2-5)	(1-2)	(A/B)	(A-D)

EN 179 :2008

Testing and certification

UKCA / CE marked	Yes
Certified in compliance with	EN 179
Suitable for fire doors	Timber FD30/FD60/FD90/FD120, metal FD120/FD240
Certifire approval	Yes
Guarantee	10 years

Specification

Unit type	Emergency unit
Activation	Push pad
Door type	Single doorset. Rebated double doorset - active leaf
Door opening	Outward
Projection	92mm from door face
Mounting method	Surface mounted pad
No. of locking points	1
Bolt style	Latch
Durability	200,000 cycles
Max door width	1220mm
Max door height	2440mm
Max door mass	Up to 200kg
Operation	Pushing the pad down into door face retracts the latch. Releasing the pad returns the latch to the rest position
Handing	Universal – reversible latch
Finish	SIL or SSE (other finishes on request)
Accessories	See panic hardware accessory section for range of alternative keeps

Dimensions

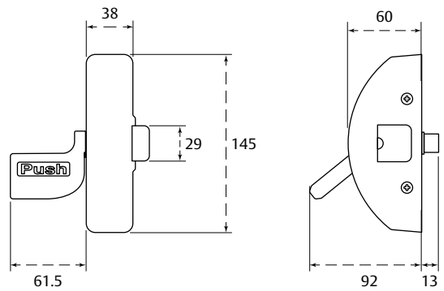

How to order

Order code	Description	Door type	Finish
501-P	Emergency latch for timber doors	Timber	SIL or SSE (plated)
501-P/AD	Emergency latch for aluminium doors	Aluminium	SIL or SSE (plated)
501-P/UD	Emergency latch for UPVC doors	UPVC	SIL or SSE (plated)

• Indicate required finish when ordering

502A-P, 512-P and 522-P push pad with 2 point locking

Exidor slimline two point locking emergency bolt with shoot bolts, vertical or horizontal Pullman latches.

Features and benefits

- Two point locking by either shoot bolts or Pullman latches
- Supplied with timber, aluminium or steel door keeps and fixings
- Range of outside access devices
- Keeps available for alternative frame arrangements
- Push pad suited to restricted access buildings
- Ideal for higher aesthetic applications or to suit narrow door stiles

Classification code

3	7	6	B	1	3	2	2	B	A
(3)	(6-7)	(5-7)	(0/A/B)	(1)	(3-4)	(2-5)	(1-2)	(A/B)	(A-D)

EN 179 :2008

Testing and certification

UKCA / CE marked	Yes
Certified in compliance with	EN 179
Suitable for fire doors	Timber FD30/FD60/FD90/FD120, metal FD120/FD240
Certifire approval	Yes
Guarantee	10 years

Specification

Unit type	Emergency unit
Activation	Push pad
Door type	Single doorset. Rebated double doorset - active leaf (522-P only). Rebated double doorset - inactive leaf (502A-P and 512-P only). Plain meeting stile double doorset - either leaf (502A-P and 512-P only)
Door opening	Outward
Projection	92mm from door face
Mounting method	Surface mounted pad
No. of locking points	2
Bolt style	502A-P adjustable shoot bolts, 512-P vertical Pullman latches, 522-P horizontal Pullman latches
Durability	200,000 cycles
Max door width	1220mm
Max door height	2440mm
Max door mass	Up to 200kg
Operation	Pushing the pad down into door face retracts the bolts/latches. Releasing the pad returns the latches to the rest position. On 502A-P, the bolts remain retracted until automatically released on closing of the door
Handing	Universal
Finish	SIL or SSE (other finishes on request)
Accessories	See panic hardware accessory section for range of alternative keeps

Dimensions

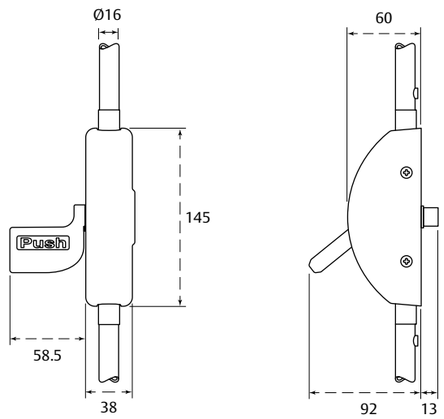

How to order

Order code	Description	Door type	Finish
502-P	Emergency adjustable bolt	Timber	SIL or SSE (plated)
512-P	Emergency vertical Pullman latches	Timber	SIL or SSE (plated)
522-P	Emergency horizontal Pullman latches	Timber	SIL or SSE (plated)

Additional options:

- Indicate required finish when ordering
- Suffix order code with "MS" for microswitch
- Suffix order code with "/AD" for aluminium door type or "/UD" for UPVC door type

ASSA ABLOY
Opening Solutions

503A-P, 513-P and 523-P push pad with 3 point locking

Exidor slimline three point locking emergency bolt with shoot bolts, vertical or horizontal Pullman latches.

Features and benefits

- Three point locking with central latch and either shoot bolts or Pullman latches
- Supplied with timber, aluminium or UPVC door keeps and fixings
- Range of outside access devices
- Keeps available for alternative frame arrangements
- Push pad suited to restricted access buildings
- Additional locking points help doors seal against adverse weather conditions

Classification code

3	7	6	B	1	3	2	2	B	A
(3)	(6-7)	(5-7)	(0/A/B)	(1)	(3-4)	(2-5)	(1-2)	(A/B)	(A-D)

EN 179 :2008

Testing and certification

UKCA / CE marked	Yes
Certified in compliance with	EN 179
Suitable for fire doors	Timber FD30/FD60/FD90/FD120, metal FD120/FD240
Certifire approval	Yes
Guarantee	10 years

Specification

Unit type	Emergency unit
Activation	Push pad
Door type	Single doorset. Rebated double doorset - active leaf
Door opening	Outward
Projection	92mm from door face
Mounting method	Surface mounted pad
No. of locking points	3
Bolt style	503A-P adjustable shoot bolts, 513-P vertical Pullman latches, 523-P horizontal Pullman latches
Durability	200,000 cycles
Max door width	1220mm
Max door height	2440mm
Max door mass	Up to 200kg
Operation	Pushing the pad down into door face retracts the bolts/latches. Releasing the pad returns the latches to the rest position. On 503A-P, the bolts remain retracted until automatically released on closing of the door
Handing	Universal
Finish	SIL or SSE (other finishes on request)
Accessories	See panic hardware accessory section for range of alternative keeps

Dimensions

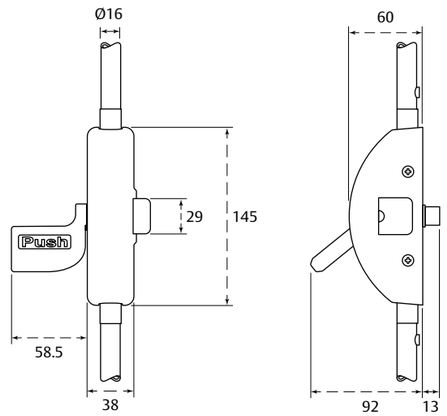

How to order

Order code	Description	Door type	Finish
503-P	Emergency adjustable bolt	Timber	SIL or SSE (plated)
513-P	Emergency vertical Pullman latches	Timber	SIL or SSE (plated)
523-P	Emergency horizontal Pullman latches	Timber	SIL or SSE (plated)

Additional options:

- Indicate required finish when ordering
- Suffix order code with "MS" for microswitch
- Suffix order code with "/AD" for aluminium door type or "/UD" for UPVC door type

Rebated door – slimline push pad

Modular slimline push pad solutions to suit rebated double doorsets

Three point locking

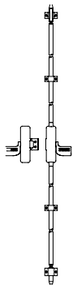

501-P + 502A-P + SL-0144*

Four point locking

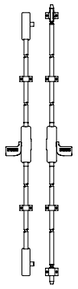

522P + 502A-P + 406A + 406A*

Five point locking

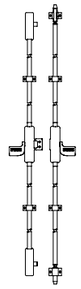

523-P + 502A-P + SL-0144 + 406A + 406A*

Three point locking

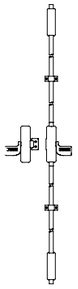

501-P + 512P + SL-0144*

Four point locking

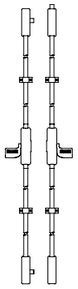

522P + 512-P + 406A + 406A*

Five point locking

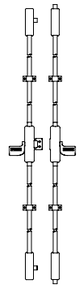

523-P + 512-P + SL-0144 + 406A + 406A*

* Keep - see panic hardware accessories for more details

How to order

Product code	Description	Finish
501-P + 502A-P + SL-0144*	Push pad bolt with adjustable shoots and push pad latch	SIL or SSE (plated)
522P + 502A-P + 2No 406A*	Push pad bolt with adjustable shoots and push pad with 2 horizontal latches	SIL or SSE (plated)
523P + 502A-P + SL-0144* + 2No 406A*	Push pad bolt with adjustable shoots and push pad with 3 horizontal latches	SIL or SSE (plated)
501-P + 512P + SL-0144*	Push pad bolt with vertical latches and push pad latch	SIL or SSE (plated)
522P + 512-P + 2No 406A*	Push pad bolt with vertical latches and push pad with 2 horizontal latches	SIL or SSE (plated)
523P + 512-P + SL-0144* + 2No 406A*	Push pad bolt with vertical latches and push pad with 3 horizontal latches	SIL or SSE (plated)

Additional options:

- Please confirm required finish when ordering
- Supplied with timber door fixings as standard
- Suffix order code with "/AD" for aluminium door type or "/UD" for UPVC door type

Non-rebated door – slimline push pad

Modular slimline push pad solutions to suit non-rebated double doorsets

Four point locking

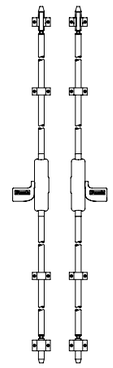

502A-P + 502A-P

Five point locking

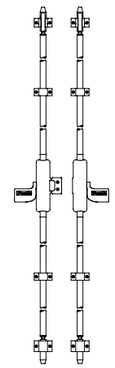

503A-P + 502A-P + SL-0144*

Four point locking

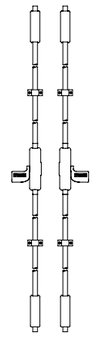

512-P + 512-P

Five point locking

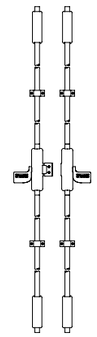

513-P + 512-P + SL-0144*

* Keep - see panic hardware accessories for more details

How to order

Product code	Description	Finish
502A-P + 502A-P	Two sets of push pad bolts with adjustable shoots	SIL or SSE (plated)
503A-P + 502A-P + SL-0144*	Push pad bolt and 3 point push pad bolt, both with adjustable shoots	SIL or SSE (plated)
512-P + 512-P	Two sets of push pads with 2 vertical latches	SIL or SSE (plated)
513P + 512-P + SL-0144*	Push pad with 2 vertical latches and push pad with 2 vertical and 1 horizontal latch	SIL or SSE (plated)

Additional options:

- Please confirm required finish when ordering
- Suffix order code with "/AD" for aluminium door type or "/UD" for UPVC door type
- **Supplied with timber door fixings as standard.** Suffix order code with "/AD" for aluminium door type or "/UD" for UPVC door type

525 lever outside access device

Exidor easy and convenient lever outside access device for use with 500 series hardware.

Features and benefits

- Lever design is simple and easy to open with hand, fist, elbow
- Helps meet BS 8300 requirements for barrier free access
- Bolt through fixings make it suitable for all door types up to 65mm thick
- Available with or without Euro cylinder
- Locking the cylinder prevents access into the building but will not prevent escape out of the building
- Excellent for high traffic areas like staff or goods-in entrances to a factory or industrial environment

Testing and certification

UKCA / CE marked	As an approved accessory to the internal hardware
Certified in compliance with	Certified 500 series accessory as part of EN 1125 and EN 179
Suitable for fire doors	No
Certifire approval	No
Guarantee	10 years

Specification

Unit type	Outside access device
Activation	Lever handle
Door type	Single doorset. Rebated double doorset - active leaf. Plain meeting stile double doorset - either leaf
Door opening	Outward
Projection	95mm from door face
Mounting method	Surface mounted
Max door width	1220mm
Max door height	2440mm
Max door mass	Up to 200kg
Operation	Pushing the lever down retracts the internal bolts/latches. Releasing the lever returns the internal bolts/latches to the rest position
Handing	Universal
Cylinder specification for master keying needs	45mm Euro profile cylinder, with side face drill and tap fixing
Finish	SIL or SSE (other finishes on request)
Suitable for use with	501-B, 502A-B, 512-B, 522-B, 503A-B, 513-B, 523-B, 501-P, 502A-P, 512-P, 522-P, 503A-P, 513-P, 523-P
Accessories	Additional fixings for thicker doors available on request

Dimensions

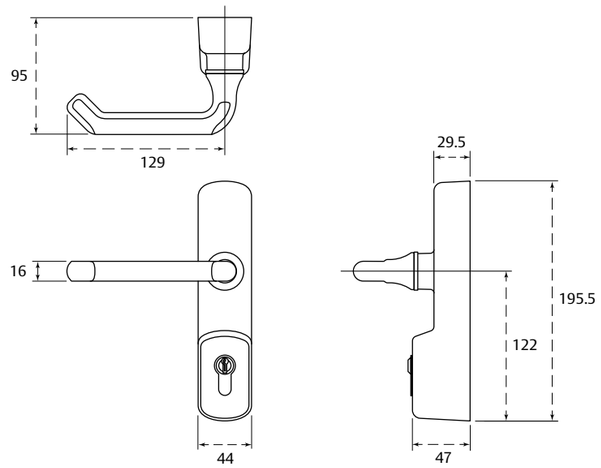

How to order

Order code	Description	Finish
525EA	Lever OAD without cylinder	SIL or SSE (plated)
525EC	Lever OAD with cylinder	SIL or SSE (plated)

Additional options:

- Indicate required finish when ordering (plated finishes not recommended for external use)
- Suffix order code with "RK" for key retention
- Suffix order code with "KA" for keyed alike

526 knob outside access device

Exidor T-shaped knob outside access device for use with 500 series hardware.

Features and benefits

- Compact design
- Bolt through fixings make it suitable for all door types up to 65mm thick
- Available with or without Euro cylinder
- Locking the cylinder prevents access into the building but will not prevent escape out of the building
- Suitable for access points such as staff entries

Testing and certification

UKCA / CE marked	As an approved accessory to the internal hardware
Certified in compliance with	Certified 500 series accessory as part of EN 1125 and EN 179
Suitable for fire doors	No
Certifire approval	No
Guarantee	10 years

Specification

Unit type	Outside access device
Activation	Knob handle
Door type	Single doorset. Rebated double doorset - active leaf. Plain meeting stile double doorset - either leaf
Door opening	Outward
Projection	76mm from door face
Mounting method	Surface mounted
Max door width	1220mm
Max door height	2440mm
Max door mass	Up to 200kg
Operation	Rotating the knob retracts the internal bolts/latches. Releasing the knob returns the internal bolts/latches to the rest position
Handing	Universal
Cylinder specification for master keying needs	45mm Euro profile cylinder, with side face drill and tap fixing
Finish	SIL or SSE (other finishes on request)
Suitable for use with	501-B, 502A-B, 512-B, 522-B, 503A-B, 513-B, 523-B, 501-P, 502A-P, 512-P, 522-P, 503A-P, 513-P, 523-P
Accessories	Additional fixings for thicker doors available on request

Dimensions

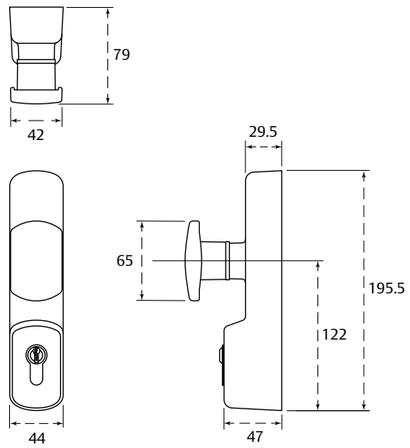

How to order

Order code	Description	Finish
526EA	Knob OAD without cylinder	SIL or SSE (plated)
526EC	Knob OAD with cylinder	SIL or SSE (plated)

Additional options:

- Indicate required finish when ordering (plated finishes not recommended for external use)
- Suffix order code with "RK" for key retention
- Suffix order code with "KA" for keyed alike

Touch bar panic hardware

Compliant with EN 1125, our touch bars are designed to sit flush to the door. The flush fit means that objects cannot be trapped behind the bar, and the patented lip prevents jamming, making them ideal for use in areas where they may be abused such as schools, universities and hospitals.

The low projection of our touch bars ensure that they are also perfect for use in sports halls and gymnasiums, as there is less protrusion which reduces risk of accidental contact.

Manufactured in Britain to the highest standards, the elegant design of the 400 series touch bar provides a stylish solution for the most integrated of interiors. This range also features Pullman latches throughout, offering soft and quiet locking.

Range benefits

- British manufactured
- Patented lip design prevents accidental jamming of touch bar
- UKCA / CE marked for safety
- 1, 2, 3, 4 or 5 point locking
- Horizontal or vertical Pullmans latches
- Two standard sizes, others available on request
- Single door or modular double door solutions
- Accessories include an alarm unit that sounds when touch bar activated
- Non-handed
- Available in a range of plated and powder coat finishes

ASSA ABLOY
Opening Solutions

400 and 401 touch bar panic latch

Exidor single point locking touch bar panic latch.

Features and benefits

- Touch bar available in two standard sizes to suit doors up to 900mm or 1200mm wide
- Range of outside access devices
- Microswitch, alarm and hold back dogging options
- Supplied with keeps and fixings
- Keeps available for alternative frame arrangements
- Sleek design combined with smooth operation to give a solution ideal for use in front of house or other public areas

Classification code

3	7	6	B	1	3	2	2	B	A
(3)	(6-7)	(5-7)	(0/A/B)	(1)	(3-4)	(2)	(1-2)	(A/B)	(A-C)

EN 1125 :2008

Testing and certification

UKCA / CE marked	Yes
Certified in compliance with	EN 1125
Suitable for fire doors	Timber FD30/FD60/FD90/FD120, metal FD120/FD240
Certifire approval	Yes
Guarantee	10 years

Specification

Unit type	Panic unit
Activation	Touch bar
Door type	Single doorset. Rebated double doorset - active leaf
Door opening	Outward
Projection	62mm from door face
Mounting method	Surface mounted bar
No. of locking points	1
Bolt style	Latch
Durability	200,000 cycles
Max door width	2 options of fixed bar length as standard, other sizes on request
Max door height	2440mm
Max door mass	Up to 200kg
Operation	Pressing the bar into door face retracts the latch bolt. Releasing the bar returns the latch bolt to the rest position
Handing	Universal
Finish	SIL or SSE (other finishes on request)
Accessories	See panic hardware accessory section for range of alternative keeps

Dimensions

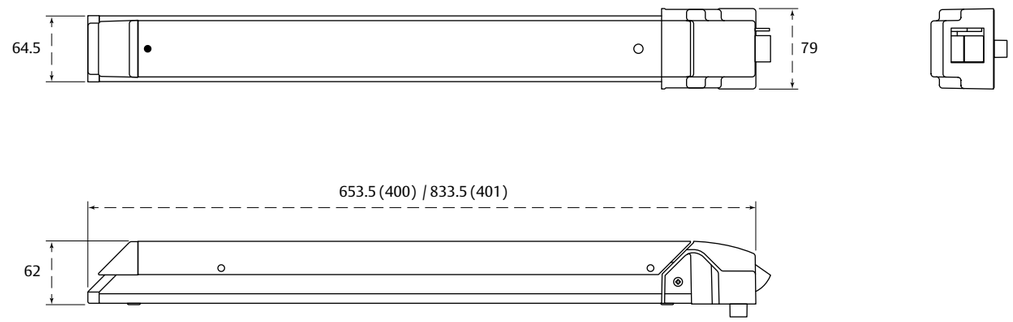

How to order

Order code	Description	Door width	Finish
400	Standard touch bar panic latch	692 to 900mm	SIL or SSE (plated)
401	Wide touch bar panic latch	872 to 1200mm	SIL or SSE (plated)

Additional options:

- Indicate required finish when ordering
- Suffix order code with "MS" for microswitch
- Suffix order code with "AL" for alarm
- Suffix order code with "WD" for dogging (holdback) – not suitable for fire doors
- Bar widths are set sizes with other sizes available on request

402 and 403 touch bar with 2 point locking

Exidor panic touch bar with two vertical Pullman latches.

Features and benefits

- Vertical Pullman latches with two point locking for panic escape
- Two standard sizes to suit doors up to 900mm or 1200mm wide
- Range of outside access devices
- Microswitch, alarm and hold back dogging options
- Supplied with keeps and fixings
- Keeps available for alternative frame arrangements
- Ideal for sports halls, public access areas and front of house applications

Classification code

3	7	6	B	1	3	2	2	B	A
(3)	(6-7)	(5-7)	(0/A/B)	(1)	(3-4)	(2)	(1-2)	(A/B)	(A-C)

EN 1125 :2008

Testing and certification

UKCA / CE marked	Yes
Certified in compliance with	EN 1125
Suitable for fire doors	Timber FD30/FD60/FD90/FD120, metal FD120/FD240
Certifire approval	Yes
Guarantee	10 years

Specification

Unit type	Panic unit
Activation	Touch bar
Door type	Single doorset. Rebated double doorset - inactive leaf. Plain meeting stile double doorset - either leaf
Door opening	Outward
Projection	62mm from door face
Mounting method	Surface mounted bar
No. of locking points	2
Bolt style	Vertical Pullman latches
Durability	200,000 cycles
Max door width	2 options of fixed bar length as standard, other sizes on request
Max door height	2440mm
Max door mass	Up to 200kg
Operation	Pressing the bar into door face retracts the latches. Releasing the bar returns the latch bolts to the rest position
Handing	Universal
Finish	SIL or SSE (other finishes on request)
Accessories	See panic hardware accessory section for range of alternative keeps

Dimensions

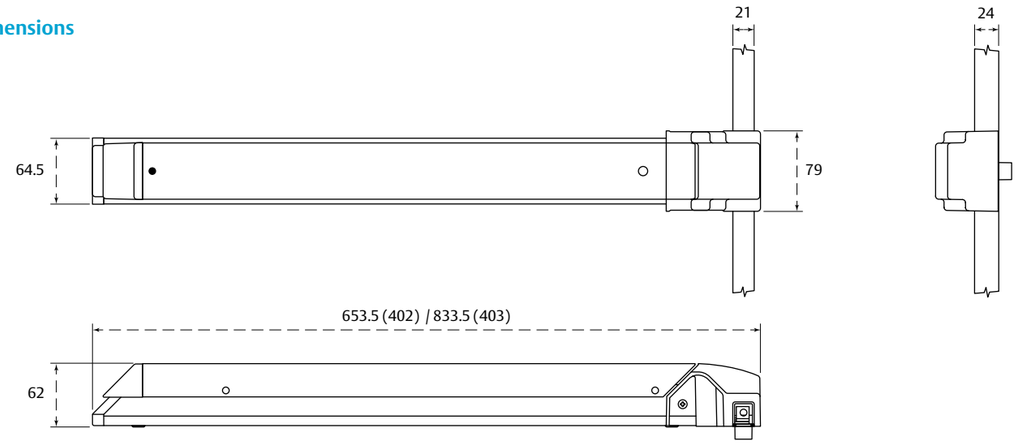

How to order

Order code	Description	Door width	Finish
402	Standard touch bar panic vertical latches	692 to 900mm	SIL or SSE (plated)
403	Wide touch bar panic vertical latches	872 to 1200mm	SIL or SSE (plated)

Additional options:

- Indicate required finish when ordering
- Suffix order code with "MS" for microswitch
- Suffix order code with "AL" for alarm
- Suffix order code with "WD" for dogging (holdback) – not suitable for fire doors
- Bar widths are set sizes with other sizes available on request

ASSA ABLOY
Opening Solutions

416 and 417 touch bar with 2 point locking

Exidor panic touch bar with two horizontal Pullman latches.

Features and benefits

- Horizontal Pullman latches offer two point locking
- Two standard sizes to suit doors up to 900mm or 1200mm wide
- Range of finishes, options and outside access devices
- Microswitch, alarm and hold back dogging options
- Supplied with keeps and fixings
- Keeps available for alternative frame arrangements
- Ideal for public access areas such as schools and leisure facilities

Classification code

3	7	6	B	1	3	2	2	B	A
(3)	(6-7)	(5-7)	(0/A/B)	(1)	(3-4)	(2)	(1-2)	(A/B)	(A-C)

EN 1125 :2008

Testing and certification

UKCA / CE marked	Yes
Certified in compliance with	EN 1125
Suitable for fire doors	Timber FD30/FD60/FD90/FD120, metal FD120/FD240
Certifire approval	Yes
Guarantee	10 years

Specification

Unit type	Panic unit
Activation	Touch bar
Door type	Single doorset. Rebated double doorset - active leaf
Door opening	Outward
Projection	62mm from door face
Mounting method	Surface mounted bar
No. of locking points	2
Bolt style	Horizontal Pullman latches
Durability	200,000 cycles
Max door width	2 options of fixed bar length as standard, other sizes on request
Max door height	2440mm
Max door mass	Up to 200kg
Operation	Pressing the bar into door face retracts the latches. Releasing the bar returns the latch bolts to the rest position
Handing	Universal
Finish	SIL or SSE (other finishes on request)
Accessories	See panic hardware accessory section for range of alternative keeps

Dimensions

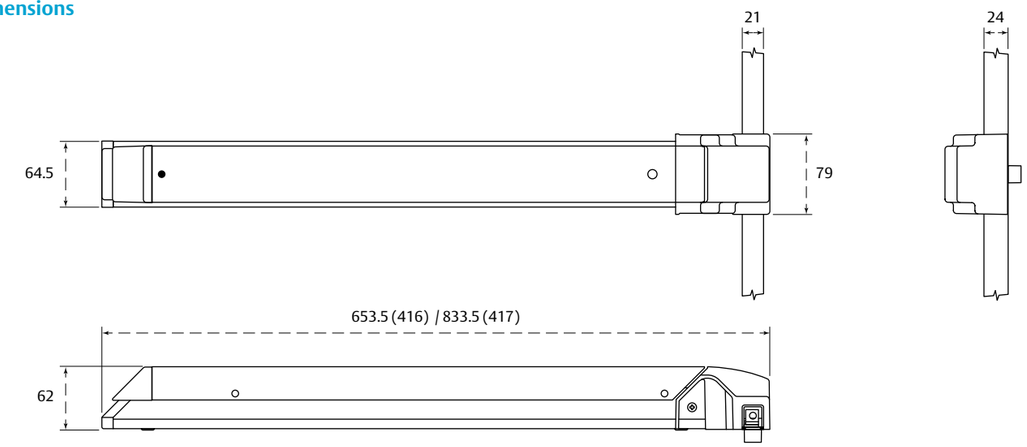

How to order

Order code	Description	Door width	Finish
416	Standard touch bar panic vertical latches	692 to 900mm	SIL or SSE (plated)
417	Wide touch bar panic vertical latches	872 to 1200mm	SIL or SSE (plated)

Additional options:

- Indicate required finish when ordering
- Bar widths are set sizes with other sizes available on request

ASSA ABLOY
Opening Solutions

404 and 405 touch bar with 3 point locking

Exidor panic touch bar with central latch and vertical Pullman latches.

Features and benefits

- Vertical Pullman latches with three point locking
- Two standard sizes to suit doors up to 900mm or 1200mm wide
- Range of outside access devices
- Microswitch, alarm and hold back dogging options
- Supplied with keeps and fixings
- Keeps available for alternative frame arrangements
- Ideal for sports halls, public access areas and front of house applications

Classification code

3	7	6	B	1	3	2	2	B	A
(3)	(6-7)	(5-7)	(0/A/B)	(1)	(3-4)	(2)	(1-2)	(A/B)	(A-C)

EN 1125 :2008

Testing and certification

UKCA / CE marked	Yes
Certified in compliance with	EN 1125
Suitable for fire doors	Timber FD30/FD60/FD90/FD120, metal FD120/FD240
Certifire approval	Yes
Guarantee	10 years

Specification

Unit type	Panic unit
Activation	Touch bar
Door type	Single doorset
Door opening	Outward
Projection	62mm from door face
Mounting method	Surface mounted bar
No. of locking points	3
Bolt style	Vertical Pullman latches
Durability	200,000 cycles
Max door width	2 options of fixed bar length as standard, other sizes on request
Max door height	2440mm
Max door mass	Up to 200kg
Operation	Pressing the bar into door face retracts the latches. Releasing the bar returns the latch bolts to the rest position
Handing	Universal
Finish	SIL or SSE (other finishes on request)
Accessories	See panic hardware accessory section for range of alternative keeps

Dimensions

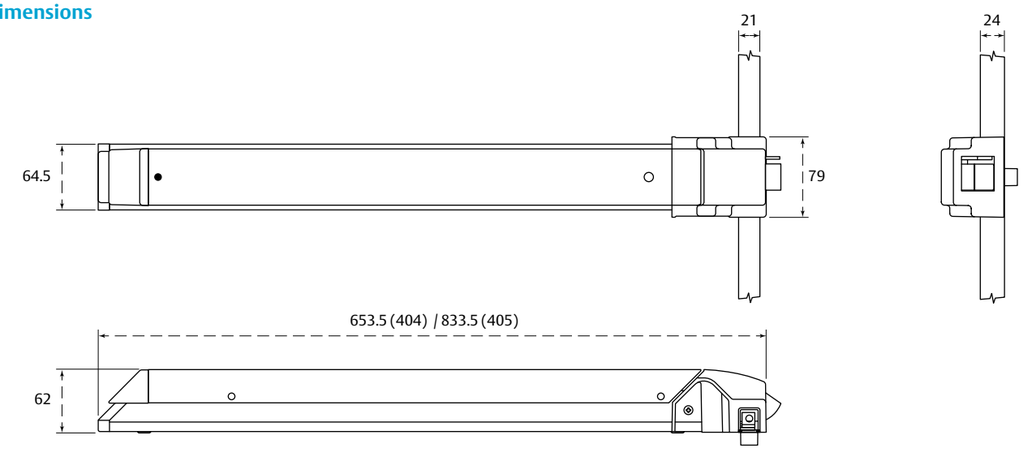

How to order

Order code	Description	Door width	Finish
404	Standard touch bar panic vertical Pullman latches	692 to 900mm	SIL or SSE (plated)
405	Wide touch bar panic vertical Pullman latches	872 to 1200mm	SIL or SSE (plated)

Additional options:

- Indicate required finish when ordering
- Suffix order code with "MS" for microswitch
- Suffix order code with "AL" for alarm
- Suffix order code with "WD" for dogging (holdback) – not suitable for fire doors
- Bar widths are set sizes with other sizes available on request

ASSA ABLOY
Opening Solutions

418 and 419 touch bar with 3 point locking

Exidor panic touch bar with central latch and horizontal Pullman latches.

Features and benefits

- Horizontal Pullman latches with three point locking
- Two standard sizes to suit doors up to 900mm or 1200mm wide
- Range of finishes, options and outside access devices
- Microswitch, alarm and hold back dogging options
- Supplied with keeps and fixings
- Keeps available for alternative frame arrangements
- Ideal for sports halls, public access areas and front of house applications

Classification code

3	7	6	B	1	3	2	2	B	A
(3)	(6-7)	(5-7)	(0/A/B)	(1)	(3-4)	(2)	(1-2)	(A/B)	(A-C)

EN 1125 :2008

Testing and certification

UKCA / CE marked	Yes
Certified in compliance with	EN 1125
Suitable for fire doors	Timber FD30/FD60/FD90/FD120, metal FD120/FD240
Certifire approval	Yes
Guarantee	10 years

Specification

Unit type	Panic unit
Activation	Touch bar
Door type	Single doorset. Rebated double doorset - active leaf
Door opening	Outward
Projection	62mm from door face
Mounting method	Surface mounted bar
No. of locking points	3
Bolt style	Horizontal Pullman latches
Durability	200,000 cycles
Max door width	2 options of fixed bar length as standard, other sizes on request
Max door height	2440mm
Max door mass	Up to 200kg
Operation	Pressing the bar into door face retracts the latches. Releasing the bar returns the latch bolts to the rest position
Handing	Universal
Finish	SIL or SSE (other finishes on request)
Accessories	See panic hardware accessory section for range of alternative keeps

Dimensions

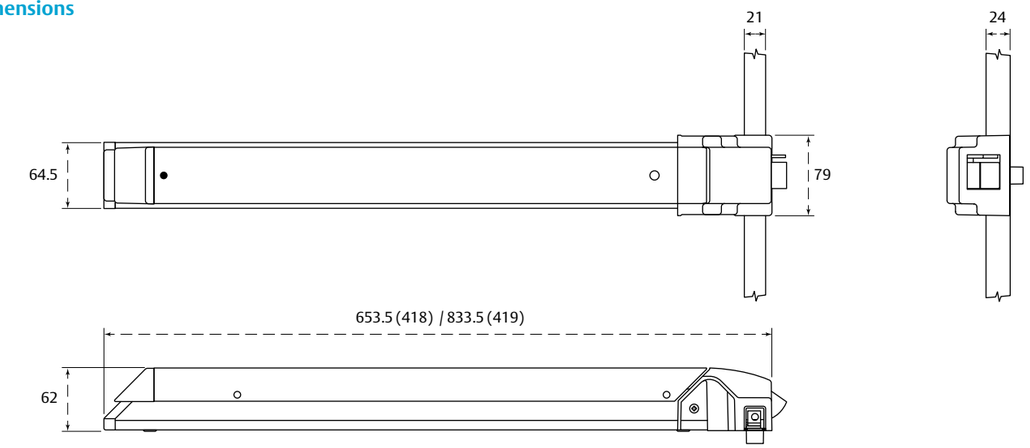

How to order

Order code	Description	Door width	Finish
418	Standard touch bar panic horizontal Pullman latches	692 to 900mm	SIL or SSE (plated)
419	Wide touch bar panic horizontal Pullman latches	872 to 1200mm	SIL or SSE (plated)

Additional options:

- Indicate required finish when ordering
- Suffix order code with "MS" for microswitch
- Suffix order code with "AL" for alarm
- Suffix order code with "WD" for dogging (holdback) – not suitable for fire doors
- Bar widths are set sizes with other sizes available on request

ASSA ABLOY
Opening Solutions

420 and 421 touch bar mortice actuator

Exidor touch bar panic mortice actuator with Euro profile cylinder lock.

Features and benefits

- Morticed into the door leaf, offering a hidden latch when closed
- Supplied complete with Euro cylinder nightlatch (cylinder not included)
- Two standard sizes to suit doors up to 900mm or 1200mm wide
- Microswitch and alarm options
- Supplied with timber or steel door fixings
- Mortice lock offers more protection against abuse on the inside of the door
- Ideal for low traffic doors in public areas such as schools or healthcare premises requiring key entry only

Classification code

3	7	6	0	1	3	2	2	B	A
(3)	(6-7)	(5-7)	(0/A/B)	(1)	(3-4)	(2)	(1-2)	(A/B)	(A-C)

EN 1125 :2008

Testing and certification

UKCA / CE marked	Yes
Certified in compliance with	EN 1125
Suitable for fire doors	No
Certifire approval	No
Guarantee	10 years

Specification

Unit type	Panic unit
Activation	Touch bar
Door type	Single doorset
Door opening	Outward
Projection	62mm from door face
Mounting method	Surface mounted bar
No. of locking points	1
Bolt style	Mortice nightlatch (Euro profile cylinder driven)
Durability	200,000 cycles
Max door width	2 options of fixed bar length as standard, other sizes on request
Max door height	2440mm
Max door mass	Up to 200kg
Operation	Pressing the bar into door face retracts the mortice lock latch. Releasing the bar returns the mortice lock latch to the rest position
Handing	Universal
Finish	SIL or SSE (other finishes on request)
Accessories	See panic hardware accessory section for rebate kits

Dimensions

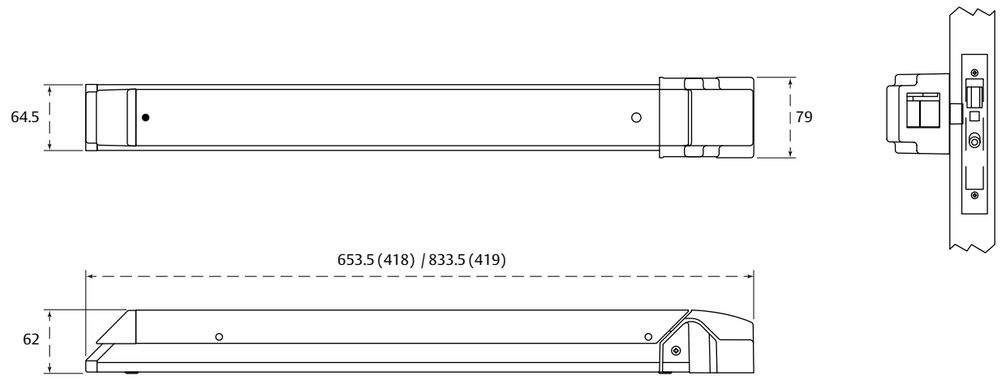

How to order

Order code	Description	Door width	Finish
420	Standard touch bar panic mortice nightlatch	692 to 900mm	SIL or SSE (plated)
421	Wide touch bar panic mortice nightlatch	872 to 1200mm	SIL or SSE (plated)

Additional options:

- Indicate required finish when ordering
- Suffix order code with "MS" for microswitch
- Suffix order code with "AL" for alarm
- Bar widths are set sizes with other sizes available on request

Rebated double doors – touch bar

Modular touch bar solutions to suit rebated double doorsets

Three point locking

Door width (min - max)
692mm - 900mm

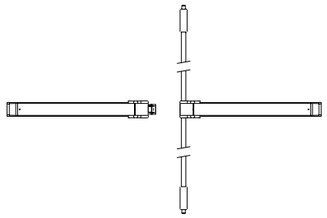

400 + 402 + 406B*

Four point locking

Door width (min - max)
692mm - 900mm

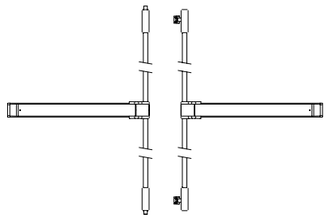

402 + 416 + 2No 406A*

Five point locking

Door width (min - max)
692mm - 900mm

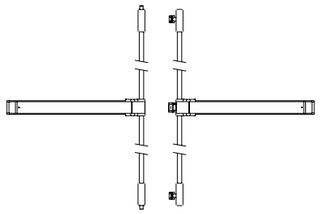

402 + 418 + 406B + 2No 406A*

Three point locking

Door width (min - max)
872mm - 1200mm

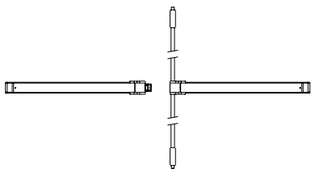

401 + 403 + 406B*

Four point locking

Door width (min - max)
872mm - 1200mm

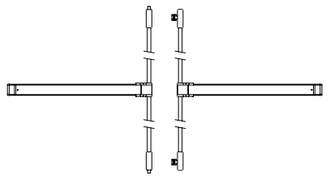

403 + 417 + 2No 406A*

Five point locking

Door width (min - max)
872mm - 1200mm

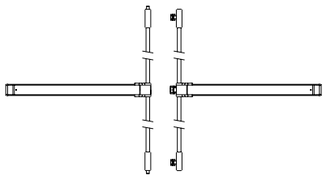

403 + 419 + 406B + 2No 406A*

* Keep - see panic hardware accessories for more details

How to order

Product code	Description	Door width	Finish
400+ 402 + 406B*	Panic latch and panic bolt with vertical Pullman latches	692 to 900mm	SIL or SSE (plated)
401 + 403 + 406B*	Panic latch and panic bolt with vertical Pullman latches	872 to 1200mm	SIL or SSE (plated)
402 + 416+ 2No 406A*	Panic bolt with horizontal Pullman latches and panic bolt with vertical Pullman latches	692 to 900mm	SIL or SSE (plated)
403 + 417 + 2No 406A*	Panic bolt with horizontal Pullman latches and panic bolt with vertical Pullman latches	872 to 1200mm	SIL or SSE (plated)
402+ 418 + 406B + 2No 406A*	Panic bolt with horizontal Pullman latches and 3 point panic bolt with vertical Pullman latches	692 to 900mm	SIL or SSE (plated)
403 + 419 + 406B + 2No 406A*	Panic bolt with horizontal Pullman latches and 3 point panic bolt with vertical Pullman latches	872 to 1200mm	SIL or SSE (plated)

• Please confirm required finish when ordering

Non-rebated double doors – touch bar

Modular touch bar solutions to suit non-rebated double doorsets

Four point locking

Door width (min - max)
692mm - 900mm

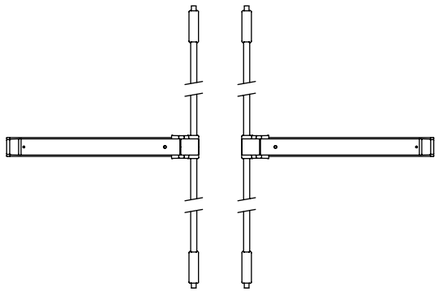

402 + 402

Four point locking

Door width (min - max)
872mm - 1200mm

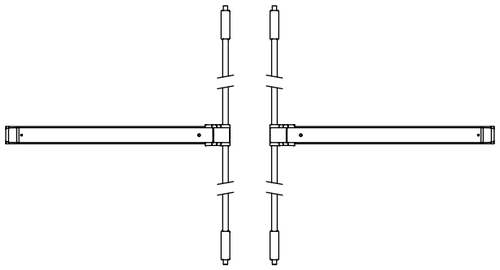

403 + 403

* Keep - see panic hardware accessories for more details

How to order

Product code	Description	Door width	Finish
402 + 402	2 x Panic bolt with vertical Pullman latches	692 to 900mm	SIL or SSE (plated)
403 + 403	2 x Panic bolt with vertical Pullman latches	872 to 1200mm	SIL or SSE (plated)

• Please confirm required finish when ordering

425 lever outside access device

Exidor easy and convenient lever outside access device for use with 400 series hardware.

Features and benefits

- Lever design is simple and easy to open with hand, fist, elbow
- Helps meet BS 8300 requirements for barrier free access
- Bolt through fixings make it suitable for steel or timber doors up to 58mm thick
- Available with or without Euro cylinder
- Locking the cylinder prevents access into the building but will not prevent escape out of the building
- Excellent for access doors like factory or retail unit's staff entry points

Testing and certification

UKCA / CE marked	As an approved accessory to the internal hardware
Certified in compliance with	Certified 400 series accessory as part of EN 1125 and EN 179
Suitable for fire doors	No
Certifire approval	No
Guarantee	10 years

Specification

Unit type	Outside access device
Activation	Lever handle
Door type	Single doorset. Rebated double doorset - active leaf. Plain meeting stile double doorset - either leaf
Door opening	Outward
Projection	95mm from door face
Mounting method	Surface mounted
Max door width	1220mm
Max door height	2440mm
Max door mass	Up to 200kg
Operation	Pushing the lever down retracts the internal bolts/latches. Releasing the lever returns the internal bolts/latches to the rest position
Handing	Universal
Finish	SIL or SSE (other finishes on request)
Cylinder specification for master keying needs	45mm Euro profile cylinder, with side face drill and tap fixing
Suitable for use with	400, 401, 402, 403, 416, 417, 404, 405, 418, 419
Accessories	Additional fixings for thicker doors available on request

Dimensions

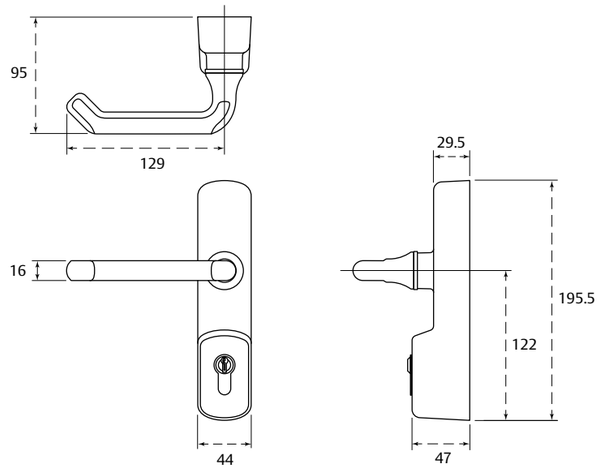

How to order

Order code	Description	Finish
425EA	Lever OAD without cylinder	SIL or SSE (plated)
425EC	Lever OAD with cylinder	SIL or SSE (plated)

Additional options:

- Indicate required finish when ordering (plated finishes not recommended for external use)
- Suffix order code with "RK" for key retention
- Suffix order code with "KA" for keyed alike

426 knob outside access device

Exidor T-shaped knob outside access device for use with 400 series hardware.

Features and benefits

- Compact design
- Bolt through fixings make it suitable for steel or timber doors up to 58mm thick
- Available with or without Euro cylinder
- Locking the cylinder prevents access into the building but will not prevent escape out of the building
- Excellent for low traffic areas like staff entry doors to small commercial premises

Testing and certification

UKCA / CE marked	As an approved accessory to the internal hardware
Certified in compliance with	Certified 400 series accessory as part of EN 1125 and EN 179
Suitable for fire doors	No
Certifire approval	No
Guarantee	10 years

Specification

Unit type	Outside access device
Activation	Knob handle
Door type	Single doorset. Rebated double doorset - active leaf. Plain meeting stile double doorset - either leaf
Door opening	Outward
Projection	76mm from door face
Mounting method	Surface mounted
Max door width	1220mm
Max door height	2440mm
Max door mass	Up to 200kg
Operation	Rotating the knob retracts the internal bolts/latches. Releasing the knob returns the internal bolts/latches to the rest position
Handing	Universal
Finish	SIL or SSE (other finishes on request)
Cylinder specification for master keying needs	45mm Euro profile cylinder, with side face drill and tap fixing
Suitable for use with	400, 401, 402, 403, 416, 417, 404, 405, 418, 419
Accessories	Additional fixings for thicker doors available on request

Dimensions

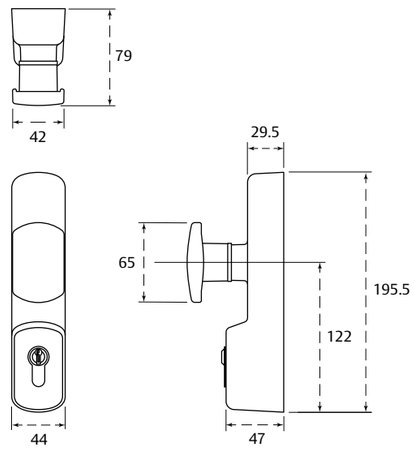

How to order

Order code	Description	Finish
426EA	Knob OAD without cylinder	SIL or SSE (plated)
426EC	Knob OAD with cylinder	SIL or SSE (plated)

Additional options:

- Indicate required finish when ordering (plated finishes not recommended for external use)
- Suffix order code with "RK" for key retention
- Suffix order code with "KA" for keyed alike

Touch bar electronic latch retraction hardware

Electronic latch retraction (ELR) enables full integration with any access control system to give improved security without compromising on safety.

The core elements of the range are identical to the mechanical solution within our 400 touch bar series. The hardware sits flush to the door and can be activated at any time by pushing the touch bar to retract latches/bolts, giving complete peace of mind that safe egress is always possible, even in the event of total power loss.

The external operation of the ELR can be controlled by an access control interface unit such as a simple card swipe or biometric reader. This means only pre-approved users will be able to enter the building through that door. When a valid request is made, a concealed motor immediately retracts the bolts to allow access into the building.

Range benefits

- Access control integration for superior perimeter security
- Electronic hold back (dogging) as standard
- British manufactured
- Patented lip design prevents accidental jamming of touch bar
- Environmentally friendly as only consumes power to open the door (and not required to hold it shut) so low power usage and operating costs
- UKCA / CE marked for safety
- 24V DC low voltage
- Two standard sizes, others available on request
- Available in a range of plated and powder coat finishes

TB450 and TB451 electronic latch retraction touch bar panic latch

Exidor single point locking electronic latch retraction touch bar panic latch.

Features and benefits

- Suitable for use with access control systems
- Touch bar available in two standard sizes to suit doors up to 900mm or 1200mm wide
- Built-in electronic dogging
- Low power usage, from a 24V DC 1A power supply (source separately)
- Microswitch and alarm options
- Supplied with keeps and fixings
- Keeps available for alternative frame arrangements
- Ideal for schools and commercial applications, where greater awareness of security is required

Classification code

3	7	6	0	1	3	2	2	B	A
(3)	(6-7)	(5-7)	(0/A/B)	(1)	(3-4)	(2)	(1-2)	(A/B)	(A-C)

EN 1125 :2008

Testing and certification

UKCA / CE marked	Yes
Certified in compliance with	EN 1125
Suitable for fire doors	No
Certifire approval	No
Guarantee	1 year

Specification

Unit type	Panic unit
Activation	Touch bar
Door type	Single doorset. Rebated double doorset - active leaf
Door opening	Outward
Projection	62mm from door face
Mounting method	Surface mounted bar
No. of locking points	1
Bolt style	Latch
Durability	200,000 cycles
Max door width	2 options of fixed bar length as standard, other sizes on request
Max door height	2440mm
Max door mass	Up to 200kg
Operation	Pressing the bar into door face retracts the mortice lock latch. Releasing the bar returns the mortice lock latch to the rest position
Handing	Universal
Finish	SIL or SSE (other finishes on request)
Accessories	See panic hardware accessory section for range of alternative keeps

Dimensions

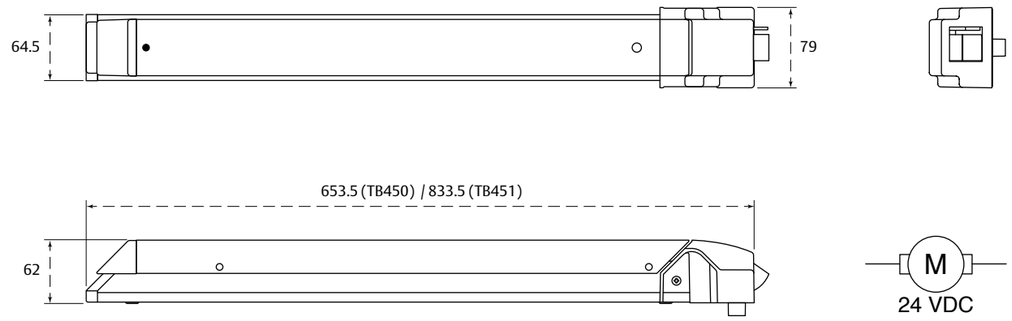

How to order

Order code	Description	Door width	Finish
TB450	Standard ELR touch bar panic latch	692 to 900mm	SIL or SSE (plated)
TB451	Wide ELR touch bar panic latch	872 to 1200mm	SIL or SSE (plated)

Additional options:

- Indicate required finish when ordering
- Suffix order code with "MS" for microswitch
- Suffix order code with "AL" for alarm
- Bar widths are set sizes with other sizes available on request

ASSA ABLOY
Opening Solutions

TB452 and TB453 electronic latch retraction touch bar with 2 point locking

Exidor two point locking electronic latch retraction panic touch bar with two vertical Pullman latches.

Features and benefits

- Suitable for use with access control systems
- Two standard sizes to suit doors up to 900mm or 1200mm wide
- Built-in electronic dogging
- Low power usage, from a 24V DC 1A power supply (source separately)
- Microswitch and alarm options
- Supplied with keeps and fixings
- Keeps available for alternative frame arrangements
- Ideal for banking and financial institutes, where greater awareness of security is required

Classification code

3	7	6	0	1	3	2	2	B	A
(3)	(6-7)	(5-7)	(0/A/B)	(1)	(3-4)	(2)	(1-2)	(A/B)	(A-C)

EN 1125 :2008

Testing and certification

UKCA / CE marked	Yes
Certified in compliance with	EN 1125
Suitable for fire doors	No
Certifire approval	No
Guarantee	1 year

Specification

Unit type	Panic unit
Activation	Touch bar
Door type	Single doorset. Rebated double doorset - inactive leaf. Plain meeting stile double doorset - either leaf
Door opening	Outward
Projection	62mm from door face
Mounting method	Surface mounted bar
No. of locking points	2
Bolt style	Vertical Pullman latches
Durability	200,000 cycles
Max door width	2 options of fixed bar length as standard, other sizes on request
Max door height	2440mm
Max door mass	Up to 200kg
Operation	Pressing the bar into door face retracts the Pullman latches. Releasing the bar returns the Pullman latches to the rest position
Handing	Universal
Finish	SIL or SSE (other finishes on request)
Accessories	See panic hardware accessory section for range of alternative keeps

Dimensions

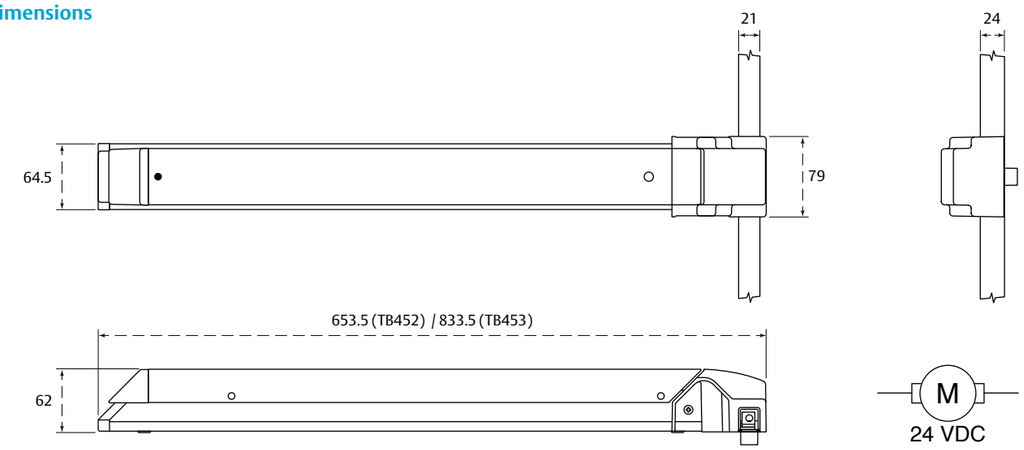

How to order

Order code	Description	Door width	Finish
TB452	Standard ELR touch bar panic vertical Pullman latches	692 to 900mm	SIL or SSE (plated)
TB453	Wide ELR touch bar panic vertical Pullman latches	872 to 1200mm	SIL or SSE (plated)

Additional options:

- Indicate required finish when ordering
- Suffix order code with "MS" for microswitch
- Suffix order code with "AL" for alarm
- Bar widths are set sizes with other sizes available on request

TB466 and TB467 electronic latch retraction touch bar with 2 point locking

Exidor two point locking electronic latch retraction panic touch bar with two horizontal Pullman latches.

Features and benefits

- Suitable for use with access control systems
- Two standard sizes to suit doors up to 900mm or 1200mm wide
- Built-in electronic dogging
- Low power usage, from a 24V DC 1A power supply (source separately)
- Microswitch and alarm options
- Supplied with keeps and fixings
- Keeps available for alternative frame arrangements
- Ideal for industrial sites, where greater awareness of security is required

Classification code

3	7	6	0	1	3	2	2	B	A
(3)	(6-7)	(5-7)	(0/A/B)	(1)	(3-4)	(2)	(1-2)	(A/B)	(A-C)

EN 1125 :2008

Testing and certification

UKCA / CE marked	Yes
Certified in compliance with	EN 1125
Suitable for fire doors	No
Certifire approval	No
Guarantee	1 year

Specification

Unit type	Panic unit
Activation	Touch bar
Door type	Single doorset. Rebated double doorset - inactive leaf
Door opening	Outward
Projection	62mm from door face
Mounting method	Surface mounted bar
No. of locking points	2
Bolt style	Horizontal Pullman latches
Durability	200,000 cycles
Max door width	2 options of fixed bar length as standard, other sizes on request
Max door height	2440mm
Max door mass	Up to 200kg
Operation	Pressing the bar into door face retracts the Pullman latches. Releasing the bar returns the Pullman latches to the rest position
Handing	Universal
Finish	SIL or SSE (other finishes on request)
Accessories	See panic hardware accessory section for range of alternative keeps

Dimensions

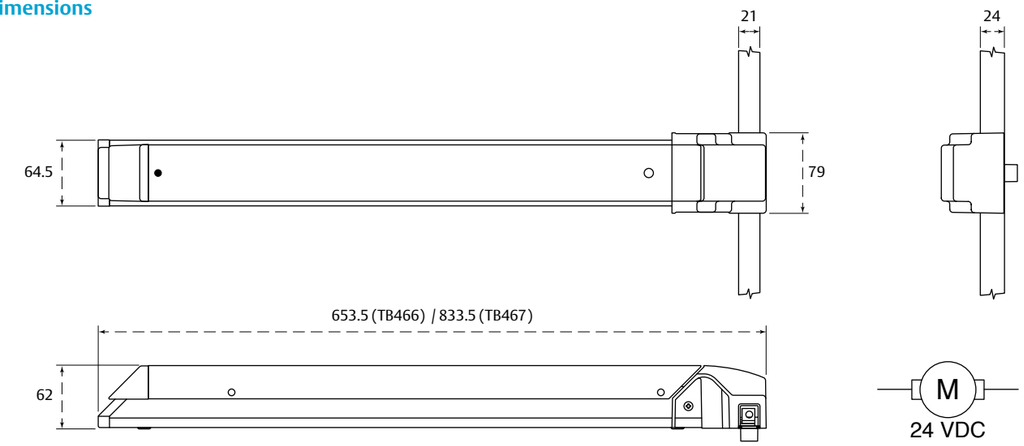

How to order

Order code	Description	Door width	Finish
TB466	Standard ELR touch bar panic horizontal Pullman latches	692 to 900mm	SIL or SSE (plated)
TB467	Wide ELR touch bar panic horizontal Pullman latches	872 to 1200mm	SIL or SSE (plated)

Additional options:

- Indicate required finish when ordering
- Suffix order code with "MS" for microswitch
- Suffix order code with "AL" for alarm
- Bar widths are set sizes with other sizes available on request

TB454 and TB455 electronic latch retraction touch bar with 3 point locking

Exidor three point locking electronic latch retraction panic touch bar with central latch and vertical Pullman latches.

Features and benefits

- Suitable for use with access control systems
- Two standard sizes to suit doors up to 900mm or 1200mm wide
- Built-in electronic dogging
- Low power usage, from a 24V DC 1A power supply (source separately)
- Microswitch and alarm options
- Supplied with keeps and fixings
- Keeps available for alternative frame arrangements
- Ideal for data centers, where greater awareness of security is required

Classification code

3	7	6	0	1	3	2	2	B	A
(3)	(6-7)	(5-7)	(0/A/B)	(1)	(3-4)	(2)	(1-2)	(A/B)	(A-C)

EN 1125 :2008

Testing and certification

UKCA / CE marked	Yes
Certified in compliance with	EN 1125
Suitable for fire doors	No
Certifire approval	No
Guarantee	1 year

Specification

Unit type	Panic unit
Activation	Touch bar
Door type	Single doorset
Door opening	Outward
Projection	62mm from door face
Mounting method	Surface mounted bar
No. of locking points	3
Bolt style	Central latch and vertical Pullman latches
Durability	200,000 cycles
Max door width	2 options of fixed bar length as standard, other sizes on request
Max door height	2440mm
Max door mass	Up to 200kg
Operation	Pressing the bar into door face retracts the central and Pullman latches Releasing the bar returns the central and Pullman latches to the rest position
Handing	Universal
Finish	SIL or SSE (other finishes on request)
Accessories	See panic hardware accessory section for range of alternative keeps

Dimensions

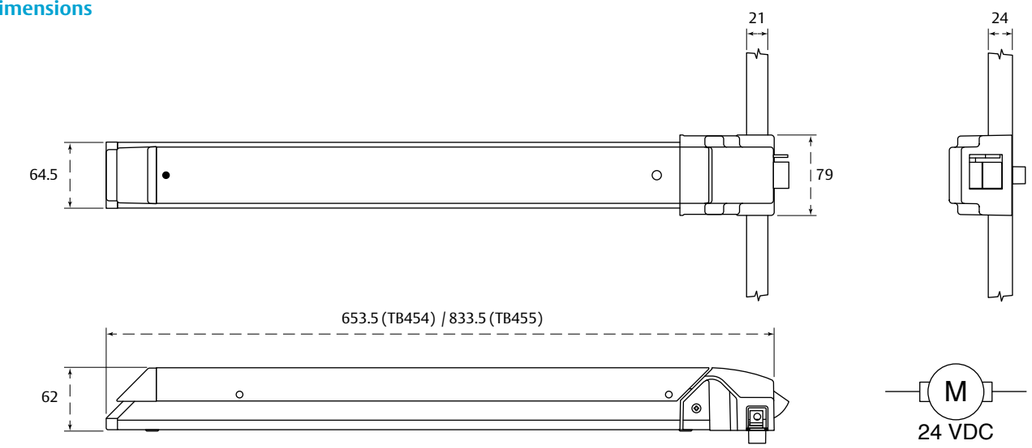

How to order

Order code	Description	Door width	Finish
TB454	Standard ELR touch bar panic vertical Pullman latches	692 to 900mm	SIL or SSE (plated)
TB455	Wide ELR touch bar panic unit vertical Pullman latches	872 to 1200mm	SIL or SSE (plated)

Additional options:

- Indicate required finish when ordering
- Suffix order code with "MS" for microswitch
- Suffix order code with "AL" for alarm
- Bar widths are set sizes with other sizes available on request

ASSA ABLOY
Opening Solutions

TB468 and TB469 electronic latch retraction touch bar with 3 point locking

Exidor three point locking electronic latch retraction panic touch bar with central latch and horizontal Pullman latches.

Features and benefits

- Suitable for use with access control systems
- Two standard sizes to suit doors up to 900mm or 1200mm wide
- Built-in electronic dogging
- Low power usage, from a 24V DC 1A power supply (source separately)
- Microswitch and alarm options
- Supplied with keeps and fixings
- Keeps available for alternative frame arrangements
- Ideal for schools and commercial applications, where greater awareness of security is required

Classification code

3	7	6	0	1	3	2	2	B	A
(3)	(6-7)	(5-7)	(0/A/B)	(1)	(3-4)	(2)	(1-2)	(A/B)	(A-C)

EN 1125 :2008

Testing and certification

UKCA / CE marked	Yes
Certified in compliance with	EN 1125
Suitable for fire doors	No
Certifire approval	No
Guarantee	1 year

Specification

Unit type	Panic unit
Activation	Touch bar
Door type	Single doorset. Rebated double doorset - active leaf
Door opening	Outward
Projection	62mm from door face
Mounting method	Surface mounted bar
No. of locking points	3
Bolt style	Central latch and horizontal Pullman latches
Durability	200,000 cycles
Max door width	2 options of fixed bar length as standard, other sizes on request
Max door height	2440mm
Max door mass	Up to 200kg
Operation	Pressing the bar into door face retracts the central and Pullman latches Releasing the bar returns the central and Pullman latches to the rest position
Handing	Universal
Finish	SIL or SSE (other finishes on request)
Accessories	See panic hardware accessory section for range of alternative keeps

Dimensions

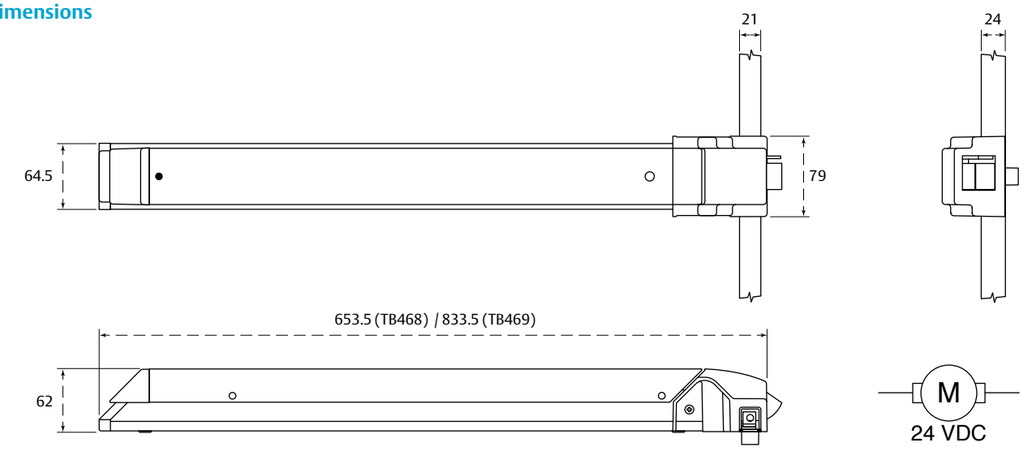

How to order

Order code	Description	Door width	Finish
TB468	Standard ELR touch bar panic horizontal Pullman latches	692 to 900mm	SIL or SSE (plated)
TB469	Wide ELR touch bar panic unit horizontal Pullman latches	872 to 1200mm	SIL or SSE (plated)

Additional options:

- Indicate required finish when ordering
- Suffix order code with "MS" for microswitch
- Suffix order code with "AL" for alarm
- Bar widths are set sizes with other sizes available on request

Rebated double doors – electronic latch retraction

Modular electronic latch retraction solutions to suit rebated double doorsets

Three point locking

Door width (min - max)
692mm - 900mm

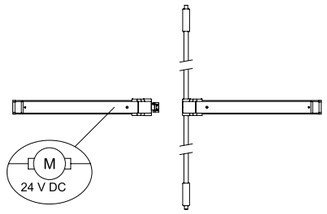

TB450 + 402 + 406B*

Four point locking

Door width (min - max)
692mm - 900mm

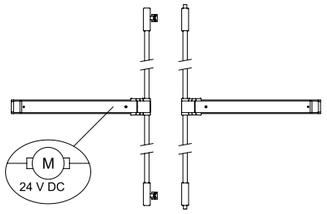

TB466 + 402 + 2No 406A*

Five point locking

Door width (min - max)
692mm - 900mm

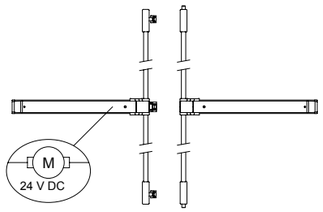

TB468 + 402 + 406B + 2No 406A*

Three point locking

Door width (min - max)
872mm - 1200mm

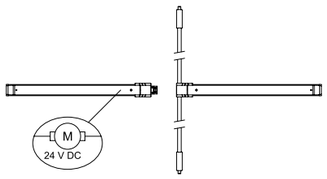

TB451 + 402 + 406B*

Four point locking

Door width (min - max)
872mm - 1200mm

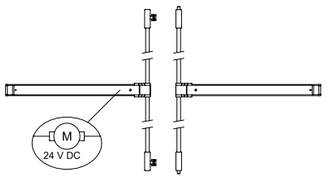

TB467 + 402 + 2No 406A*

Five point locking

Door width (min - max)
872mm - 1200mm

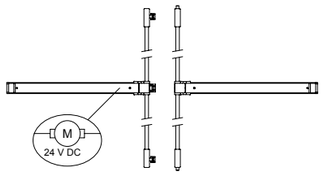

TB469 + 402 + 406B + 2No 406A*

* Keep - see panic hardware accessories for more details

How to order

Product code	Description	Door width	Finish
TB450 + 402 + 406B*	ELR panic latch and touch bar panic bolt with vertical Pullman latches	692 to 900mm	SIL or SSE (plated)
TB451 + 403 + 406B*	ELR panic latch and touch bar panic bolt with vertical Pullman latches	872 to 1200mm	SIL or SSE (plated)
TB466 + 402 + 2No 406A*	ELR with 2 horizontal latches and touch bar panic bolt with vertical Pullman latches	692 to 900mm	SIL or SSE (plated)
TB467 + 403 + 2No 406A*	ELR with 2 horizontal latches and touch bar panic bolt with vertical Pullman latches	872 to 1200mm	SIL or SSE (plated)
TB468 + 402 + 406B + 2No 406A*	ELR with 3 horizontal latches and touch bar panic bolt with vertical Pullman latches	692 to 900mm	SIL or SSE (plated)
TB469 + 403 + 406B + 2No 406A*	ELR with 3 horizontal latches and touch bar panic bolt with vertical Pullman latches	872 to 1200mm	SIL or SSE (plated)

• Please confirm required finish when ordering

Non-rebated double doors – electronic latch retraction

Modular electronic latch retraction solutions to suit non-rebated double doorsets

Four point locking

Door width (min - max)
692mm - 900mm

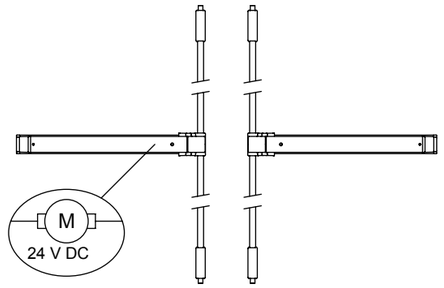

TB452 + 402

Four point locking

Door width (min - max)
872mm - 1200mm

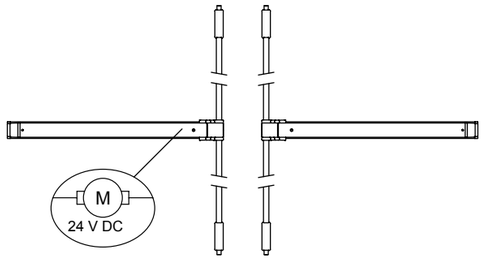

TB453 + 403

* Keep - see panic hardware accessories for more details

How to order

Product code	Description	Door width	Finish
TB452 + 402	ELR with 2 vertical latches and touch bar panic bolt with vertical Pullman latches	692 to 900mm	SIL or SSE (plated)
TB453 + 403	ELR with 2 vertical latches and touch bar panic bolt with vertical Pullman latches	872 to 1200mm	SIL or SSE (plated)

• Please confirm required finish when ordering

High security panic and emergency hardware

The 700 series heavy duty high security system combines the requirements of safety and security with the functions of a panic and emergency exit device. Developed to meet the demands required against a physical attack without compromising safety, this range benefits from heavy duty materials, robust design and excellent production specification.

As well as complying with EN 1125 or EN 179 where relevant the 700 series has been successfully tested, as part of a doorset, to the demanding rigors of LPS 1175 levels 2, 3, 4, 5 and 6 (intruder resistance test). This is in addition to complying with Sold Secure Silver Standard. Both performance assessments demonstrate the range's suitability for projects where security is a key consideration.

The units are surface mounted and proven to withstand severe manual attack with both hand tools and powered drills. With panic push bars and emergency handle release, this range has options for inward opening doors as well as outward opening final exit doors thus offering solutions for all possible applications.

Range benefits

- British manufactured
- UKCA / CE marked for safety, where applicable
- 1, 2, 3, 4 or 5 point locking
- Shoot bolts with 30mm throw used across the range
- Push bars and shoot bolt rods can be easily cut to size on site, giving a perfect fit on each door
- Lever handle emergency units can be used on inward or outward opening doors
- Suitable for use on timber and steel doors
- Available in a range of powder coat finishes or manufactured from solid stainless steel for enhanced performance

ASSA ABLOY
Opening Solutions

701B/30 push bar with 1 point locking

Exidor high security one point locking panic push bar with central shoot bolt.

Features and benefits

- One point locking from a central shoot bolt
- Push bar design easily cut to size to suit different door widths
- Solid stainless steel option available
- Upper rod is a bolt release mechanism to control the central bolt
- Microswitch option available
- Supplied with timber or steel door keeps and fixings, alternative keeps also available
- Range of outside access devices
- Ideal for warehouse or commercial property, where greater intruder resistance is required

Classification code

3	7	6	B	1	3	2	1	A	A
(3)	(6-7)	(5-7)	(0/A/B)	(1)	(3-4)	(2)	(1-2)	(A/B)	(A-C)

EN 1125 :2008

Testing and certification

UKCA / CE marked	Yes
Certified in compliance with	EN 1125
Suitable for fire doors	Timber FD30/FD60, metal FD120/FD240
Certifire approval	Yes
Guarantee	10 years

Specification

Unit type	Panic unit
Activation	Push bar
Door type	Single doorset. Rebated double doorset - active leaf
Door opening	Outward
Projection	133mm from door face
Mounting method	Surface mounted bar
No. of locking points	1
Bolt style	Central shoot bolt
Durability	200,000 cycles
Max door width	1220mm, bar can be cut to size on site
Max door height	2440mm
Max door mass	Up to 200kg
Operation	Pushing the bar down into door face retracts the shoot bolt. The upper rod mechanism keeps the bolt retracted until automatically released on closing of the door
Handing	Left or right
Finish	AGR or SSS (other finishes on request)
Accessories	See panic hardware accessory section for alternative keeps and 705 locking box for additional security

Dimensions

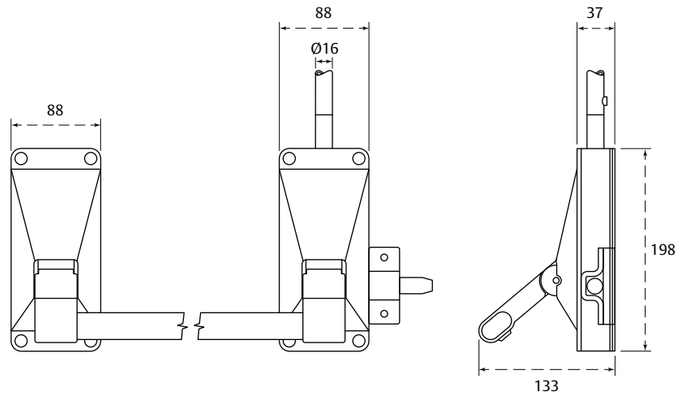

How to order

Order code	Description	Handing	Door type	Finish
701B/30T/LH	Push bar panic unit with 1 point latch bolt	Left	Timber	AGR or SSS (solid)
701B/30S/LH	Push bar panic unit with 1 point latch bolt	Left	Steel	AGR or SSS (solid)
701B/30T/RH	Push bar panic unit with 1 point latch bolt	Right	Timber	AGR or SSS (solid)
701B/30S/RH	Push bar panic unit with 1 point latch bolt	Right	Steel	AGR or SSS (solid)

Additional options:

- Indicate required finish when ordering
- Suffix order code with "MS" for microswitch

ASSA ABLOY
Opening Solutions

702B/30 push bar with 2 point locking

Exidor high security two point locking panic push bar with shoot bolts.

Features and benefits

- Two point locking from adjustable shoot bolts
- Push bar design easily cut to size to suit different door widths
- Non-handed
- Solid stainless steel option available
- Microswitch option available
- Supplied with timber or steel door keeps and fixings, alternative keeps also available
- Range of outside access devices
- Ideal for government and military buildings, where greater intruder resistance is required

Classification code

3	7	6	B	1	3	2	1	A	A
(3)	(6-7)	(5-7)	(0/A/B)	(1)	(3-4)	(2)	(1-2)	(A/B)	(A-C)

EN 1125 :2008

Testing and certification

UKCA / CE marked	Yes
Certified in compliance with	EN 1125
Suitable for fire doors	Timber FD30/FD60, metal FD120/FD240
Certifire approval	Yes
Guarantee	10 years

Specification

Unit type	Panic unit
Activation	Push bar
Door type	Single doorset. Rebated double doorset - inactive leaf. Plain meeting stile double doorset - either leaf
Door opening	Outward
Projection	133mm from door face
Mounting method	Surface mounted bar
No. of locking points	2
Bolt style	Adjustable shoot bolts
Durability	200,000 cycles
Max door width	1220mm, bar can be cut to size on site
Max door height	2440mm
Max door mass	Up to 200kg
Operation	Pushing the bar down into door face retracts the bolts. The bolts remain retracted until automatically released on closing of the door
Handing	Universal
Finish	AGR or SSS (other finishes on request)
Accessories	See panic hardware accessory section for alternative keeps and 705 locking box for additional security

Dimensions

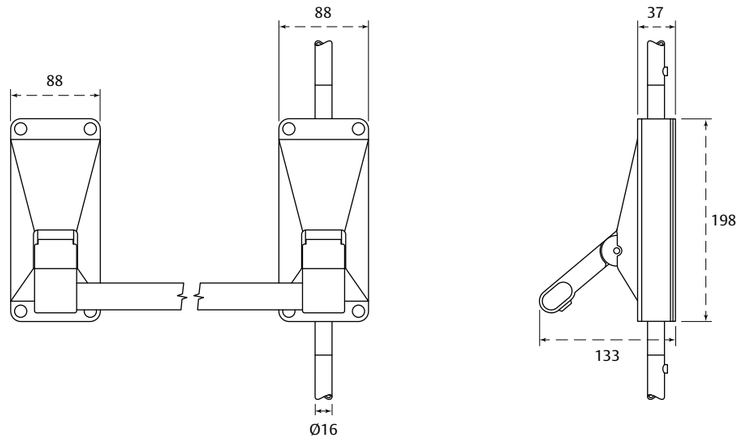

How to order

Order code	Description	Door type	Finish
702B/30T	Push bar panic unit with 2 point shoot bolt	Timber	AGR or SSS (solid)
702B/30S	Push bar panic unit with 2 point shoot bolt	Steel	AGR or SSS (solid)

Additional options:

- Indicate required finish when ordering
- Suffix order code with "MS" for microswitch

ASSA ABLOY
Opening Solutions

703B/30 push bar with 3 point locking

Exidor high security three point locking panic push bar with shoot bolts.

Features and benefits

- Three point locking with adjustable top/bottom shoot bolts and central shoot bolt
- Tested and approved to LPS 1175
- Push bar design easily cut to size to suit different door widths
- Non-handed
- Solid stainless steel option available
- Microswitch option available
- Supplied with timber or steel door keeps and fixings, alternative keeps also available
- Range of outside access devices
- Ideal for utilities and data centers, where greater intruder resistance is required

Classification code

3	7	6	B	1	3	2	1	A	A
(3)	(6-7)	(5-7)	(0/A/B)	(1)	(3-4)	(2)	(1-2)	(A/B)	(A-C)

EN 1125 :2008

Testing and certification

UKCA / CE marked	Yes
Certified in compliance with	EN 1125
Suitable for fire doors	Timber FD30/FD60, metal FD120/FD240
Certifire approval	Yes
Guarantee	10 years

Specification

Unit type	Panic unit
Activation	Push bar
Door type	Single doorset
Door opening	Outward
Projection	133mm from door face
Mounting method	Surface mounted bar
No. of locking points	3
Bolt style	Adjustable shoot bolts and central shoot bolt
Durability	200,000 cycles
Max door width	1220mm, bar can be cut to size on site
Max door height	2440mm
Max door mass	Up to 200kg
Operation	Pushing the bar down into door face retracts the bolts. The bolts remain retracted until automatically released on closing of the door
Handing	Universal
Finish	AGR or SSS (other finishes on request)
Accessories	See panic hardware accessory section for alternative keeps and 705 locking box for additional security

Dimensions

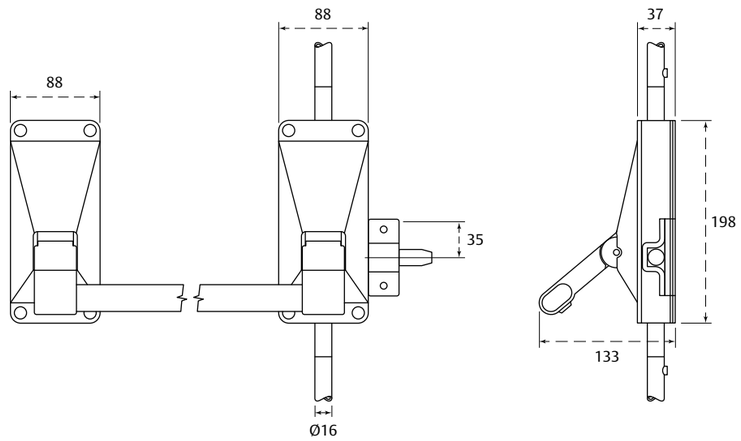

How to order

Order code	Description	Door type	Finish
703B/30T	Push bar panic unit with 3 point shoot bolt	Timber	AGR or SSS (solid)
703B/30S	Push bar panic unit with 3 point shoot bolt	Steel	AGR or SSS (solid)

Additional options:

- Indicate required finish when ordering
- Suffix order code with "MS" for microswitch

ASSA ABLOY
Opening Solutions

704B/30 push bar with 4 point locking

Exidor high security four point locking panic push bar with shoot bolts.

Features and benefits

- Four point locking on single door with locking points on all 4 edges of the door
- Tested and approved to LPS 1175
- Push bar design easily cut to size to suit different door widths
- Solid stainless steel option available
- Microswitch option available
- Supplied with timber or steel door keeps and fixings, alternative keeps also available
- Non-handed
- Range of outside access devices
- Ideal for warehouse or commercial property, where greater intruder resistance is required

Classification code

3	7	6	B	1	3	2	1	A	A
(3)	(6-7)	(5-7)	(0/A/B)	(1)	(3-4)	(2)	(1-2)	(A/B)	(A-C)

EN 1125 :2008

Testing and certification

UKCA / CE marked	Yes
Certified in compliance with	EN 1125
Suitable for fire doors	Timber FD30/FD60, metal FD120/FD240
Certifire approval	Yes
Guarantee	10 years

Specification

Unit type	Panic unit
Activation	Push bar
Door type	Single doorset
Door opening	Outward
Projection	133mm from door face
Mounting method	Surface mounted bar
No. of locking points	4
Bolt style	Adjustable shoot bolts and central shoot bolt
Durability	200,000 cycles
Max door width	1220mm, bar can be cut to size on site
Max door height	2440mm
Max door mass	Up to 200kg
Operation	Pushing the bar down into door face retracts the bolts. The bolts remain retracted until automatically released on closing of the door
Handing	Universal
Finish	AGR or SSS (other finishes on request)
Accessories	See panic hardware accessory section for alternative keeps and 705 locking box for additional security

Dimensions

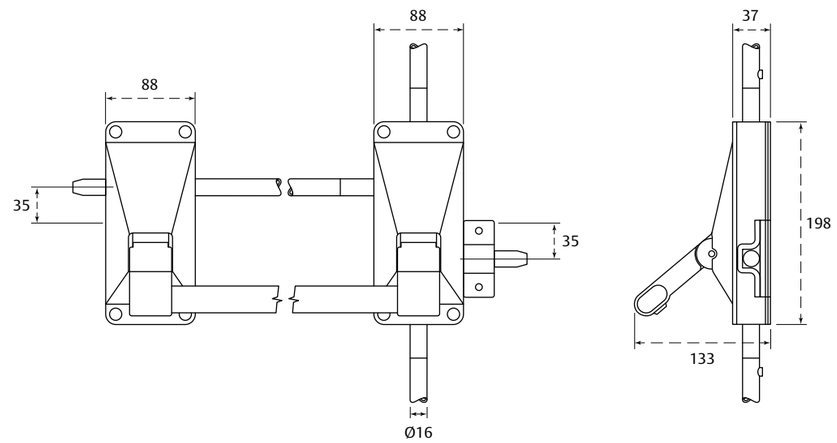

How to order

Order code	Description	Door type	Finish
704B/30T	Push bar panic unit with 4 point shoot bolt	Timber	AGR or SSS (solid)
704B/30S	Push bar panic unit with 4 point shoot bolt	Steel	AGR or SSS (solid)

Additional options:

- Indicate required finish when ordering
- Suffix order code with "MS" for microswitch

ASSA ABLOY
Opening Solutions

701-BD/30 push bar for rebated double door system

Exidor high security three point locking panic push bar set for rebated double doors.

Features and benefits

- Combines 701B/30 and 702B/30 into a single set suitable for rebated double doors
- Push bar design easily cut to size to suit different door widths
- Solid stainless steel option available
- Microswitch option available
- Supplied with timber or steel door keeps and fixings, alternative keeps also available
- Range of outside access devices
- Ideal for large capacity public venues such as sports arenas, where greater intruder resistance must balance the need for high traffic evacuation

Classification code

3	7	6	B	1	3	2	1	A	A
(3)	(6-7)	(5-7)	(0/A/B)	(1)	(3-4)	(2)	(1-2)	(A/B)	(A-C)

EN 1125 :2008

Testing and certification

UKCA / CE marked	Yes
Certified in compliance with	EN 1125
Suitable for fire doors	Timber FD30/FD60, metal FD120/FD240
Certifire approval	Yes
Guarantee	10 years

Specification

Unit type	Panic unit
Activation	Push bar
Door type	Rebated double doorset – central shoot bolt unit on active leaf, bolt unit on inactive leaf
Door opening	Outward
Projection	133mm from door face
Mounting method	Surface mounted bar
No. of locking points	3
Bolt style	Adjustable top/bottom shoot bolts and central shoot bolt
Durability	200,000 cycles
Max door width	1220mm, bar can be cut to size on site
Max door height	2440mm
Max door mass	Up to 200kg
Operation	Pushing the bar down into door face retracts the bolts. The bolts remain retracted until automatically released on closing of the door
Handing	Left or right
Finish	AGR or SSS (other finishes on request)
Accessories	See panic hardware accessory section for alternative keeps and 705 locking box for additional security

Dimensions

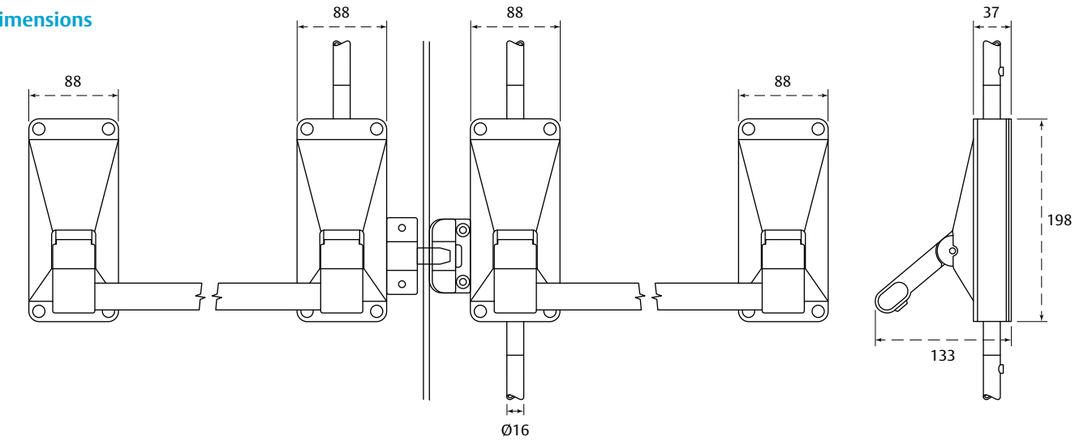

How to order

Order code	Description	Handing	Door type	Finish
701BD/30T/LH	Rebated double door push bar panic unit	Left	Timber	AGR or SSS (solid)
701BD/30S/LH	Rebated double door push bar panic unit	Left	Steel	AGR or SSS (solid)
701BD/30T/RH	Rebated double door push bar panic unit	Right	Timber	AGR or SSS (solid)
701BD/30S/RH	Rebated double door push bar panic unit	Right	Steel	AGR or SSS (solid)

Additional options:

- Indicate required finish when ordering
- Suffix order code with "MS" for microswitch

ASSA ABLOY
Opening Solutions

742-BD/30 push bar rebated double door set

Exidor high security four point locking panic push bar set for rebated double doors.

Features and benefits

- Combines a unit with 2 horizontal shoot bolts and 702B/30 into a single set suitable for rebated double doors
- Push bar design easily cut to size to suit different door widths
- Solid stainless steel option available
- Microswitch option available
- Supplied with timber or steel door keeps and fixings
- Keeps available for alternative frame arrangements
- Range of outside access devices
- Ideal for large capacity public venues such as concert or exhibition halls, where greater intruder resistance must balance the need for high traffic evacuation

Classification code

3	7	6	B	1	3	2	1	A	A
(3)	(6-7)	(5-7)	(0/A/B)	(1)	(3-4)	(2)	(1-2)	(A/B)	(A-C)

EN 1125 :2008

Testing and certification

UKCA / CE marked	Yes
Certified in compliance with	EN 1125
Suitable for fire doors	Timber FD30/FD60, metal FD120/FD240
Certifire approval	No
Guarantee	10 years

Specification

Unit type	Panic unit
Activation	Push bar
Door type	Rebated double doorset – 2 horizontal shoot bolt unit on active leaf, bolt unit on inactive leaf
Door opening	Outward
Projection	133mm from door face
Mounting method	Surface mounted bar
No. of locking points	4
Bolt style	Horizontal shoot bolts and adjustable top/bottom shoot bolts
Durability	200,000 cycles
Max door width	1220mm, bar can be cut to size on site
Max door height	2440mm
Max door mass	Up to 200kg
Operation	Pushing the bar down into door face retracts the bolts. The bolts remain retracted until automatically released on closing of the door
Handing	Universal
Finish	AGR or SSS (other finishes on request)
Accessories	See panic hardware accessory section for alternative keeps and 705 locking box for additional security

Dimensions

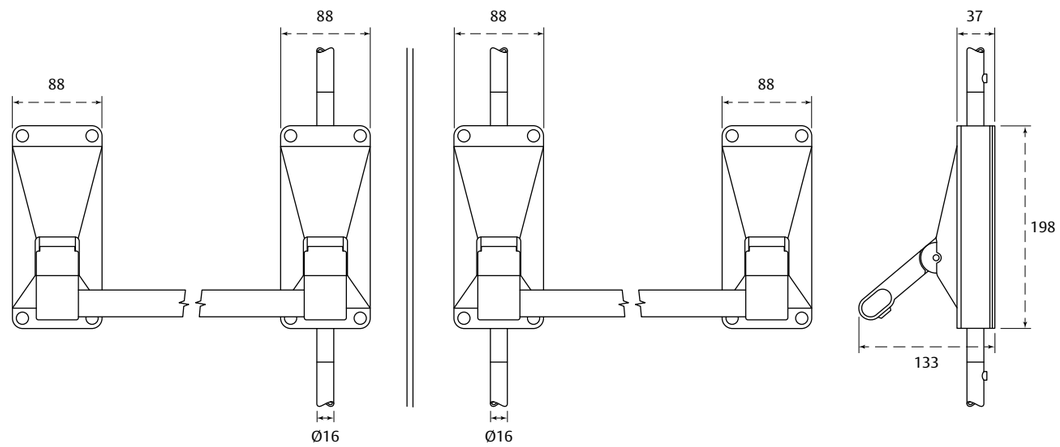

How to order

Order code	Description	Door type	Finish
742BD/30T	Rebated double door push bar panic unit with 4 point shoot bolt	Timber	AGR or SSS (solid)
742BD/30S	Rebated double door push bar panic unit with 4 point shoot bolt	Steel	AGR or SSS (solid)

Additional options:

- Indicate required finish when ordering
- Suffix order code with "MS" for microswitch

743-BD/30 push bar rebated double door set

Exidor high security five point locking panic push bar set for rebated double doors.

Features and benefits

- Combines a unit with 3 horizontal shoot bolts and 702B/30 into a single set suitable for rebated double doors
- Tested and approved to LPS 1175
- Push bar design easily cut to size to suit different door widths
- Solid stainless steel option available
- Microswitch option available
- Supplied with timber or steel door keeps and fixings, alternative keeps also available
- Range of outside access devices
- Ideal for large capacity venues such as factories, where greater intruder resistance must balance the need for high traffic evacuation

Classification code

3 (3) | 7 (6-7) | 6 (5-7) | B (0/A/B) | 1 (1) | 3 (3-4) | 2 (2) | 1 (1-2) | A (A/B) | A (A-C)

EN 1125 :2008

Testing and certification

UKCA / CE marked	Yes
Certified in compliance with	EN 1125
Suitable for fire doors	Timber FD30/FD60, metal FD120/FD240
Certifire approval	No
Guarantee	10 years

Specification

Unit type	Panic unit
Activation	Push bar
Door type	Rebated double doorset – 3 horizontal shoot bolt unit on active leaf, bolt unit on inactive leaf
Door opening	Outward
Projection	133mm from door face
Mounting method	Surface mounted bar
No. of locking points	5
Bolt style	Horizontal shoot bolts and adjustable top/bottom shoot bolts
Durability	200,000 cycles
Max door width	1220mm, bar can be cut to size on site
Max door height	2440mm
Max door mass	Up to 200kg
Operation	Pushing the bar down into door face retracts the bolts. The bolts remain retracted until automatically released on closing of the door
Handing	Universal
Finish	AGR or SSS (other finishes on request)
Accessories	See panic hardware accessory section for alternative keeps and 705 locking box for additional security

Dimensions

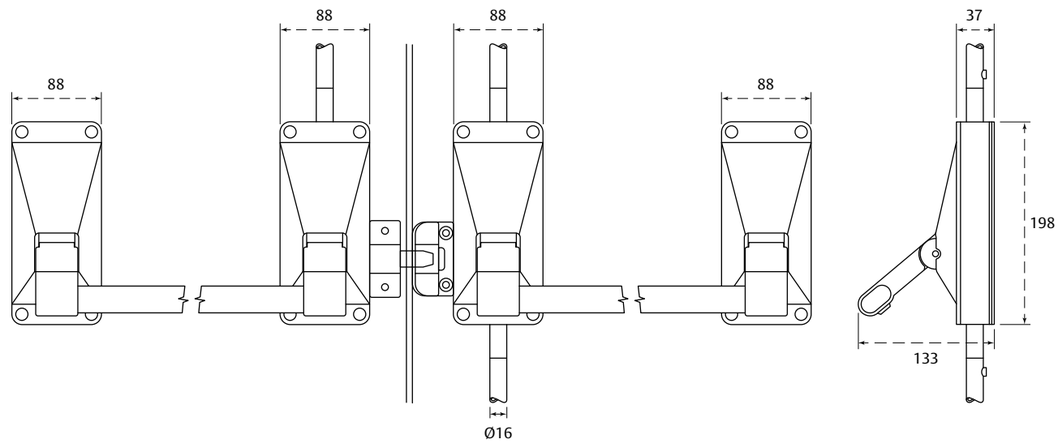

How to order

Order code	Description	Door type	Finish
743BD/30T	Rebated double door push bar panic unit with 5 point shoot bolt	Timber	AGR or SSS (solid)
743BD/30S	Rebated double door push bar panic unit with 5 point shoot bolt	Steel	AGR or SSS (solid)

Additional options:

- Indicate required finish when ordering
- Suffix order code with "MS" for microswitch

702L/30 and 732L/30 lever unit with 2 point locking

Exidor high security two point locking lever operated emergency unit with shoot bolts.

Features and benefits

- Two point locking with vertical shoot bolts
- Suitable for inward or outward opening doors, depending on the model
- Non-handed
- Solid stainless steel option available
- Supplied with timber or steel door keeps and fixings
- Keeps available for alternative frame arrangements
- Range of outside access devices
- Ideal for limited access warehouse or commercial property, where greater intruder resistance is required

Classification code 702L/30

3 (3) | 7 (6-7) | 6 (5-7) | B (0/A/B) | 1 (1) | 3 (3-4) | 5 (2-5) | 1 (1-2) | A (A/B) | A (A-D)

Classification code 732L/30

3 (3) | 7 (6-7) | 6 (5-7) | B (0/A/B) | 1 (1) | 3 (3-4) | 5 (2-5) | 1 (1-2) | A (A/B) | D (A-D)

EN 179 :2008

Testing and certification

UKCA / CE marked	Yes
Certified in compliance with	EN 179
Suitable for fire doors	Timber FD30/FD60, metal FD120/FD240
Certifire approval	Yes
Guarantee	10 years

Specification

Unit type	Emergency unit
Activation	Lever handle
Door type	Single doorset. Rebated double doorset - inactive leaf. Plain meeting stile double doorset - either leaf
Door opening	702L/30 – Outward , 732L/30 – Inward
Projection	123mm from door face
Mounting method	Surface mounted lever unit
No. of locking points	2
Bolt style	Adjustable shoot bolts
Durability	200,000 cycles
Max door width	1220mm
Max door height	2440mm
Max door mass	Up to 200kg
Operation	Pushing the lever handle down to the floor retracts the bolts. The bolts remain retracted until automatically released on closing of the door
Handing	Universal
Finish	AGR or SSS (other finishes on request)
Accessories	See panic hardware accessory section for alternative keeps and 705 locking box for additional security

Dimensions

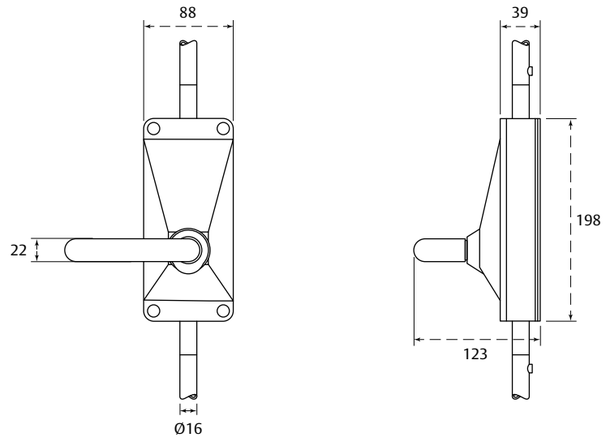

How to order

Order code	Description	Door Opening	Door type	Finish
702L/30T	Lever operated emergency unit with 2 point shoot bolt	Outward opening	Timber	AGR or SSS (solid)
702L/30S	Lever operated emergency unit with 2 point shoot bolt	Outward opening	Steel	AGR or SSS (solid)
732L/30T	Lever operated emergency unit with 2 point shoot bolt	Inward opening	Timber	AGR or SSS (solid)
732L/30S	Lever operated emergency unit with 2 point shoot bolt	Inward opening	Steel	AGR or SSS (solid)

• Indicate required finish when ordering

703L/30 and 733L/30 lever unit with 3 point locking

Exidor high security three point locking lever operated emergency unit with shoot bolts.

Features and benefits

- Three point locking with vertical and central shoot bolts
- Tested and approved to LPS 1175
- Suitable for inward or outward opening doors, depending on the model
- Solid stainless steel option available
- Supplied with timber or steel door keeps and fixings
- Keeps available for alternative frame arrangements
- Range of outside access devices
- Ideal for limited access areas in secure buildings such as banks, where greater intruder resistance is required

Classification code 703L/30

3	7	6	B	1	3	5	1	A	A
(3)	(6-7)	(5-7)	(0/A/B)	(1)	(3-4)	(2-5)	(1-2)	(A/B)	(A-D)

Classification code 733L/30

3	7	6	B	1	3	5	1	A	D
(3)	(6-7)	(5-7)	(0/A/B)	(1)	(3-4)	(2-5)	(1-2)	(A/B)	(A-D)

EN 179 :2008

UK CA CE 10 YEAR GUARANTEE LPS 1175 certifire MADE IN BRITAIN

Testing and certification

UKCA / CE marked	Yes
Certified in compliance with	EN 179
Suitable for fire doors	Timber FD30/FD60, metal FD120/FD240
Certifire approval	Yes
Guarantee	10 years

Specification

Unit type	Emergency unit
Activation	Lever handle
Door type	Single doorset
Door opening	703L/30 – Outward, 733L/30 – Inward
Projection	123mm from door face
Mounting method	Surface mounted lever unit
No. of locking points	3
Bolt style	Central latch bolt and adjustable top/bottom shoot bolts
Durability	200,000 cycles
Max door width	1220mm
Max door height	2440mm
Max door mass	Up to 200kg
Operation	Pushing the lever handle down to the floor retracts the bolts. The bolts remain retracted until automatically released on closing of the door
Handing	Universal
Finish	AGR or SSS (other finishes on request)
Accessories	See panic hardware accessory section for alternative keeps and 705 locking box for additional security

Dimensions

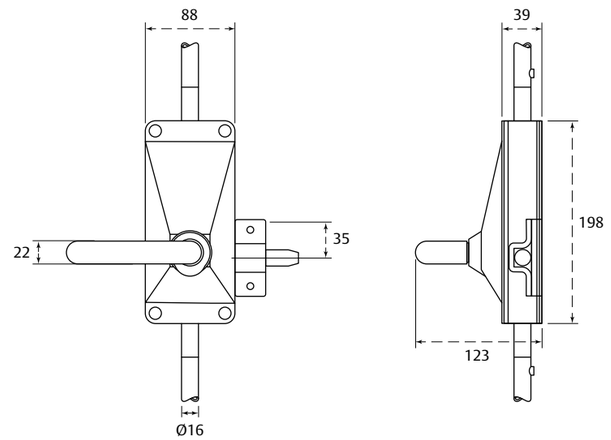

How to order

Order code	Description	Door Opening	Door type	Finish
703L/30T	Lever operated emergency unit with 3 point shoot bolt	Outward opening	Timber	AGR or SSS (solid)
703L/30S	Lever operated emergency unit with 3 point shoot bolt	Outward opening	Steel	AGR or SSS (solid)
733L/30T	Lever operated emergency unit with 3 point shoot bolt	Inward opening	Timber	AGR or SSS (solid)
733L/30S	Lever operated emergency unit with 3 point shoot bolt	Inward opening	Steel	AGR or SSS (solid)

• Indicate required finish when ordering

ASSA ABLOY
Opening Solutions

704L/30 lever unit with 4 point locking

Exidor high security four point locking lever operated emergency unit with shoot bolts.

Features and benefits

- Four point locking on single door with locking points on all 4 edges of the door
- Tested and approved to LPS 1175
- Solid stainless steel option available
- Supplied with timber or steel door keeps and fixings
- Keeps available for alternative frame arrangements
- Range of outside access devices
- Ideal for restricted access areas within sport and concert venues, where greater intruder resistance is required

Classification code 704L/30

3	7	6	B	1	3	5	1	A	D
(3)	(6-7)	(5-7)	(0/A/B)	(1)	(3-4)	(2-5)	(1-2)	(A/B)	(A-D)

EN 179 :2008

Testing and certification

UKCA / CE marked	Yes
Certified in compliance with	EN 179
Suitable for fire doors	Timber FD30/FD60, metal FD120/FD240
Certifire approval	Yes
Guarantee	10 years

Specification

Unit type	Emergency unit
Activation	Lever handle
Door type	Single doorset. Double doorset - both leaves
Door opening	Outward
Projection	123mm from door face
Mounting method	Surface mounted lever unit
No. of locking points	4
Bolt style	Central shoot bolt and adjustable top/bottom shoot bolts
Durability	200,000 cycles
Max door width	1220mm
Max door height	2440mm
Max door mass	Up to 200kg
Operation	Pushing the lever handle down to the floor retracts the bolts. The bolts remain retracted until automatically released on closing of the door
Handing	Universal
Finish	AGR or SSS (other finishes on request)
Accessories	See panic hardware accessory section for alternative keeps and 705 locking box for additional security

Dimensions

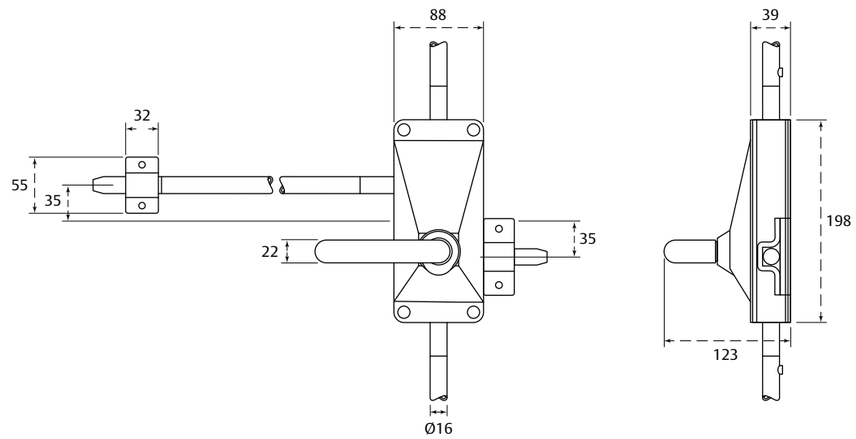

How to order

Order code	Description	Door type	Finish
704L/30T	Lever operated emergency unit with 4 point shoot bolt	Timber	AGR or SSS (solid)
704L/30S	Lever operated emergency unit with 4 point shoot bolt	Steel	AGR or SSS (solid)

• Indicate required finish when ordering

705 locking box

Exidor 700 series hardware accessory that will deadlock any of the range, preventing access from outside and escape from inside.

Features and benefits

- Used with selected 700 series exit hardware during doorset testing to LPS security standard level 6
- Provides additional security to empty or un-used premises as it locks off the shoot bolt movement
- Fitting 705 does not impact CE accreditation until locked
- A surface mounted accessory for installation with hardware fitted to timber or steel doors
- The unit includes anti-drill and anti-force plates to withstand attack
- Available with or without Euro profile cylinder
- Supplied with back plate for ease of installation

Testing and certification

UKCA / CE marked	N/A Fitted as an accessory – when locked it will invalidate CE Mark on 700 series
Certified in compliance with	N/A
Suitable for fire doors	N/A
Certifire approval	N/A
Guarantee	10 years

Specification

Unit type	Accessory
Activation	Euro profile cylinder key/turn
Door type	Single doorset / Double doorset both leaves
Door opening	Outward or inward, depending on 700 series hardware fitted to
Projection	49mm from door face
Mounting method	Surface mounted around shoot bolt
Max door width	1220mm
Max door height	2440mm
Max door mass	Up to 200kg
Operation	Locking the cylinder deadlocks the 700 series bolts so they cannot be opened by depressing the lever or the bar. Unlocking the cylinder frees the mechanism, making escape possible. An indicator panel signals locked or unlocked status
Handing	Left or right
Finish	AGR (other finishes on request)
Suitable for use with	702B/30, 703B/30, 704B/30, 701BD/30, 742BD/30, 743BD/30, 702L/30, 732L/30, 703L/30, 733L/30, 704L/30
Accessories	N/A

Dimensions

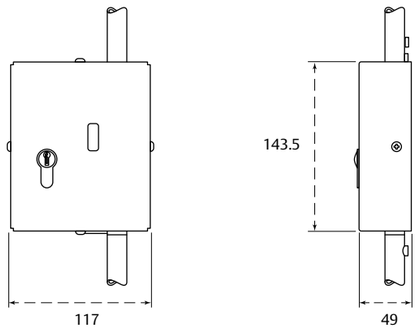

How to order

Order code	Description	Handing	Door type	Finish
705EC/LH	Locking box with 40mm Euro profile half cylinder	Left	Timber or steel	AGR
705EC/RH	Locking box with 40mm Euro profile half cylinder	Right	Timber or steel	AGR
705EA/LH	Locking box with 40mm Euro profile half cylinder aperture	Left	Timber or steel	AGR
705EA/RH	Locking box with 40mm Euro profile half cylinder aperture	Right	Timber or steel	AGR
705TC/LH	Locking box, security escutcheon with offset Euro profile double cylinder	Left	Timber or steel	AGR
705TC/RH	Locking box, security escutcheon with offset Euro profile double cylinder	Right	Timber or steel	AGR
705TA/LH	Locking box, security escutcheon with offset Euro profile double cylinder aperture	Left	Timber or steel	AGR
705TA/RH	Locking box, security escutcheon with offset Euro profile double cylinder aperture	Right	Timber or steel	AGR

- Indicate required finish when ordering

709 knob outside access device

Exidor knob operated outside access device for external opening of an escape door.

Features and benefits

- Manufactured from stainless steel to help prevent force and drill attack
- Incorporates cylinder protection to prevent manipulation
- Compact design of external hardware for use with all 700 series hardware
- Solid stainless steel option available
- Surface mounted using concealed machine screws on the external face of doors up to 45mm thick
- Available with or without Euro cylinder
- Locking the cylinder prevents access into the building but will not prevent escape out of the building
- Suitable for occasionally used additional entry points such as building side entrances

Testing and certification

UKCA / CE marked	As an approved accessory to the internal hardware
Certified in compliance with	Certified 700 series accessory as part of EN 1125 and EN 179
Suitable for fire doors	Timber FD30/FD60, metal FD120/FD240
Certifire approval	Yes – as an accessory to rest of range
Guarantee	10 years

Specification

Unit type	Outside access device
Activation	Knob handle
Door type	Single doorset. Rebated double doorset - active leaf. Plain meeting stile double doorset - either leaf
Door opening	Outward or inward, depending on internal hardware
Projection	78mm from door face
Mounting method	Surface mounted
Max door width	1220mm
Max door height	2440mm
Max door mass	Up to 200kg
Operation	Rotating the knob retracts the internal bolts. Releasing the knob returns the internal bolts to the rest position
Handing	Universal
Cylinder specification for master keying needs	45mm Euro profile cylinder, with side face drill and tap fixing
Finish	AGR or SSS (other finishes on request)
Suitable for use with	701B/30, 702B/30, 703B/30, 704B/30, 701BD/30, 702BD/30, 742BD/30, 743BD/30, 702L/30, 732L/30, 703L/30, 733L/30, 704L/30
Accessories	Additional fixings for thicker doors available on request

Dimensions

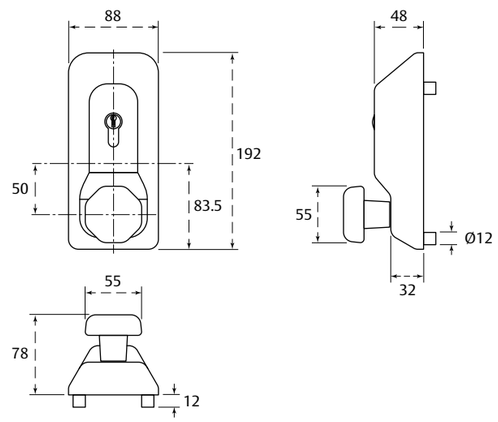

How to order

Order code	Description	Finish
709EA	Knob OAD without cylinder	AGR or SSS (solid)
709EC	Knob OAD with cylinder	AGR or SSS (solid)

• Indicate required finish when ordering

710 lever outside access device

Exidor easy and convenient lever operated outside access device for external opening of an escape door.

Features and benefits

- Tested to LPS 1175 SR2 grade
- Manufactured from stainless steel to help prevent force and drill attack
- Incorporates cylinder protection to prevent manipulation
- Lever design helps meet requirements of BS 8300 and Approved Document M, giving barrier free access
- Solid stainless steel option available
- Surface mounted using concealed machine screws on the external face of doors up to 45mm thick
- Available with or without Euro cylinder
- Locking the cylinder prevents access into the building but will not prevent escape out of the building
- Suitable for busy additional entry points such as car park or smoking area access doors

Testing and certification

UKCA / CE marked	As an approved accessory to the internal hardware
Certified in compliance with	Certified 700 series accessory as part of EN 1125 and EN 179
Suitable for fire doors	Timber FD30/FD60, metal FD120/FD240
Certifire approval	Yes – as an accessory to rest of range
Guarantee	10 years

Specification

Unit type	Outside access device
Activation	Lever handle
Door type	Single doorset. Rebated double doorset - active leaf. Plain meeting stile double doorset - either leaf
Door opening	Outward or inward, depending on internal hardware
Projection	89mm from door face
Mounting method	Surface mounted
Max door width	1220mm
Max door height	2440mm
Max door mass	Up to 200kg
Operation	Pushing the lever down retracts the internal bolts. Releasing the lever returns the internal bolts to the rest position
Handing	Universal
Cylinder specification for master keying needs	45mm Euro profile cylinder, with side face drill and tap fixing
Finish	AGR or SSS (other finishes on request)
Suitable for use with	701B/30, 702B/30, 703B/30, 704B/30, 701BD/30, 702BD/30, 742BD/30, 743BD/30, 702L/30, 732L/30, 703L/30, 733L/30, 704L/30
Accessories	Additional fixings for thicker doors available on request

Dimensions

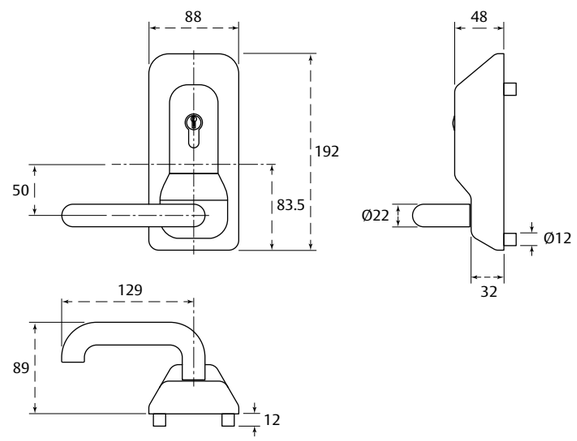

How to order

Order code	Description	Finish
710EA	Lever OAD without cylinder	AGR or SSS (solid)
710EC	Lever OAD with cylinder	AGR or SSS (solid)

• Indicate required finish when ordering

715 high security lever outside access device

Exidor high security lever operated outside access device for external opening of an escape door.

Features and benefits

- Tested to LPS 1175 SR4 grade
- Principle attack areas protected with high security features
- Manufactured from stainless steel to help prevent force and drill attack
- Lever design helps meet requirements of BS 8300 and Approved Document M, giving barrier free access
- Solid stainless steel option available
- Surface mounted using concealed machine screws on the external face of doors up to 69mm thick
- Available with or without Euro cylinder
- Locking the cylinder prevents access into the building but will not prevent escape out of the building
- Suitable for additional entry points such as car park or smoking area access doors

Testing and certification

UKCA / CE marked	As an approved accessory to the internal hardware
Certified in compliance with	Certified 700 series accessory as part of EN 1125 and EN 179
Suitable for fire doors	No
Certifire approval	No
Guarantee	10 years

Specification

Unit type	Outside access device
Activation	Lever handle
Door type	Single doorset. Rebated double doorset - active leaf. Plain meeting stile double doorset - either leaf
Door opening	Outward or inward, depending on internal hardware
Projection	95mm from door face
Mounting method	Surface mounted
Max door width	1220mm
Max door height	2440mm
Max door mass	Up to 200kg
Operation	Pushing the lever down retracts the internal bolts/latches. Releasing the lever returns the internal bolts/latches to the rest position
Handing	Universal
Cylinder specification for master keying needs	45mm Euro profile cylinder, with side face drill and tap fixing
Finish	AGR or SSS (other finishes on request)
Suitable for use with	701B/30, 702B/30, 703B/30, 704B/30, 701BD/30, 702BD/30, 742BD/30, 743BD/30, 702L/30, 732L/30, 703L/30, 733L/30, 704L/30
Accessories	Additional fixings for thicker doors available on request

Dimensions

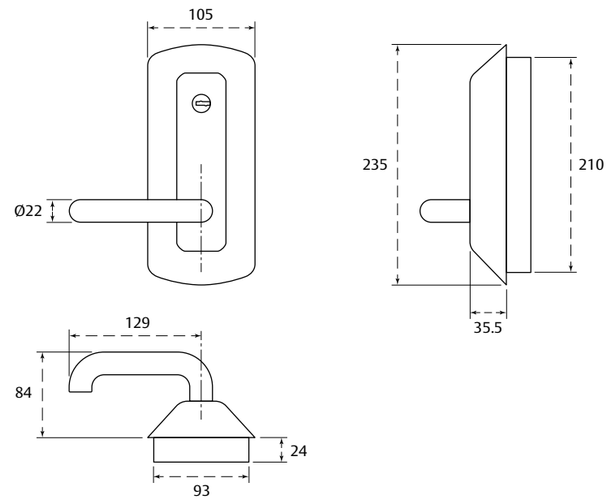

How to order

Order code	Description	Finish
715EA	Lever OAD without cylinder	AGR or SSS (solid)
715EC	Lever OAD with cylinder	AGR or SSS (solid)

Additional options:

- Indicate required finish when ordering
- Suffix order code with "RK" for key retention

Paddle handle emergency hardware for use on aluminium doorsets

Our range of emergency exit paddle handles for use with mortice locks or concealed vertical rods are ideal for use on aluminium doors in applications where people are familiar with the building layout and hardware.

Developed to work with some of our most popular narrow profile mortice lockcases, the range offers solutions that are either Euro or round cylinder driven so can be suited with other hardware on site to give a consistent appearance and standardised door preparation. The concealed vertical rod system gives doors a simple and aesthetically pleasing appearance as locking points are hidden within the door structure during door manufacture.

Using a paddle handle allows the release to be from either push or pull action of the paddle handle making the range ideal for internal escape doors such as those onto a stairwell which are likely to be inward opening and so require a pull action.

Our expertise in aluminium doorset hardware combined with critical EN 179 testing ensures that the paddle handle range is ideal for use in restricted access areas of retail buildings and other commercial applications where aluminium doorsets are popular.

Range benefits

- UKCA / CE marked for safety
- Designed for use on aluminium doors
- Utilises our narrow profile mortice lockcases or concealed shoot bolts for 2 point locking
- Round cylinder or Euro cylinder driven solutions
- Pull or push paddle handles available
- Solutions for most popular door thicknesses

ASSA ABLOY
Opening Solutions

4591 emergency escape paddle handle

Adams Rite aluminium door push/pull paddle handle for use with 4710 round cylinder deadlatch.

Features and benefits

- Handle for use with mortice lock that utilises round screw-in cylinder
- Pull handles available for inward opening doors as well as push paddle handles
- Kit style of ordering – order exact lock and cylinder separately to give tailored solution for each door
- Solutions for a range of door thicknesses
- Ideal for back of house doorsets in retail applications
- Can be used with a cylinder and escutcheon for external key access

Classification code

Push variants

3 (3) | 7 (6-7) | 6 (5-7) | 0 (0/A/B) | 1 (1) | 3 (3-4) | 4 (2-5) | 2 (1-2) | B (A/B) | A (A-D)

Pull variants

3 (3) | 7 (6-7) | 6 (5-7) | 0 (0/A/B) | 1 (1) | 3 (3-4) | 4 (2-5) | 2 (1-2) | B (A/B) | D (A-D)

EN 179 :2008

Testing and certification

UKCA / CE marked	Yes
Certified in compliance with	EN 179
Suitable for fire doors	No
Certifire approval	No
Guarantee	3 years

Specification

Unit type	Emergency unit
Activation	Paddle handle
Door type	Single doorset. Rebated double doorset - active leaf
Door opening	Push - outward. Pull - inward
Projection	75mm from door face
Mounting method	Surface mounted paddle handle with round screw-in cylinder mortice lock (order lock and cylinder separately).
Backset	Various – see 4710 narrow profile lockcase
No. of locking points	1
Bolt style	Deadlocking latch
Cylinder specification	Round screw-in cylinder
Durability	200,000 cycles
Max door width	1200mm
Max door height	2500mm
Max door mass	Up to 200kg
Operation	Pushing/pulling the paddle handle retracts the latch. Releasing the paddle handle returns the latch to the rest position
Handing	Left or right
Finish	SAA
Accessories	Order 4710 deadlatch and cylinder separately

Dimensions

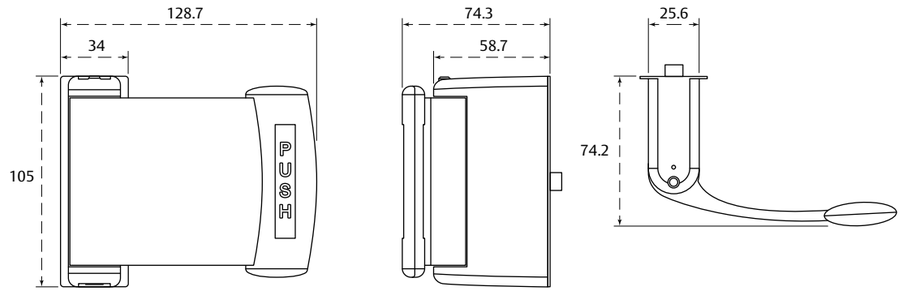

How to order

4591 – XX – XX – 628

Door material
4591 Aluminium

Handing options
01 Pull to left
02 Pull to right
03 Push to left
04 Push to right

Door thickness options
00 Up to 45mm thick
01 46 – 51mm thick
02 52 – 63mm thick
03 67 – 76mm thick
04 80 – 82mm thick

Finish
628 Satin anodised aluminium

ASSA ABLOY
Opening Solutions

4596 Euro profile operation paddle handle

Adams Rite aluminium door push/pull paddle handle for use with 4750 Euro profile deadlatch.

Features and benefits

- Handle for use with mortice lock that utilises round Euro profile cylinder
- Pull handles available for inward opening doors as well as push paddle handles
- Kit style of ordering – order exact lock and cylinder separately to give tailored solution for each door
- Solutions for a range of door thicknesses
- Ideal for internal doors on escape routes as well as final exit doors of leisure and hospitality buildings
- Can be used with a cylinder and escutcheon for external key access

Classification code

Push variants

3	7	6	0	1	3	4	2	B	A
(3)	(6-7)	(5-7)	(0/A/B)	(1)	(3-4)	(2-5)	(1-2)	(A/B)	(A-D)

Pull variants

3	7	6	0	1	3	4	2	B	D
(3)	(6-7)	(5-7)	(0/A/B)	(1)	(3-4)	(2-5)	(1-2)	(A/B)	(A-D)

EN 179 :2008

UK CA CE 3 YEAR GUARANTEE EPD®

Testing and certification

UKCA / CE marked	Yes
Certified in compliance with	EN 179
Suitable for fire doors	No
Certifire approval	No
Guarantee	3 years

Specification

Unit type	Emergency unit
Activation	Paddle handle
Door type	Single doorset. Rebated double doorset - active leaf
Door opening	Push - outward. Pull - inward
Projection	75mm from door face
Mounting method	Surface mounted paddle handle with Euro profile cylinder mortice lock (order lock and cylinder separately)
Backset	Various – see 4750 narrow profile lockcase
No. of locking points	1
Bolt style	Deadlocking latch
Cylinder specification	Euro profile cylinder
Durability	200,000 cycles
Max door width	1200mm
Max door height	2500mm
Max door mass	Up to 200kg
Operation	Pushing/pulling the paddle handle retracts the latch. Releasing the paddle handle returns the latch to the rest position
Handing	Left or right
Finish	SAA
Accessories	Order 4750 deadlatch and cylinder separately

Dimensions

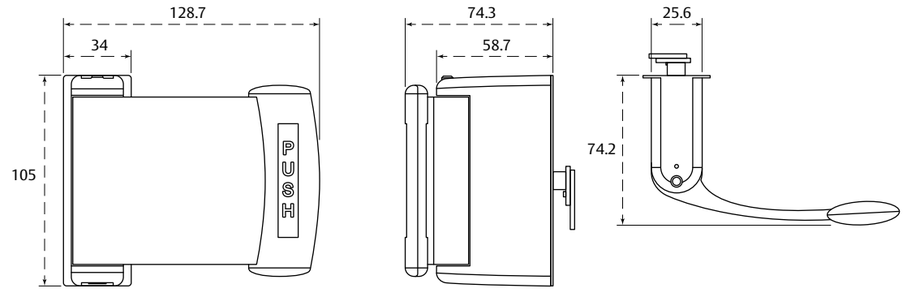

How to order

4596 – XX – XX – 628

Door material
4596 Aluminium

Handing options
01 Pull to left
02 Pull to right
03 Push to left
04 Push to right

Door thickness options
01 46 – 51mm thick
02 52 – 63mm thick
03 67 – 76mm thick

Finish
628 Satin anodised aluminium

4781 paddle handle with concealed vertical rod

Aluminium door push paddle handle with 2 point locking concealed vertical rods.

Features and benefits

- Two point locking provided by shoot bolts concealed within door during manufacture
- All hardware supplied in 1 box for convenience
- Solutions for a range of door thicknesses
- Accepts only standard round screw-in mortice cylinder allowing external key access

Classification code

3	7	6	0	1	3	4	2	B	A
(3)	(6-7)	(5-7)	(0/A/B)	(1)	(3-4)	(2-5)	(1-2)	(A/B)	(A-D)

EN 179 :2008

Testing and certification

UKCA / CE marked	Yes
Certified in compliance with	EN 179
Suitable for fire doors	No
Certifire approval	No
Guarantee	3 years

Specification

Unit type	Emergency unit
Activation	Paddle handle
Door type	Single doorset. Rebated double doorset - inactive leaf. Plain meeting stile double doorset - either leaf
Door opening	Outward
Projection	75mm from door face
Mounting method	Surface mounted paddle handle with concealed rods
Backset	N/A
No. of locking points	2
Bolt style	Shoot bolt
Durability	200,000 cycles
Max door width	1200mm
Max door height	2500mm
Max door mass	Up to 200kg
Operation	Pushing the paddle handle retracts the bolts. The bolts remain retracted until automatically released on closing of the door
Handing	Left or right
Finish	SAA
Accessories	N/A

Dimensions

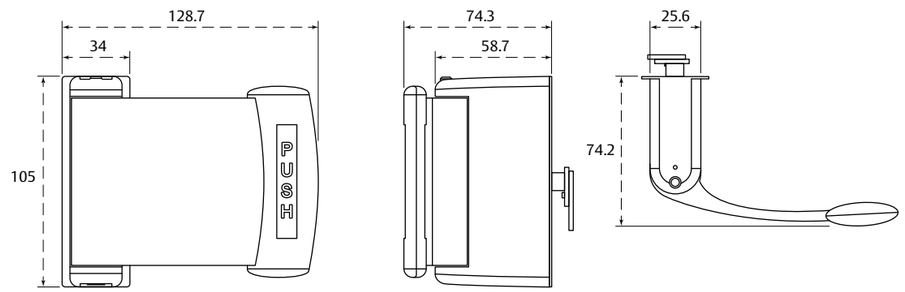

How to order

4781 – XXX – 628 – XXX

Door material
4781 Aluminium

Handing options
021 Push to left
041 Push to right

Finish
628 Satin anodised aluminium

Door thickness options
Blank 44mm thick
947 47mm thick
950 50mm thick
952 52mm thick
954 54mm thick
967 67mm thick

Touch bar panic hardware for use on aluminium doorsets

Specifically designed and developed with aluminium doorset construction in mind, our range of concealed panic hardware is ideal for use on final exit doors in public areas. The touch bar sits flush to the aluminium door skin, preventing accidental or intentional jamming of the mechanism. Furthermore, as locking points are concealed within the door and frame detail, there is additional protection against manipulation.

Concealed panic hardware provides life safety solutions for commercial aluminium door applications, via a mortice lock or concealed vertical rods with shoot bolts.

Combining our aluminium hardware expertise with critical EN 1125 testing makes the concealed touch bar range ideal for use in schools, retail environments and other public access buildings where aluminium doorsets are popular.

Range benefits

- UKCA / CE marked for safety
- Designed for use on aluminium doors
- 1 or 2 point locking
- 5 touch bar widths available to suit different door opening widths
- Solutions for most popular door thicknesses
- Options include monitored and cylinder dogging compromising fire safety

ASSA ABLOY
Opening Solutions

940 series

Adams Rite aluminium door touch bar with mortice deadlocking nightlatch.

Features and benefits

- Mortice lock includes an oil impregnated solid brass deadlocking latchbolt
- Solutions for a range of door widths and thicknesses
- Different faceplate options to suit different door stiles, including flat, beveled and radiused
- Unique lockcase mounting tab system for easier fitting
- Dogging (hold back) via key operation within the touch bar as standard on all versions except 600mm
- Optional monitoring and cylinder dogging
- Accepts only standard round screw-in mortice cylinder allowing external key access

Classification code

3 (3) | 7 (6-7) | 6 (5-7) | 0 (0/A/B) | 1 (1) | 3 (3-4) | 2 (2) | 2 (1-2) | B (A/B) | A (A-C)

EN 1125 :2008

Testing and certification

UKCA / CE marked	Yes
Certified in compliance with	EN 1125
Suitable for fire doors	No
Certifire approval	No
Guarantee	3 years

Specification

Unit type	Panic unit
Activation	Touch bar
Door type	Single doorset. Rebated double doorset - active leaf
Door opening	Outward
Projection	76mm from door face
Mounting method	Surface mounted bar with round screw-in cylinder mortice lock (order cylinder separately, lock supplied with touch bar)
Backset	Available in 24.6mm, 28.6mm and 38.1mm Requires a minimum door stile depth of 16.3mm greater than the backset
No. of locking points	1
Bolt style	Deadlocking latchbolt
Cylinder specification	Round screw-in cylinder
Durability	200,000 cycles
Max door width	Depends on variant, see how to order
Max door height	2500mm
Max door mass	Up to 200kg
Operation	Pressing the touch bar into the door face retracts the latch bolt. Releasing the touch bar returns the latch bolt to the rest position
Handing	Left or right
Finish	SAA
Accessories	N/A

Dimensions

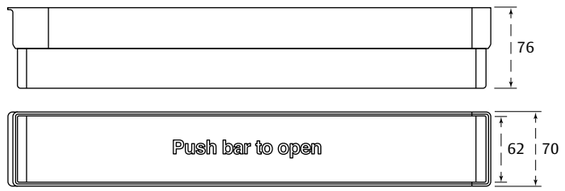

How to order

940 – XX – X – XXX – 628 – XXX

Door material
940 Aluminium

Options
- **00** Standard model
- **01** Cylinder dogging
- **02** Single switch monitoring
- **03** Double switch monitoring

Max door opening width options
- **1** 600mm
- **2** 750mm
- **3** 900mm
- **4** 1050mm
- **5** 1200mm

Handing options
- **7** RHR
- **8** LHR

Faceplate shape options
- **0** Flat (24.6mm backset only)
- **1** Radius (24.6mm backset only)
- **2** Bevelled (24.6mm backset only)
- **4** Radius with weatherstrip (24.6mm backset only)
- **U** Universal (28.6mm and 38.1mm backset only)

Backset options
- **2** 24.6mm (specify faceplate above)
- **3** 28.6mm (comes with universal faceplate pack)
- **4** 38.1mm (comes with universal faceplate pack)

Finish
628 Satin anodised aluminium

Door thickness options
- **Blank** 44mm
- **947** 47mm
- **950** 50mm
- **952** 52mm
- **967** 67mm
- **974** 74mm

ASSA ABLOY
Opening Solutions

960 series

Adams Rite aluminium door touch bar with concealed vertical rods.

Features and benefits

- Concealed vertical rods drive shoot bolts to secure to threshold and transom
- Solutions for a range of door widths and thicknesses
- Non-handed
- Dogging (hold back) via key operation within the touch bar as standard on all versions except 600mm
- Optional monitoring and cylinder dogging
- Can accept standard round mortice cylinder to allow external key access

Classification code

3	7	6	0	1	3	2	2	B	A
(3)	(6-7)	(5-7)	(0/A/B)	(1)	(3-4)	(2)	(1-2)	(A/B)	(A-C)

EN 1125 :2008

Testing and certification

UKCA / CE marked	Yes
Certified in compliance with	EN 1125
Suitable for fire doors	No
Certifire approval	No
Guarantee	3 years

Specification

Unit type	Panic unit
Activation	Touch bar
Door type	Single doorset. Rebated double doorset - inactive leaf. Plain meeting stile double doorset - either leaf
Door opening	Outward
Projection	76mm from door face
Mounting method	Surface mounted bar with concealed vertical rod
Backset	Available in 24.6mm, 28.6mm and 38.1mm Requires a minimum door stile depth of 16.3mm greater than the backset
No. of locking points	N/A
Bolt style	Shoot bolts
Durability	200,000 cycles
Max door width	Depends on variant, see how to order
Max door height	2500mm
Max door mass	Up to 200kg
Operation	Pressing the touch bar into the door face retracts the shoot bolts. The bolts remain retracted until automatically released on closing of the door
Handing	Universal
Finish	SAA
Accessories	N/A

Dimensions

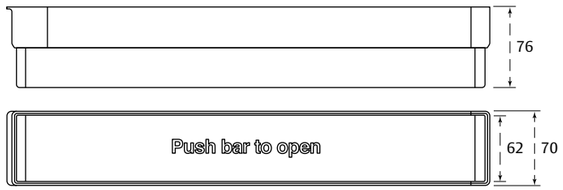

How to order

960 – XX – X – 999 – 628 – XXX

Door material
960 Aluminium

Options
- **00** Standard model
- **01** Cylinder dogging
- **02** Single switch monitoring
- **03** Double switch monitoring

Max door opening width options
- **1** 600mm
- **2** 750mm
- **3** 900mm
- **4** 1050mm
- **5** 1200mm

Handing
- **9** Not applicable

Faceplate shape
- **9** Not applicable

Backset
- **9** Not applicable

Finish
628 Satin anodised aluminium

Door thickness options
- **blank** 44mm
- **947** 47mm
- **950** 50mm
- **952** 52mm
- **967** 67mm
- **974** 74mm

Panic and emergency hardware accessories

Types of accessories you will find included:

- Keeps
- Dogging devices
- Rebate kits

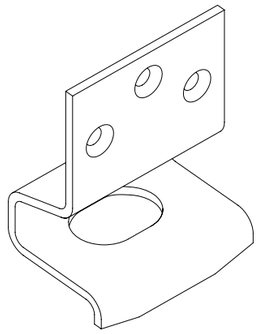

General panic and emergency hardware accessories

Product code	Description	Compatible with	Finish	Image
299	Dogging hold-back device	294, 294A, 293, 293A, 284, 284A, 285, 285A	SIL, SSE	
RK13	12mm rebate set for cylinder mortice nightlatch Please state handing requirement	305, 306	SSS	
RK25	25mm rebate set for cylinder mortice nightlatch Please state handing requirement	305, 306	SSS	

Timber door keeps

Product code	Description	Compatible with	Finish	Image
2405	Top trip • Surface mounted keep for top shoot bolts on timber and steel frames • For flush fitting doors / frames	284, 284A, 285, 285A, 293, 293A, 294, 294A	EGALV RAL finish on request	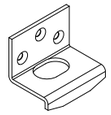 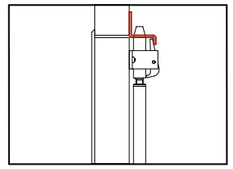
2401	Top trip • Surface mounted keep for top shoot bolts • Kit supplied includes spacers for applications where the distance between the header rail and the door face is between 14mm and 21mm	284, 284A, 285, 285A. 293, 293A, 294, 294A	EGALV RAL finish on request	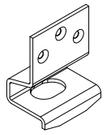 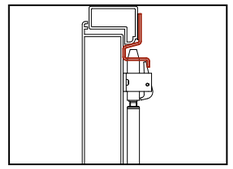
300	Rebated double door latch keep • Alternative keep for securing latchbolt on double doorset	296, 297	EGALV RAL finish on request	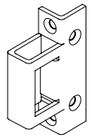 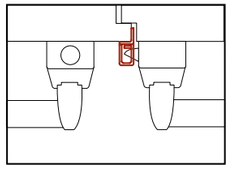
P1301	Bottom shoot bolt keep • Alternative keep for securing bottom shoot bolt on single or double doorset	293, 294	EGALV	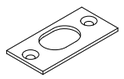 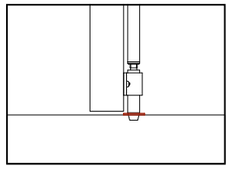
ED150	Latch keep • Alternative keep for securing latchbolt on single or double doorset	296, 297	EGALV RAL finish on request	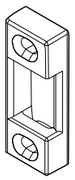 Single doorset 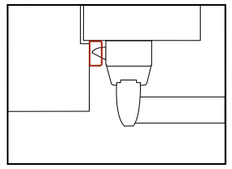 Double doorset 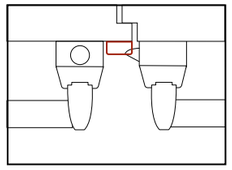

Steel door keeps

Product code	Description	Compatible with	Finish	Image
2405	Top trip • Surface mounted keep for top shoot bolt on timber and steel frames • For flush fitting doors / frames • Used with 200 series panic bolts	284, 284A, 285, 285A, 293, 293A, 294, 294A	EGALV RAL finish on request	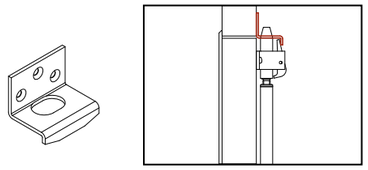
P1301	Bottom shoot bolt keep • Alternative keep for securing bottom shoot bolt on single or double doorset	293, 294	EGALV	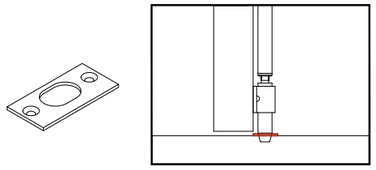
ED150	Latch keep • Alternative keep for securing latch bolt on single or double doorset	296, 297	EGALV RAL finish on request	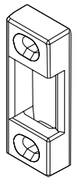 Single doorset 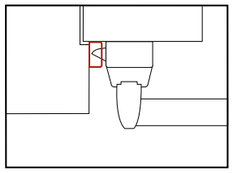 Double doorset 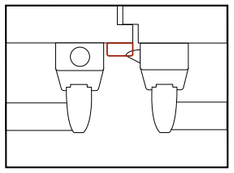

uPVC door keeps

Product code	Description	Compatible with	Finish	Image
2401	Top trip • Surface mounted keep for top shoot bolts • Kit supplied includes spacers for applications where the distance between the header rail and the door face is between 14mm and 21mm	284, 284A, 285, 285A, 293, 293A, 294, 294A	EGALV RAL finish on request	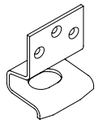 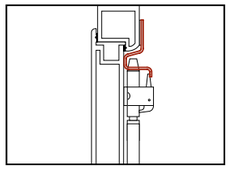
2402	Bottom keep • For UPVC doors / frames that have a high threshold • Complete with spacers for applications where the distance between the door face and face of the threshold is between 14mm and 21mm • Ideal to use with 2401 top trip keep	284, 284A, 285, 285A, 293, 293A, 294, 294A	EGALV RAL finish on request	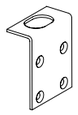 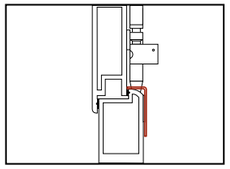

Slimline panic and emergency exit hardware accessories

Timber door keeps

Product code	Description	Compatible with	Finish	Image
SL-0144	Latch keep • Surface mounted keep for latch bolts on timber frames • For rebated or non-rebated double doorset or single door	501, 503, 513, 523	BLK RAL finish on request	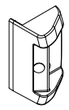 Double door application 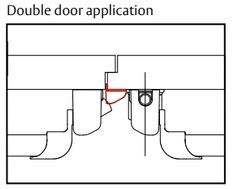 Single flush faced door frame application 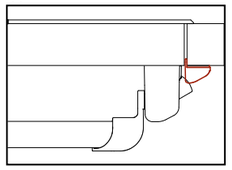
2405	Top trip • Surface mounted keep for top shoot bolts on timber frames • For flush fitting doors / frames	502, 503	EGALV RAL finish on request	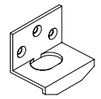 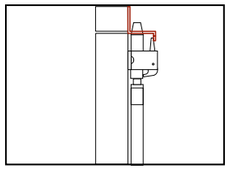
2401	Top trip • Surface mounted keep for top shoot bolts • Kit supplied includes spacers for applications where the distance between the header rail and the door face is between 14mm and 21mm	502, 503	EGALV RAL finish on request	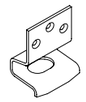 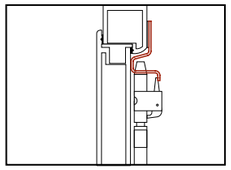
3402	Standard vertical Pullman latch keep • Surface mounted keep for top and bottom vertical Pullman latches	512 and 513 single doors	BLK RAL finish on request	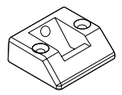 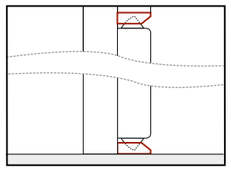

ASSA ABLOY
Opening Solutions

Timber door keeps (continued)

Product code	Description	Compatible with	Finish		Image
406A	Horizontal Pullman latch keep for rebated double doors or vertical / horizontal Pullman for flush single door / frames • Used with the Exidor horizontal Pullman latches for double rebated door applications or as top keep for flush door / frames	522 and 523 double doors 512 and 513 single doors	BLK RAL finish on request	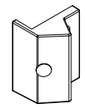 	Horizontal pullman 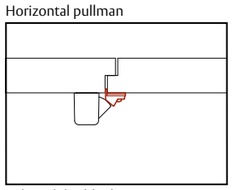 Rebated double door Horizontal pullman 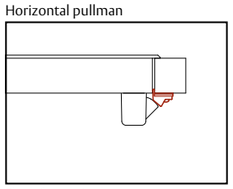 Flush faced single door Vertical pullman 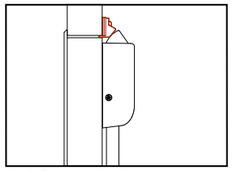 Flush faced single door

uPVC door keeps

Product code	Description	Compatible with	Finish		Image
2401	Top trip • Surface mounted keep for top shoot bolts • Kit supplied includes spacers for applications where the distance between the header rail and the door face is between 14mm and 21mm	502, 503	EGALV RAL finish on request	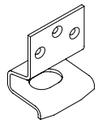	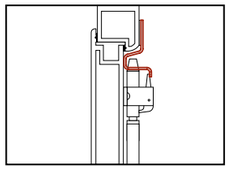
SL-0159	Threshold seal bottom keep • Bottom bolt keep plate for use with a vertical faced threshold seal • No clearance hole in the floor or threshold seal required • Multiple keeps can be used for additional thickness, if required	502, 503	SF		(Aluminium Version) 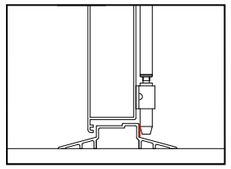
SL-0151	uPVC bottom keep • For uPVC doors / frames that have a high threshold • Complete with spacers for applications where the distance between the door face and the face of the threshold is between 14mm and 21mm	502, 503	White RAL finish on request	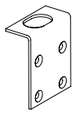	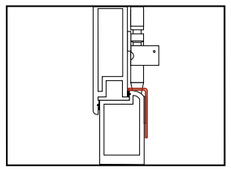

Aluminium door keeps

Product code	Description	Compatible with	Finish		Image
SL-0144	Latch keep • Surface mounted keep for latch bolts on timber frames • For rebated or non-rebated double doorset or single door	501, 503, 513, 523	BLK RAL finish on request	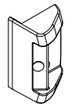	Double door application 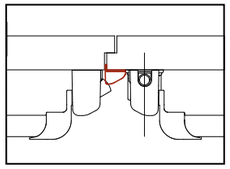 Single flush faced door frame application 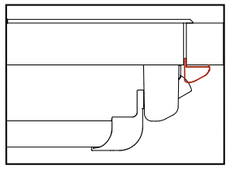
2401	Top trip • Surface mounted keep for top shoot bolts • Kit supplied includes spacers for applications where the distance between the header rail and the door face is between 14mm and 21mm	502, 503	EGALV RAL finish on request	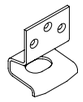	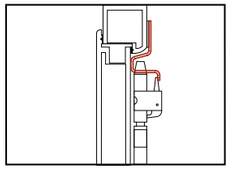
2405	Top trip • Surface mounted keep for top shoot bolts on timber frames • For flush fitting doors / frames	502, 503	EGALV RAL finish on request	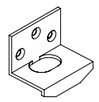	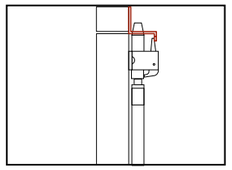
SL-0159	Threshold seal bottom keep • Bottom bolt keep plate for use with a vertical faced threshold seal • No clearance hole in the floor or threshold seal required • Multiple keeps can be used for additional thickness, if required	502, 503	SF		(Aluminium Version) 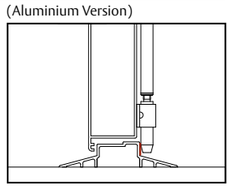
SL-0317	Horizontal Pullman latch keep • Used with the Exidor horizontal Pullman latches for both flush fitting doors/frames and on double rebated door applications	522 and 523	EGALV		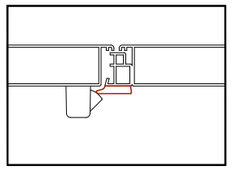

Touch bar and touch bar electronic latch retraction panic hardware accessories

Timber and steel door keeps

Product code	Description	Compatible with	Finish	Image
406A	Horizontal Pullman latch keep for rebated double doors or vertical / horizontal Pullman for flush single door / frames • Used with the Exidor horizontal Pullman latches for double rebated door applications or as top keep for flush door / frames	402, 403, 404, 405, 416, 417, 418, 419, 466, 467, 468, 469	SIL	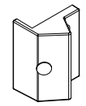 Horizontal pullman 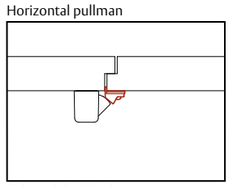 Rebated double door Horizontal pullman 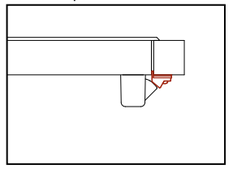 Flush faced single door Vertical pullman 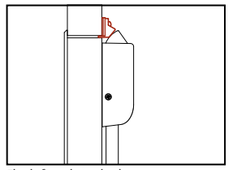 Flush faced single door
406B	Centre latch keep for rebated double doors / single flush faced doors and frames • Used with Exidor latches and three point panic bolts when used on rebated double doors or single flush faced doors and frames	400, 401, 404, 405, 418, 419, 450, 451, 468, 469	SIL	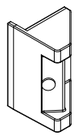 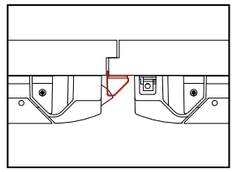 Centre latch 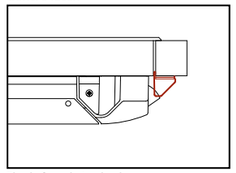 Flush faced single door

Hinges

Introduction	294
Legislation	303
Product selector	306
Ball bearing butt hinges	309
Bushed bearing hinges	317
Journal supported hinges	325
Specialist hinges	337

Hinges

The entire function of a door relies on the quality and correct specification of the hinges. Hinges connect two things together, bearing the weight from one to the other about a fixed axis of rotation allowing it to open and close easily. They are found on virtually all doors in a home, mains doors, and commercial buildings. There are a large variety of hinge types and sizes available depending on the type of application required.

Failure of the hinges and/or incorrect specification can have significant consequences for the lifespan of doors, including safety critical fire doors, within the buildings they protect.

Our ranges offer quality, robustness and reliability for most door requirements. We have a variety of hinges that can be specified for residential or commercial settings in different finishes to suit all of the door hardware to complete the overall aesthetics of a door.

Key features

- Meet all of the relevant standards and certification
- Constructed from high grade quality materials and rigorously tested
- Combination of performance, durability and good value

Types of hinges

Butt hinge

Supplied as non-handed complete assembled hinge with frame and door leaves encapsulated by end caps. Available with different bearing types. Traditional design preferred by many.

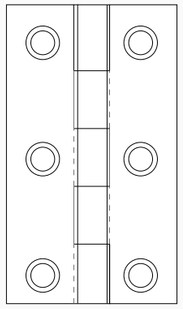

Ball bearing butt hinge

Equipped with ball bearings in the knuckle of the hinge to reduce friction. Strong and durable, ball bearing butt hinges are a minimum requirement for large, heavy doors. Around the central pin there are ball bearings which create a permanently lubricated surface area, this allows for doors to swing smoothly with less force required.

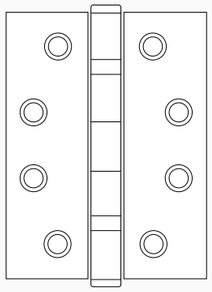

Bushed bearing butt hinge

High performance bushed bearing butt hinges are suitable for severe duty applications for doors that are subject to frequent misuse. Suitable for 120kg doors mass with congruent fixing patterns that spread the load of the door more effectively within the timber.

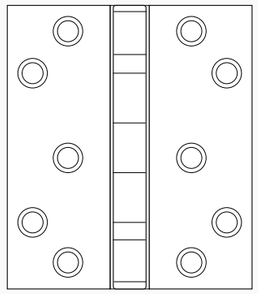

Journal supported hinge

Suitable for heavy duty applications and for use on doors that are subject to a high frequency of use by the public with little incentive to exercise care. Generally used within healthcare projects.

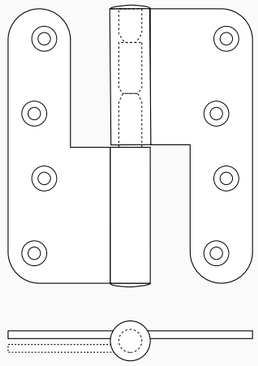

Types of hinges

Lift off hinge

Supplied as handed in 2 parts for final doorset assembly on site. Frame leaf knuckle includes male pin to engage with bore in female knuckle within the door leaf. Available with different bearing types. Enables frames and doors to be made, shipped and fitted separately during the build as well as easy ongoing maintenance.

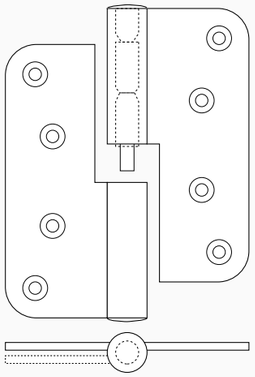

Slim knuckle hinge

Suitable for use on standard internal doorsets, predominantly for domestic doors but can be used in some instances on commercial buildings where appropriate.

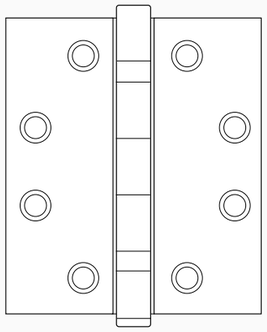

Security hinge

Ideal for high use public areas, these are generally found on exterior doors. The hinge features interlocking lugs or pins (dog bolt) on the leaf of the hinge which locate into a recess in frame leaf, preventing the door being removed in the event of the hinge pin being attacked.

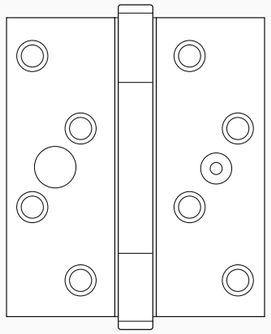

Concealed hinge

Perfect for high end projects, as the hinge will be hidden away between the doors and frame to provide a clean aesthetic appearance.

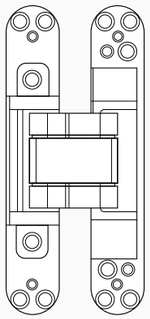

How to select the correct hinge

To specify the correct hinge there are a number of factors that need to be taken into consideration, such as:

- Is it a fire, smoke or emergency escape door?
- How heavy is the door and what are the door dimensions (height, weight, thickness)?
- Is the door situated internally or externally?
- What level of use and/or abuse?
- What other hardware is fitted on the door that may affect the performance?
- Special environmental considerations, such as corrosive chemicals or marine environment (base metal impact).

Step 1 | Find the weight of the door

The weight of the door determines the correct hinge to use. When calculating this it's important to include the weight of any additional ironmongery attached to the door. This can include locks, furniture and door closers.

The basic weight of the door should then be adjusted to take into account any special factors. To do this, apply all of the relevant percentage increase(s) from the table below, then multiply them by the basic weight. This will give you the initial adjusted weight.

Factor	Adjustment	Notes
Non-backcheck door closer fitted	+20%	Adjustment recommended by EN 1935
Backcheck door closer fitted	+75%	Adjustment recommended by EN 1935
Subject to high wind forces	+10%	Adjustment recommended by EN 1935
Subject to physical abuse	+10%	Door hardware group recommendation
Duty	Select hinge to suit level of duty as recommended by EN 1935 (see table below)	

Duty	Type of use	Typical applications	EN grade	Recommended hinges
Heavy duty	High frequency of use by members of the public	Public, institutional and commercial buildings	11	3220, 604, CE11
Severe duty	Doors potentially subject to abuse or violence	Security doors	13-14	3228, 3248, 3278, 3288, 603, 605, J-C433, CE13

Step 2 | Check door adjusted weight against door width

Having calculated the initial adjusted weight of the door, this should be cross referenced with the width of the door in the chart below, to identify the width adjustment.

Multiply the initial adjusted weight by the width adjustment to obtain the final adjusted weight.

Note: For door sizes not listed in the chart, use the formula: 2 - (height/width) %

Door size		Width adjustment
Height (mm)	Width (mm)	
2,000	Up to 1,000	0
2,000	1,050	+10%
2,000	1,100	+18%
2,000	1,150	+26%
2,000	1,200	+33%
2,000	1,250	+40%

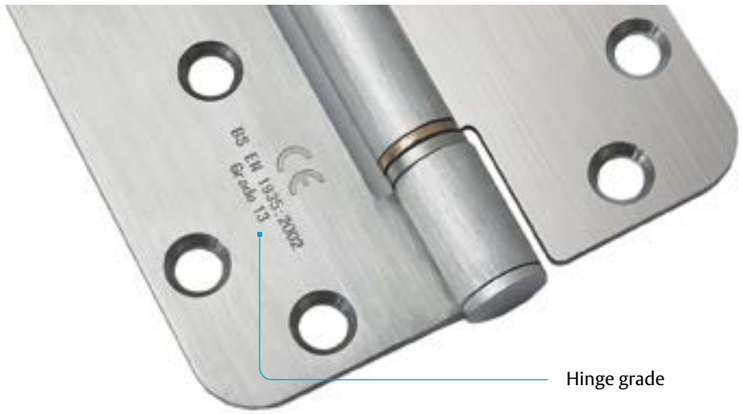

Step 3 | Determine hinge grade required

The final adjusted weight of the door should be checked in the table below to determine which grade of hinge is required.

However, please note that hinges which could be subject to abuse or rough handling may need to be of a higher grade (heavy or severe duty) than would otherwise be indicated by the door weight alone. Check the table to make sure that a suitable hinge is specified.

Please note: Grade 11 hinges are not generally suitable when a door closer with backcheck is specified.

Final adjusted weight	Hinge grade required	Recommended hinges
Up to 80kg	Grade 11	3220, 604, CE11
80kg - 120kg	Grade 13	3228, 3248, 603, 605, J-C433, CE13
121kg - 160kg	Grade 14	3278, 3288

If your project requires non-graded or lower graded hinges for non-fire rated or internal doors please contact us to get further information on suitable hinges we can supply.

Step 1-3 | Example

A perimeter security door is

- 1,150mm wide
- Weighs 50kg
- Fitted with 5kg of ironmongery
- Fitted with a backcheck door closer (+75%)
- Subject to high wind forces (+10%)
- Subject to physical abuse (+10%)

Step	Process
Step 1 Initial adjusted weight	Basic weight: 55kg (50kg plus 5kg) 107kg (55kg plus 95% = 55 x 1.95) [95% is from 75%+10%+10%]
Step 2 Final adjusted weight	135kg (107kg plus 26% = 107 x 1.26) [26% is from width 1,150mm)
Step 3 Hinges required	135kg is within Grade 14 range of 121-160kg and we recommend superior Journal supported hinges (Grade 14) Because of the potential for abuse, severe duty hinges would be indicated. However, Grade 14 already meets this requirement

ASSA ABLOY
Opening Solutions

Step 4 | Hinge positioning

EN 1935 recommends that at least three hinges should always be fitted on a door. This is especially important when a door closer is also installed.

EN standards shown in this manual are based on the use of three hinges per door. However, we recommend that four hinges are used on doors over 2,250mm in height.

Doors with door closers

Three hinges – two at the top and one at the bottom for improved load bearing

For some fire doors (heavier construction or with a hold open door closing device) it is best practice to fit two hinges at the top of the door with the third hinge at the bottom of the door.

Hinges should be positioned as follows:

- Centre line of the top hinge 250mm from the top edge of the door.
- Centre line of the third hinge is 200mm from the centre line of the top hinge.
- Centre line of the bottom hinge 250mm from the bottom edge of the door.

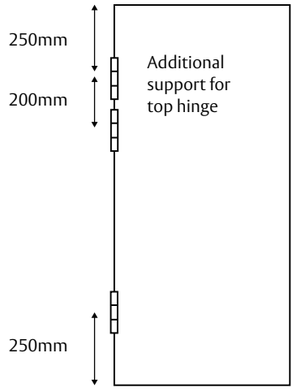

Heavy doors

For doors heavier than the recommended door mass, it may be possible to install **two hinges high and two hinges low for improved load bearing capacity**.

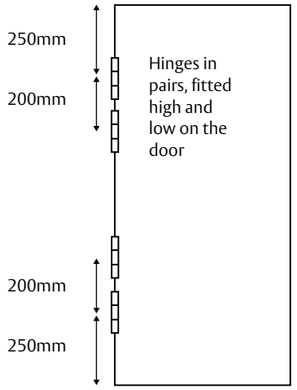

Doors over 2100mm high

It is possible to use **four hinges equally spaced to give maximum resistance to warping**.

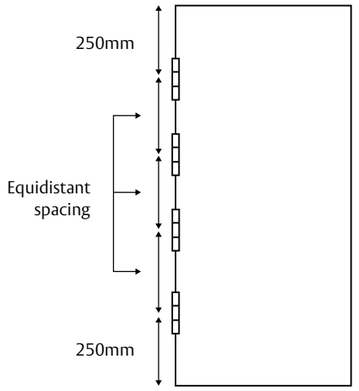

Door stop	Number of hinges	Additional information
Standard doors	Three hinges to be fitted	This gives the most effective load bearing capability
Heavy doors	Four hinges to be fitted	Recommendation based on load bearing as the prime consideration
Tall doors (over 2,250mm)	Four hinges to be fitted (equally spaced)	For tall doors, or those which are particularly subject to warping such as glazed doors

Step 5 | Handing

For lift-off hinges only where it is essential to ensure the male hinge blade (with spigot) is fitted to the frame and the female hinge blade is fitted to the door leaf. On outer perimeter doors, knuckles should ideally be on the inside of the door for increased protection against attack. Use the diagrams below to select the correct handing for each application.

Single doors inward opening

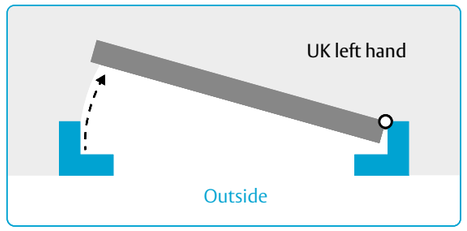

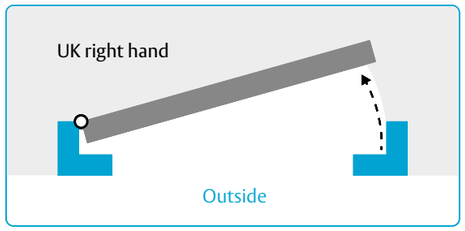

Single doors outward opening

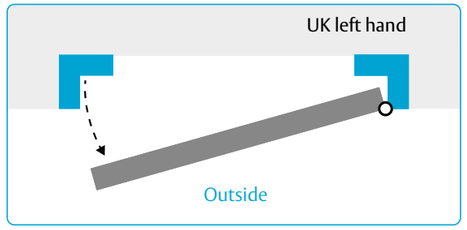

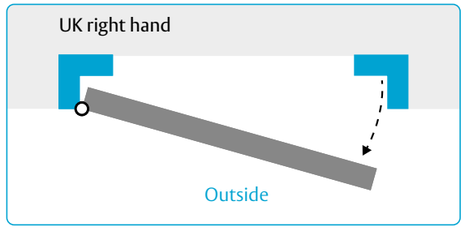

Step 6 | Fitting and lubrication

Hinges should be morticed into the edge of the door and the frame. Make sure all hinges fitted to the door are lined up vertically.

On a standard 44mm door, the centreline of the narrow part of the hinge leaf should align with the centreline of the door. The hinge knuckle will project beyond the face of the door, as shown above. If the hinge requires it, lubrication should normally be carried out on installation and then twice a year.

Only use the screws provided or recommended when fitting hinges, as the load carrying capacity of the hinge is dependent on the correct screws being used. A pilot hole should be drilled for the screws.

Legislation

EN 1935:2002 - single axis hinges

EN 1935:2002 classifies single axis hinges using an 8-digit coding system. Each digit refers to a particular feature of the product measured against the standard's performance requirements (see Hinges classification key).

It is a legal requirement for hinges being fitted to fire doors to be UKCA / CE marked to EN 1935.

Our policy is to test and classify our single axis hinges according to EN 1935. By seeing this information you can be confident that the hinges chosen will meet the performance requirements of any particular application.

Lift-off and butt hinges can be tested to EN 1935 and UKCA / CE marked by an independent Notified Body, provided they meet all other criteria of the standard. All hinges featured in this specification manual are UKCA / CE marked.

Furthermore our manufacturing plant is registered to ISO 9001, the international quality standard. This enables us to guarantee that all our products will meet our stringent quality requirements.

To pass testing under EN 1935:2002 hinges must:

- Be strong enough to carry the relevant test door mass
- Be robust enough to work efficiently, whatever the traffic
- Suit opening requirements (normal swing, swing clear, projecting)
- Be durable enough to last according to the duty required
- Be suitable, as required, for application on fire/smoke doors, security doors, self-closing doors and external doors
  - EN 1935 has two means of demonstrating fire door suitability - EN 1634-1 fire testing or minimum melting point declaration

Further legislation and certification information can be found in the standards and legislation section

ASSA ABLOY
Opening Solutions

EN 1935 classification key

	EN 1935:2002 Grading scope
CATEGORY OF USE Four categories of use are identified: **Grade 1:** Light duty **Grade 2:** Medium duty **Grade 3:** Heavy duty **Grade 4:** Severe duty	(1-4)
NUMBER OF TEST CYCLES Three grades are identified for single-axis hinges manufactured to this European standard: **Grade 3:** 10,000 test cycles, for light duty hinges on windows only **Grade 4:** 25,000 test cycles, for light duty hinges on windows and doors **Grade 7:** 200,000 test cycles, for medium, heavy and severe duty hinges on doors only	(3/4/7)
DOOR MASS/SIZE (see table opposite) Eight door mass grades related to single-axis hinges are identified in this standard as shown in table opposite	(0-7)
FIRE BEHAVIOUR AND RESISTANCE Two grades of suitability are identified for single-axis hinges: **Grade 0:** Not suitable for fire/smoke resistant door assemblies **Grade 1:** Suitable for fire/smoke resistant door assemblies subject to satisfactory assessment of the contribution of the single axis hinge to the fire resistance of the specified fire/smoke door assemblies	(0/1)
SAFETY Single-axis hinges are required to satisfy the essential requirements of safety in use. Therefore, only grade 1 is identified.	(1)
CORROSION RESISTANCE Five grades of corrosion resistance are identified in accordance with EN 1670:2007 **Grade 0:** No defined corrosion resistance **Grade 1:** Mild resistance **Grade 2:** Moderate resistance **Grade 3:** High resistance **Grade 4:** Very high resistance	(0-4)
SECURITY Two grades of security are identified for single-axis hinges: **Grade 0:** Not suitable for use on burglar-resistant door assemblies **Grade 1:** Suitable for applications requiring a degree of security. Annex C of this standard details the hinge grade to use for the level of security required	(0/1)
HINGE GRADE (see table opposite) Fourteen grades are identified in this standard and are detailed in the table opposite. The full classification is shown in the standard Grade 1-10 hinges are for light to medium duty only, while Grade 11-14 hinges are also suitable for heavy and severe duty	(1-14)

Door mass/size

Test door mass size	Door mass
0	10kg
1	20kg
2	40kg
3	60kg
4	80kg
5	100kg
6	120kg
7	160kg

Hinge grade

Test door mass size	Usage	Test cycles	Door mass
1	Window	10,000	10kg
2	Window	10,000	20kg
3	Window/door	25,000	20kg
4	Door	200,000	20kg
5	Window	10,000	40kg
6	Window/door	25,000	40kg
7	Door	200,000	40kg
8	Window	10,000	60kg
9	Window/door	25,000	60kg
10	Door	10,000	60kg
11	Door	200,000	80kg
12	Door	200,000	100kg
13	Door	200,000	120kg
14	Door	200,000	160kg

European technical assessment for multi axis hinges

The European Assessment Document EAD-020001-00-0405 provides a means of assessing multi-axis hinges. This standard is an assessment of the fire door testing and durability of the hinge.

This standard only relates to our OTLAV concealed hinge range.

To pass testing under EAD-020001-00-0405 hinges must:

- Meet the fire and mechanical performance of this standard due to the multiple knuckles or pivot points within a concealed hinge
- Be strong enough to carry the relevant test door mass. Be durable enough to last according to the duty required
- Be suitable, as required, for application on fire and smoke doors and doors in escape routes

ASSA ABLOY
Opening Solutions

Product selector

		Ball bearing butt hinges			Bushed bearing hinges				Journal supported hinges					Slim knuckle hinges	Specialist hinges	Concealed hinges
		CE11	CE13	J-C433	603	604	605		3220	3228	3248	3278	3288	CE13 slim knuckle	CE13 security	OTLAV
Door mass	80kg	●				●			●							
	120kg		●	●	●		●			●	●			●	●	●
	160kg											●	●			
Door construction	Solid core doors	●	●	●	●	●	●		●	●	●	●	●	●	●	●
	Hollow core doors	●	●	●	●	●	●		●	●	●	●	●	●	●	
	Maintenance free				●	●	●								●	●
	External doors		●	●	●	●	●			●	●	●	●		●	●
Corrosion grade	Grade 1-2	●	●		●	●	●			●	●	●	●			
	Grade 3-4		●	●	●	●	●		●	●	●	●	●	●	●	●
Hinge grade	Grade 11	●				●			●							
	Grade 13		●	●	●		●			●	●			●	●	
	Grade 14											●	●			
Duty	Heavy duty	●				●			●							
	Severe duty		●	●	●		●			●	●	●	●	●	●	
Material grade	201		●	●	●	●	●							●	●	
	304				●	●	●									
	316															
Style	Radius				●	●	●		●	●	●	●	●			●
	Square	●	●	●	●		●							●	●	
Security	Dogbolt														●	
Certification	UKCA / CE marked	●	●	●	●	●	●		●	●	●	●	●	●	●	
	EN 1935	●	●	●	●	●	●		●	●	●	●	●	●	●	
	Certifire	●	●	●	●	●	●							●	●	
Fire testing	Timber FD30	●	●		●	●	●							●	●	
	Timber FD60	●	●	●	●	●	●							●	●	
	Timber FD90															●
	Timber FD120															
	Metal FD240			●												
	Melting point 800° C +								●	●	●	●	●			

Ball bearing butt hinges

A ball bearing hinge has ball bearings in the knuckle of the hinge to reduce friction and create a permanently lubricated surface area. This makes opening and closing a door consistently easier, smoother and quieter, plus it helps the door to swing smoothly with less force required.

Most internal doors will require two hinges to function. For doors with added security requirements and/or containing door closers, three hinges will be required to help prevent forced entry.

Range benefits

- Ideal for low and medium frequency used doors in residential and light commercial
- Strength and durability of ball bearing butt hinges are suitable for large, heavy doors
- Ball bearings located in the knuckles of a hinge provide a smooth action, excellent strength and durability

ASSA ABLOY
Opening Solutions

CE11

Grade 11 UKCA / CE marked ball bearing hinge suitable for both commercial and residential use on doors up to 80kg.

Features and benefits

- Suitable for both standard and fire doors in commercial and residential environments
- The ball bearing knuckle provides doors with a smooth operation
- Made from durable steel

Classification code

3	7	4	1	1	3	0	11
(1-4)	(6-7)	(0-7)	(0/1)	(1)	(0-4)	(0/1)	(1-14)

EN 1935:2002

UKCA CE 1 YEAR GUARANTEE 80 kg MAX WEIGHT GRADE 11

certifire

Testing and certification

UKCA / CE marked	Yes
Certified in compliance with	EN 1935 (grade 11 heavy duty)
Suitable for fire doors	Timber FD30/FD60. Intumescent protection must be used.
Certifire approval	Yes
Guarantee	1 year

Specification

Maximum door weight	80kg
Tested to	200,000 cycles
Dimension (H x W x D)	102 x 76 x 2.5mm
Finishes	PCP, SC, SNP, PEB, ANB, BLK, BNKL
Material	Mild steel
Handing	Non-handed
Minimum door thickness	35mm
Screws	5mm x 32mm twin thread hardened pozi wood screw

Dimensions

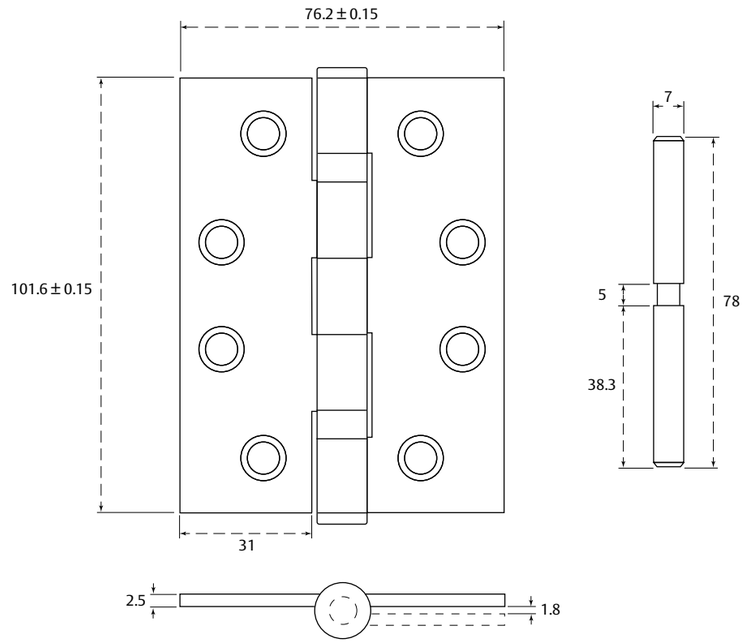

How to order

Order code	Description	Finish
XL866	CE11 ball bearing butt hinge (pair)	PCP
XL867	CE11 ball bearing butt hinge (pair)	SC
XL868	CE11 ball bearing butt hinge (pair)	SNP
XL869 –PEB	CE11 ball bearing butt hinge (pair)	PEB
XL869 – ANB	CE11 ball bearing butt hinge (pair)	ANB
XL869 – BLK	CE11 ball bearing butt hinge (pair)	BLK
XL869 – BLNK	CE11 ball bearing butt hinge (pair)	BNKL
XL502	FD30 intumescent square hinge plates, 100 x 30 x 1mm (quantity 6)	N/A
XL503	FD60 intumescent square plates, 100 x 30 x 2mm (quantity 6)	N/A

ASSA ABLOY
Opening Solutions

CE13

Grade 13 hinge suitable for heavy doors in industrial, commercial and domestic environments.

Features and benefits

- Grade 13 hinge for use on heavy doors up to 120kg
- Five knuckle ball bearing hinge
- Template drilled for consistency and accuracy

Classification code

4	7	6	1	1	4	0	13
(1-4)	(3/4/7)	(0-7)	(0/1)	(1)	(0-4)	(0/1)	(1-14)

EN 1935:2002

UK CA CE 1 YEAR GUARANTEE 120 kg MAX WEIGHT GRADE 13

certifire

Testing and certification

UKCA / CE marked	Yes
Certified in compliance with	EN 1935 (grade 13 severe duty)
Suitable for fire doors	Timber FD30/FD60. Intumescent protection must be used.
Certifire approval	Yes
Guarantee	1 year

Specification

Maximum door weight	120kg
Tested to	200,000 cycles
Dimension (H x W x D)	102 x 76 x 3mm
Finishes	SSS, PSS, PEB
Material	201 Stainless steel
Handing	Non-handed
Minimum door thickness	40mm
Screws	5mm x 32mm twin thread hardened pozi wood screw

Dimensions

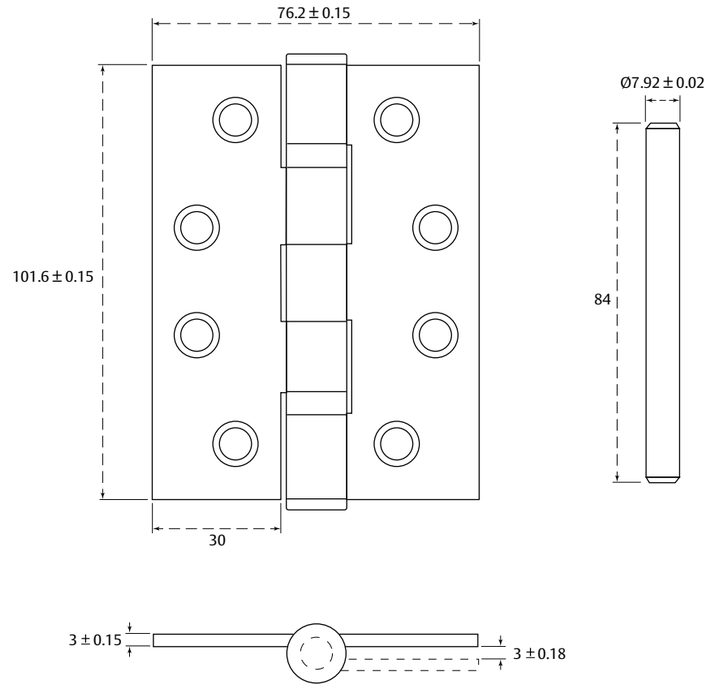

How to order

Order code	Description	Finish
XL835	CE13 ball bearing butt hinge (pair)	SSS
XL836	CE13 ball bearing butt hinge (pair)	PEB
XL837	CE13 ball bearing butt hinge (pair)	PSS
XL502	FD30 intumescent square hinge plates, 100 x 30 x 1mm (quantity 6)	N/A
XL503	FD60 intumescent square hinge plates 100 x 30 x 2mm (quantity 6)	N/A

ASSA ABLOY
Opening Solutions

J-C433

UNION grade 13 hinge used to mount and operate doors in commercial properties.

Features and benefits

- Suitable for fire doors in commercial environments
- For use on heavy doors up to 120kg
- UKCA / CE marked and Certifire approved
- Designed and manufactured to a high standard

Classification code

4	7	6	1	1	4	0	13
(1-4)	(3/4/7)	(0-7)	(0/1)	(1)	(0-4)	(0/1)	(1-14)

EN 1935:2002

UKCA CE 5 YEAR GUARANTEE 120 kg MAX WEIGHT GRADE 13

certifire

Testing and certification

UKCA / CE marked	Yes
Certified in compliance with	EN 1935 (grade 13 severe duty)
Suitable for fire doors	Timber FD60, metal FD240. Intumescent protection must be used.
Certifire approval	Yes
Guarantee	5 years

Specification

Maximum door weight	120kg
Tested to	200,000 cycles
Dimension (H x W x D)	102 x 76 x 3mm
Finishes	SSS
Material	304 stainless steel
Handing	Non-handed
Minimum door thickness	40mm
Screws	5mm x 32mm twin thread hardened pozi wood screw

Dimensions

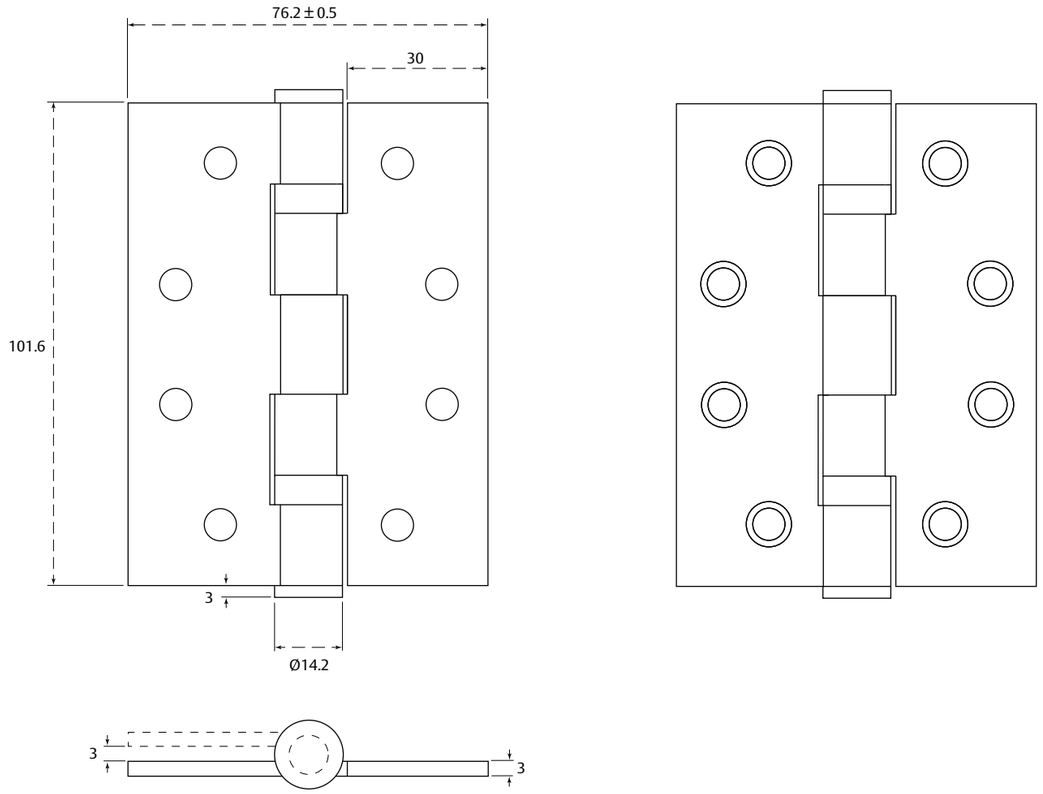

How to order

Order code	Description	Finish
J-C433-S-3-SSS	J-C433 ball bearing butt hinge	SSS

Bushed bearing hinges

The Powerload family comprises of butt and lift off hinge designs which all include bushed bearings for enhanced performance. The carbon steel and phosphorous bronze flanged bushed bearings provide long life which is virtually maintenance free. Supplied with a 25 year guarantee, this hinge family is ideal for environments where durability and reliability are paramount.

Butt hinges offer a traditional solution whether installing in factory to ship complete or installing on site. The fully enclosed pin offers improved durability.

Lift off hinges are designed for use on new build projects where doors are typically supplied to site later in the project, fully fitted with all the door hardware. Their design makes it easy to prepare the door and transport to site.

In addition their unique design allows easy installation and removal of doors on retro-fit projects, without having to remove the screws.

Range benefits

- Suitable for heavy duty applications and for high frequency use
- Lift off design allows easy installation and removal of doors
- Supplied handed where one leaf has a fixed pin and the opposite leaf can be lifted on and off the fixed pin
- Available in half leaf and full leaf
- Half leaf design reduces material removed from door on installation

ASSA ABLOY
Opening Solutions

High performance PowerLOAD 603

A highly durable grade 13 bushed bearing hinge that's designed for a long life and is virtually maintenance free.

Features and benefits

- Metal to metal wear and regular maintenance is significantly reduced by the carbon steel and phosphorous bronze flanged bearing bushes
- Phosphorous bronze ring offers a great looking finish and increases longevity
- Fixed pin for improved cycling and durability
- Congruent fixing pattern spreads the load of the door more effectively within the timber
- Radius and square corner variants available
- Radius corner offers speed of fixing with machine tools
- Ideal for environments where durability and reliability are paramount

UK CA CE 25 YEAR GUARANTEE GRADE 13 120 kg MAX WEIGHT EPD® certifire

Classification code

Stainless steel finish

4 (1-4) | 7 (3/4/7) | 6 (0-7) | 1 (0/1) | 1 (1) | 4 (0-4) | 0 (0/1) | 13 (1-14)

EN 1935:2002

Bright zinc plated finish

4 (1-4) | 7 (3/4/7) | 6 (0-7) | 1 (0/1) | 1 (1) | 2 (0-4) | 0 (0/1) | 13 (1-14)

EN1935:2002

Testing and certification

UKCA / CE marked	Yes
Certified in compliance with	EN 1935 (grade 13 severe duty)
Suitable for fire doors	Timber FD30/FD60. Intumescent protection must be used.
Certifire approval	Yes
Guarantee	25 years

Specification

Maximum door weight	120kg
Tested to	200,000 cycles
Dimension (H x W x D)	100 x 88 x 3mm
Finishes	BZP, SSS
Material	Mild steel, 304 stainless steel
Handing	Non-handed
Minimum door thickness	44mm
Screws	5.0 x 30mm sold separately

Dimensions

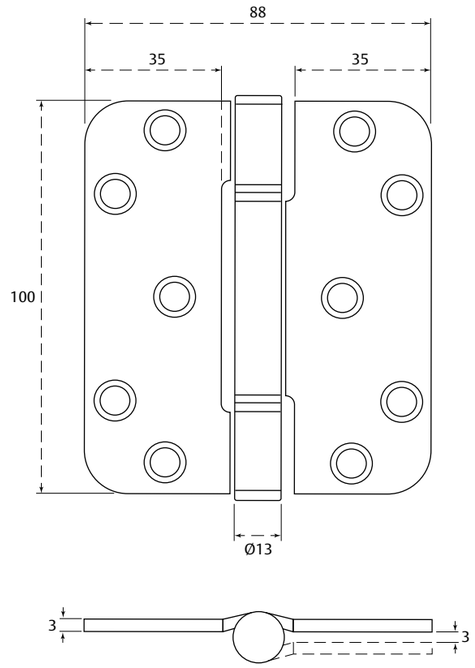

How to order

Order code	Description	Finish
JH603BUFR-M-BZP	Bushed bearing butt hinge radius corner (quantity 20)	BZP
JH603BUFR-M-SSF	Bushed bearing butt hinge radius corner (quantity 20)	SSS
JH603BUFS-U-BZP	Bushed bearing butt hinge square corner (quantity 3)	BZP
JH603BUFS-U-SSF	Bushed bearing butt hinge square corner (quantity 3)	SSS
J-HINGESC-10-SS	5.0 x 30mm wood screws (quantity 1,000)	SS
J-HINGESC-10-ZP	5.0 x 30mm wood screws (quantity 1,000)	ZP
J-603-IK	603 and 605 hinge intumescent pack includes 6 pads for 3 hinges, to fit one fire door	N/A
J-603-IK-BULK	603 and 605 hinge intumescent bulk pack includes 600 pads for 300 hinges, to fit 100 fire doors	N/A

ASSA ABLOY
Opening Solutions

High performance PowerLOAD 604

A highly durable grade 11 half leaf, lift-off hinge that's designed for a long life and is virtually maintenance free.

Features and benefits

- Grade 11 hinge, supports door weight up to 80kg
- Metal to metal wear and regular maintenance is significantly reduced by the carbon steel and phosphorous bronze flanged bearing bushes
- Phosphorous bronze ring offers a great looking finish and increases longevity
- Half leaf design reduces material removed from door on installation
- Congruent fixing pattern spreads the load of the door more effectively within the timber
- Radius variants available, radius corner offers speed of fixing with machine tools
- Sold with both leaves together, without screws
- Ideal for environments where durability and reliability are paramount

UK CA CE 25 YEAR GUARANTEE GRADE 11 80 kg MAX WEIGHT EPD® certifire

Classification code

Stainless steel finish

3 (1-4) | 7 (3/4/7) | 4 (0-7) | 1 (0/1) | 1 (1) | 4 (0-4) | 0 (0/1) | 11 (1-14)

EN 1935:2002

Bright zinc plated finish

3 (1-4) | 7 (3/4/7) | 4 (0-7) | 1 (0/1) | 1 (1) | 2 (0-4) | 0 (0/1) | 11 (1-14)

EN 1935:2002

Testing and certification

UKCA / CE marked	Yes
Certified in compliance with	EN 1935 (grade 11 heavy duty)
Suitable for fire doors	Timber FD30/FD60. Intumescent protection must be used.
Certifire approval	Yes
Guarantee	25 years

Specification

Maximum door weight	80kg
Tested to	200,000 cycles
Dimension (H x W x D)	98 x 82 x 3mm
Finishes	BZP, SSS
Material	Mild steel, 304 stainless steel
Handing	Left or right
Minimum door thickness	44mm
Screws	5.0 x 30mm sold separately

Dimensions

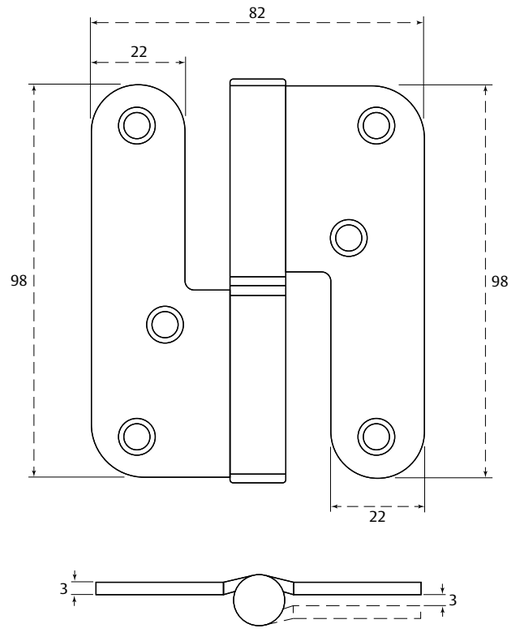

How to order

Order code	Description	Finish
JH604LARR-M-BZP	Lift-off hinge, radius corner, left hand (quantity 20)	BZP
JH604LALR-M-BZP	Lift-off hinge, radius corner, right hand (quantity 20)	BZP
JH604LALR-M-SSF	Lift-off hinge, radius corner, left hand (quantity 20)	SSS
JH604LARR-M-SSF	Lift-off hinge, radius corner, right hand (quantity 20)	SSS
J-HINGESC-10-SS	5.0 x 30mm wood screws (quantity 1,000)	SS
J-HINGESC-10-ZP	5.0 x 30mm wood screws (quantity 1,000)	ZP

ASSA ABLOY
Opening Solutions

High performance PowerLOAD 605

A highly durable grade 13 straight leaf lift-off hinge that's designed for a long life and is virtually maintenance free.

Features and benefits

- Grade 13 hinge, supports door weight up to 120kg
- Metal to metal wear and regular maintenance is significantly reduced by the carbon steel and phosphorous bronze flanged bearing bushes
- Phosphorous bronze ring offers a great looking finish and increases longevity
- Congruent fixing pattern spreads the load of the door more effectively within the timber
- Radius and square corner variants available, radius corner offers speed of fixing with machine tools
- Ideal for environments where durability and reliability are paramount

UKCA CE 25 YEAR GUARANTEE GRADE 13 120 kg MAX WEIGHT EPD® certifire

Classification code

Stainless steel finish

3	7	4	1	1	4	0	13
(1-4)	(3/4/7)	(0-7)	(0/1)	(1)	(0-4)	(0/1)	(1-14)

EN 1935:2002

Bright zinc plated finish

3	7	4	1	1	2	0	13
(1-4)	(3/4/7)	(0-7)	(0/1)	(1)	(0-4)	(0/1)	(1-14)

EN 1935:2002

Testing and certification

UKCA / CE marked	Yes
Certified in compliance with	EN 1935 (grade 13 heavy duty)
Suitable for fire doors	Timber FD30/FD60. Intumescent protection must be used.
Certifire approval	Yes
Guarantee	25 years

Specification

Maximum door weight	120kg
Tested to	200,000 cycles
Dimension (H x W x D)	100 x 88 x 3mm
Finishes	BZP, SSS
Material	Mild steel, 304 stainless steel
Handing	Left or right
Minimum door thickness	44mm
Screws	5.0 x 30mm sold separately

Dimensions

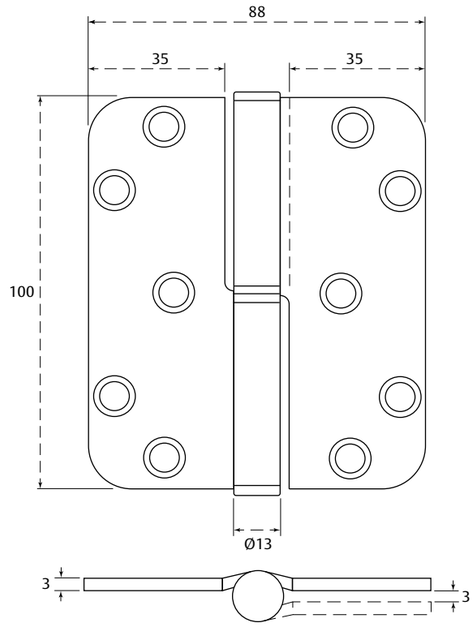

How to order

Order code	Description	Finish
JH605LOLR-M	Lift-off hinge, radius corner, left hand (quantity 20)	BZP, SSS
JH605LORR-M	Lift-off hinge, radius corner, right hand (quantity 20)	BZP, SSS
JH605LOLS-U	Lift-off hinge, square corner, left hand (quantity 3)	BZP, SSS
JH605LORS-U	Lift-off hinge, square corner, right hand (quantity 3)	BZP, SSS
J-HINGESC-10-SS	5.0 x 30mm wood screws (quantity 1,000)	SS
J-HINGESC-10-ZP	5.0 x 30mm wood screws (quantity 1,000)	ZP
J-603-IK	603 and 605 hinge intumescent pack includes 6 pads for 3 hinges to fit one fire door	N/A
J-603-IK-BULK	603 and 605 hinge intumescent bulk pack includes 600 pads for 300 hinges to fit 100 fire doors	N/A

Additional options:

Suffix order code with "**-BZP**" for bright zinc plated finish or "**-SSF**" for stainless steel finish.

Journal supported hinges

Journal supported lift-off hinges are suitable for heavy duty applications and for use on doors which are subject to a high frequency of use by the public with little incentive to exercise care.

The journal supported design allows the weight to be carried pin-on-pin, offering a very low friction design and smooth door operation, with a greater load bearing capacity than traditional butt hinges.

These hinges are supplied handed where frame leaf has a fixed pin and the opposite door leaf can be lifted on and off the fixed pin.

Range benefits

- Aesthetically pleasing journal design offers maximum durability with minimum maintenance requirements
- Allows door to be temporarily removed to improve access
- Ideal for healthcare buildings where doors can't be out of action
- Suitable for doorsets assembled in either factory or on-site
- Adjustment discs allow for door drop compensation and protects door and surroundings during life cycle

ASSA ABLOY
Opening Solutions

3220

Grade 11 journal supported, half leaf, lift-off hinge with a unique design that's ideal for applications where security and attack resistance are important.

Features and benefits

- Unique method of securing the pins so they can't be driven out, which increases security and resistance to attack
- Hardened steel pins reduce wear and increase life cycle
- Chamfered hinges with short pins and radiuses allows easier installation
- Half leaf design reduces mortice preparation required for fitting
- Sold as both leaves and separate leaves, with or without screws

Classification code

3 (1-4) | 7 (3/4/7) | 4 (0-7) | 1 (0/1) | 1 (1) | 3 (0-4) | 0 (0/1) | 11 (1-14)

EN 1935:2002

UKCA CE 2 YEAR GUARANTEE GRADE 11 80 kg MAX WEIGHT EPD®

Testing and certification

UKCA / CE marked	Yes
Certified in compliance with	EN 1935 (grade 11 heavy duty)
Suitable for fire doors	Suitable for timber and metal doors where a melting point higher than 800°C is required
Certifire approval	No
Guarantee	2 years

Specification

Maximum door weight	80kg
Tested to	200,000 cycles
Dimension (H x W x D)	98 x 82 x 3mm
Finishes	BZP
Material	CS4 grade rolled mild steel
Handing	Left or right
Minimum door thickness	28mm
Screws	Supplied with or without 3.5 x 12mm wood screws

Dimensions

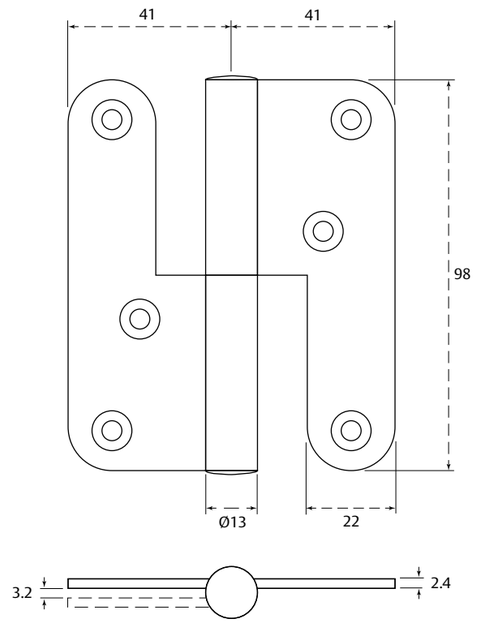

How to order

Order code	Description	Handing	Full hinge	Finish
80967210357	3220 door and frame leaves, right hand with screws	Right	Yes	BZP
80967210557	3220 door and frame leaves, left hand with screws	Left	Yes	BZP
80967390057	3220 door leaf right hand, without screws	Right	No, door leaf only	BZP
80967490057	3220 door leaf left hand, without screws	Left	No, door leaf only	BZP
80967590057	3220 frame leaf right hand, without screws	Right	No, frame leaf only	BZP
80967690057	3220 frame leaf left hand, without screws	Left	No, frame leaf only	BZP
46055620057	249-7, 7mm adjustment discs for use with 3220 hinge	N/A	N/A	N/A

ASSA ABLOY
Opening Solutions

3228

Grade 13 journal supported, half leaf lift-off hinge, with a unique design that's ideal for applications where security and attack resistance are important.

Features and benefits

- Grade 13 hinge, supports door weight up to 120kg
- Hardened steel pins reduce wear and increase life cycle
- Half leaf design reduces mortice preparation required for fitting
- Sold as both leaves and separate leaves, with or without screws

Classification code

4 (1-4) | 7 (3/4/7) | 6 (0-7) | 1 (0/1) | 1 (1) | 3 (0-4) | 1 (0/1) | 13 (1-14)

EN 1935:2002

UKCA CE 2 YEAR GUARANTEE GRADE 13 120 kg MAX WEIGHT EPD®

Testing and certification

UKCA / CE marked	Yes
Certified in compliance with	EN 1935 (grade 13 severe duty)
Suitable for fire doors	Suitable for timber and metal doors where a melting point higher than 800°C is required
Certifire approval	No
Guarantee	2 years

Specification

Maximum door weight	120kg
Tested to	200,000 cycles
Dimension (H x W x D)	110 x 98 x 3mm
Finishes	BZP
Material	CS4 grade rolled mild steel
Handing	Left or right
Minimum door thickness	3mm
Screws	Supplied with or without 3.5 x 12mm wood screws

Dimensions

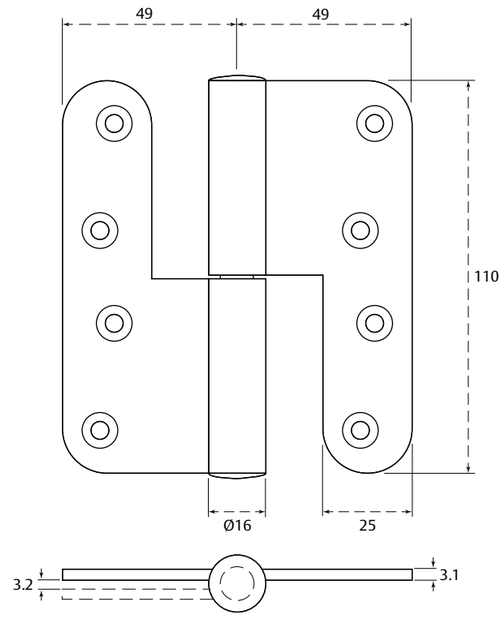

How to order

Order code	Description	Handing	Full hinge	Finish
80967710357	3228 door and frame leaves, right hand with screws	Right	Yes	BZP
80967710557	3228 door and frame leaves, left hand with screws	Left	Yes	BZP
80967890057	3228 door leaf right hand, without screws	Right	No, door leaf only	BZP
80967990057	3228 door leaf left hand, without screws	Left	No, door leaf only	BZP
80968090057	3228 frame leaf right hand, without screws	Right	No, frame leaf only	BZP
80968190057	3228 frame leaf left hand, without screws	Left	No, frame leaf only	BZP
46055720057	249-8, 8mm adjustment discs for use with 3228 hinge	N/A	N/A	N/A

ASSA ABLOY
Opening Solutions

3248

Grade 13 journal supported, full leaf lift-off hinge, with a unique design that's ideal for applications where security and attack resistance are important.

Features and benefits

- Unique method of securing the pins so they can't be driven out, which increases security and resistance to attack
- Hardened steel pins reduce wear and increase life cycle
- Full leaf design allows for symmetrical routing and appearance
- Sold as both leaves and separate leaves, with or without screws

Classification code

4 (1-4) | 7 (3/4/7) | 6 (0-7) | 1 (0/1) | 1 (1) | 3 (0-4) | 1 (0/1) | 13 (1-14)

UKCA CE 2 YEAR GUARANTEE 120 kg MAX WEIGHT GRADE 13

EN 1935:2002

Testing and certification

UKCA / CE marked	Yes
Certified in compliance with	EN 1935 (grade 13 severe duty)
Suitable for fire doors	Suitable for timber and metal doors where a melting point higher than 800°C is required
Certifire approval	No
Guarantee	2 years

Specification

Maximum door weight	120kg
Tested to	200,000 cycles
Dimension (H x W x D)	110 x 98 x 2mm
Finishes	BZP
Material	CS4 grade rolled mild steel
Handing	Left or right
Minimum door thickness	36mm
Screws	Supplied with or without 3.5 x 12mm wood screws

Dimensions

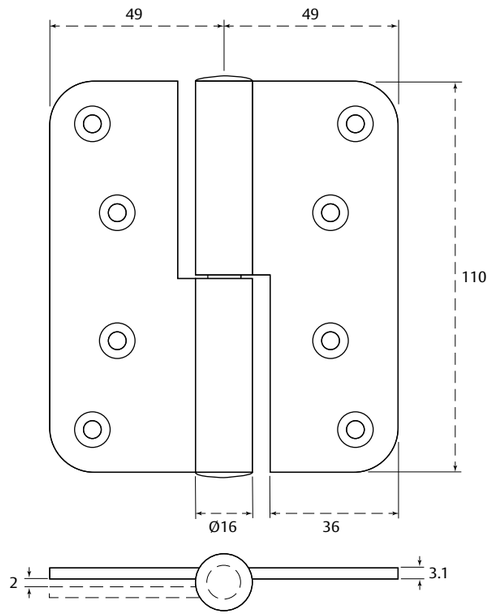

How to order

Order code	Description	Handing	Full hinge	Finish
46886710357	3248 right hand hinge 2mm, with screws	Right	Yes	BZP
46886710557	3248 left hand hinge 2mm, with screws	Left	Yes	BZP
46886890057	3248 frame leaf right hand 2mm, without screws	Right	No, frame leaf only	BZP
46887090057	3248 frame leaf left hand 2mm, without screws	Left	No, frame leaf only	BZP
46886990057	3248 door leaf right hand 2mm, without screws	Right	No, door leaf only	BZP
46887190057	3248 door leaf left hand 2mm, without screws	Left	No, door leaf only	BZP

ASSA ABLOY
Opening Solutions

3278

Grade 14 journal supported, half leaf, lift-off hinge supports door weight up to 160kg.

Features and benefits

- Heavy duty grade 14 hinge for doors up 160kg
- Ideal for applications where security and attack resistance is important
- Half leaf design reduces mortice preparation required for fitting
- Identical dimensions to the 3228, except the thickness is increased to 3.7mm
- Unique method of securing the pins so they can't be driven out, which increases security and resistance to attack
- Hardened steel pins reduce wear and increase life cycle

Classification code

4 (1-4) | 7 (3/4/7) | 7 (0-7) | 1 (0/1) | 1 (1) | 4 (0-4) | 1 (0/1) | 14 (1-14)

EN 1935:2002

UK CA CE 2 YEAR GUARANTEE 160 kg MAX WEIGHT GRADE 14 EPD®

Testing and certification

UKCA / CE marked	Yes
Certified in compliance with	EN 1935 (grade 14 severe duty)
Suitable for fire doors	Suitable for timber and metal doors where a melting point higher than 800°C is required
Certifire approval	No
Guarantee	2 years

Specification

Maximum door weight	160kg
Tested to	200,000 cycles
Dimension (H x W x D)	110 x 98 x 32mm
Finishes	BZP
Material	CS4 grade rolled mild steel
Handing	Left or right
Minimum door thickness	28mm
Screws	Supplied with 5 x 12mm wood screws

Dimensions

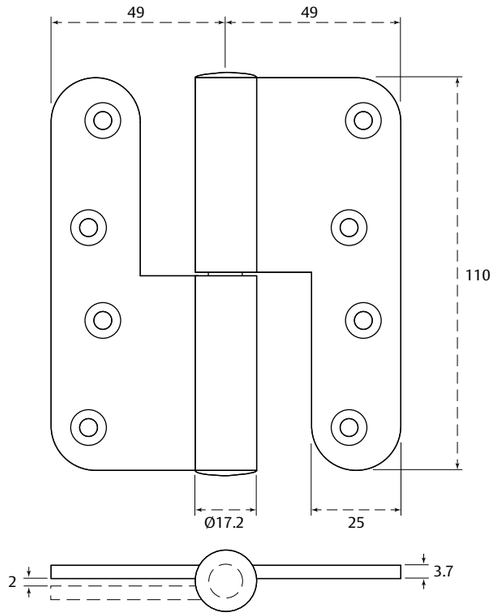

How to order

Order code	Description	Handing	Full hinge	Finish
807359163058	3278 right hand hinge, with screws	Right	Yes	BZP
807359165058	3278 left hand hinge, with screws	Left	Yes	BZP

ASSA ABLOY
Opening Solutions

3288

Grade 14 journal supported, full leaf, lift-off hinge supports door weight up to 160kg.

Features and benefits

- Grade 14 full leaf hinge
- Ideal for applications where security and attack resistance are important
- Unique method of securing the pins so they can't be driven out, which increases security and resistance to attack
- Hardened steel pins reduce wear and increase life cycle
- Full leaf design allows for symmetrical routing and appearance

Classification code

4	7	7	1	1	3	1	14
(1-4)	(3/4/7)	(0-7)	(0/1)	(1)	(0-4)	(0/1)	(1-14)

EN 1935:2002

Testing and certification

UKCA / CE marked	Yes
Certified in compliance with	EN 1935:2002 (grade 14 severe duty)
Suitable for fire doors	Suitable for timber and metal doors where a melting point higher than 800° C is required
Certifire approval	No
Guarantee	2 years

Specification

Maximum door weight	160kg
Tested to	200,000 cycles
Dimension (H x W x D)	110 x 98 x 2mm
Finishes	BZP
Material	CS4 grade rolled mild steel
Handing	Left or right
Minimum door thickness	36mm
Screws	Supplied with 3.5 x 12mm wood screws

Dimensions

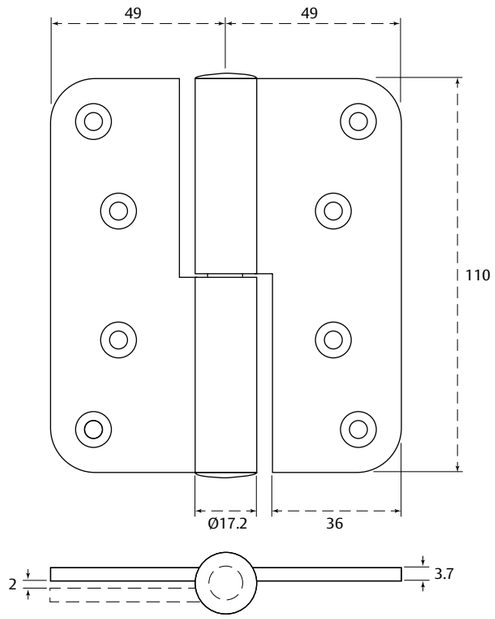

How to order

Order code	Description	Handing	Full hinge	Finish
80797310357	3288 right hand hinge, with screws	Right	Yes	BZP
80797310557	3288 left hand hinge, with screws	Left	Yes	BZP

Specialist hinges

We offer a range of hinges for specialist applications where doorset aesthetics and security require additional consideration. These vary from slim knuckle hinges for thinner fire doors to high security hinges to concealed hinges for a completely flush finish.

Range benefits

- Slim knuckle hinges: designed to offer a more slender, aesthetically pleasing profile on thinner fire doors and in more minimal, modern environments
- Security hinges: ideal for use on security or external doors in high use public areas, to prevent door removal if the hinge is attacked
- Concealed hinges: allows hinges in non-rebated doors to be completely flush and therefore integrated into rooms designed with straight lines

ASSA ABLOY
Opening Solutions

CE13 slim knuckle hinge

CE13 slim knuckle hinge offers a more slender profile for residential and commercial specification where aesthetics are important.

Features and benefits

- Thinner knuckle allows for a sleek door profile for great aesthetics
- Suitable for larger fire doors up to 120kg
- Made from high quality durable steel
- Unique barrel design
- Meets EN 1935 with thinner knuckle and profile

Classification code

4 (1-4) | 7 (3/4/7) | 6 (0-7) | 1 (0/1) | 1 (1) | 4 (0-4) | 0 (0/1) | 13 (1-14)

EN 1935:2002

UKCA CE 1 YEAR GUARANTEE 120 kg MAX WEIGHT GRADE 13 certifire

Testing and certification

UKCA / CE marked	Yes
Certified in compliance with	EN 1935 (grade 13 severe duty)
Suitable for fire doors	Timber FD30/FD60. Intumescent protection must be used.
Certifire approval	Yes
Guarantee	1 year

Specification

Maximum door weight	120kg
Tested to	200,000 cycles
Dimension (H x W x D)	102 x 67 x 2.5mm
Finishes	SSS, PSS
Material	201 stainless steel
Handing	Non-handed
Minimum door thickness	40mm
Screws	5mm x 32mm twin thread hardened pozi wood screw

Dimensions

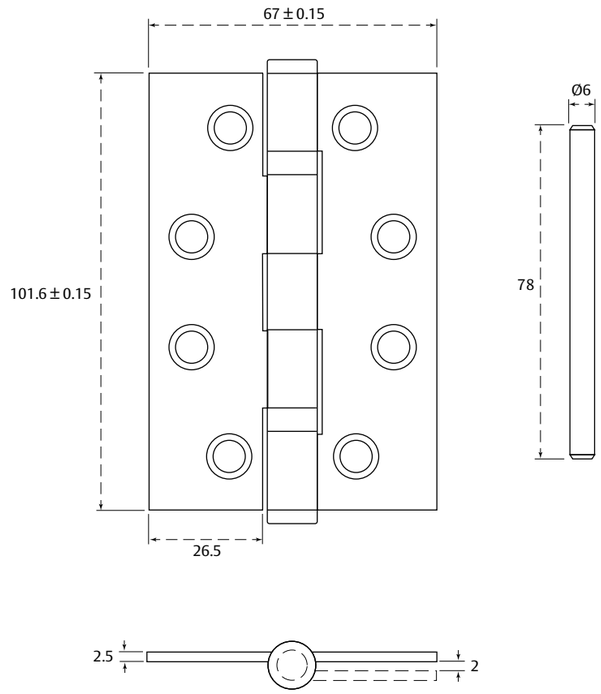

How to order

Order code	Description	Finish
XL830	CE13 slim knuckle bearing hinge (pair)	SSS
XL831	CE13 slim knuckle bearing hinge (pair)	PSS

ASSA ABLOY
Opening Solutions

CE13 security hinge

CE13 security hinge includes an additional security peg (dog bolt) that locks into place when the hinge is closed which prevents the removal of the door leaf if hinge knuckle is attacked.

Features and benefits

- Suitable for both standard and fire doors in commercial or residential environments with additional security requirements
- Suitable for larger doors up to 120kg
- Ball bearing knuckle provides doors with a smooth operation
- Made from high quality durable steel

Classification code

4 (1-4) | 7 (3/4/7) | 6 (0-7) | 1 (0/1) | 1 (1) | 4 (0-4) | 0 (0/1) | 13 (1-14)

EN 1935:2002

UK CA CE | 1 YEAR GUARANTEE | 120 kg MAX WEIGHT | GRADE 13 certifire

Testing and certification

UKCA / CE marked	Yes
Certified in compliance with	EN 1935 (grade 13 severe duty)
Suitable for fire doors	Timber FD30/FD60. Intumescent protection must be used.
Certifire approval	Yes
Guarantee	1 year

Specification

Maximum door weight	120kg
Tested to	200,000 cycles
Dimension (H x W x D)	102 x 76 x 3mm
Finishes	SSS
Material	201 stainless steel
Handing	Non-handed
Minimum door thickness	40mm
Screws	5mm x 32mm twin thread hardened pozi wood screw

Dimensions

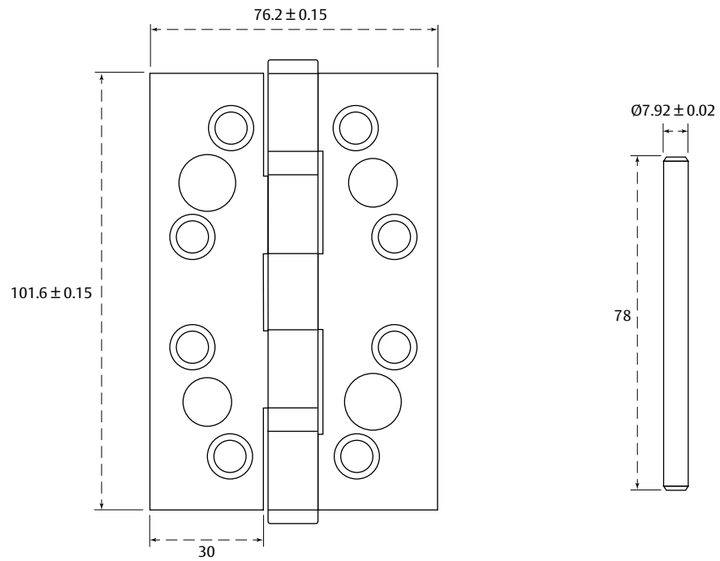

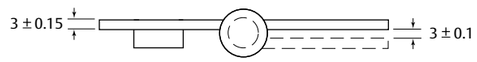

How to order

Order code	Description	Finish
XL835-SEC	CE13 ball bearing security hinge (pair)	SSS

ASSA ABLOY
Opening Solutions

OTLAV concealed hinge

UNION concealed hinge which enables unrebated doors to fit completely flush and integrate into a rooms design with straight lines.

Features and benefits

- Stylish, durable and low maintenance solution for commercial and residential premises
- Multiple junction fulcrums with heavy bearings offer low maintenance and a long life, with a smooth silent operation
- Seven pivot fulcrum with patented interlocking fingers that deliver consistent support for doors
- Adjustable three ways; horizontal, vertical and depth to ensure the best fit and easy access for maintenance
- Easy to height adjust using a 4mm hex key
- Can be used in conjunction with door closers
- Tested and UKCA / CE marked to unique standard as exempt from EN 1935 due to multi-axis design

Classification code

4 (1-4) | 7 (3/4/7) | 6 (0-7) | 1 (0/1) | 1 (1) | 4 (0-4) | 1 (0/1) | 13 (1-14)

UK CA CE 120 kg MAX WEIGHT GRADE 13 10 YEAR GUARANTEE

EAD-020001-00-0405, EN 1634-1

Testing and certification

UKCA / CE marked	Yes
Certified in compliance with	EAD-020001-00-0405, EN 1634-1
Suitable for fire doors	Timber FD90
Certifire approval	No
Guarantee	10 years

Specification

Maximum door weight	120kg
Tested to	200,000 cycles
Dimension (H x W x D)	190 x 31 x 35mm
Finishes	SIL, SN, PC, PB, MBLK, MWH, NP
Material	Zamack
Handing	Non handed
Minimum door thickness	31mm
Opening angle	180 degrees
Screws	M3 x 6mm countersunk stainless steel

Dimensions

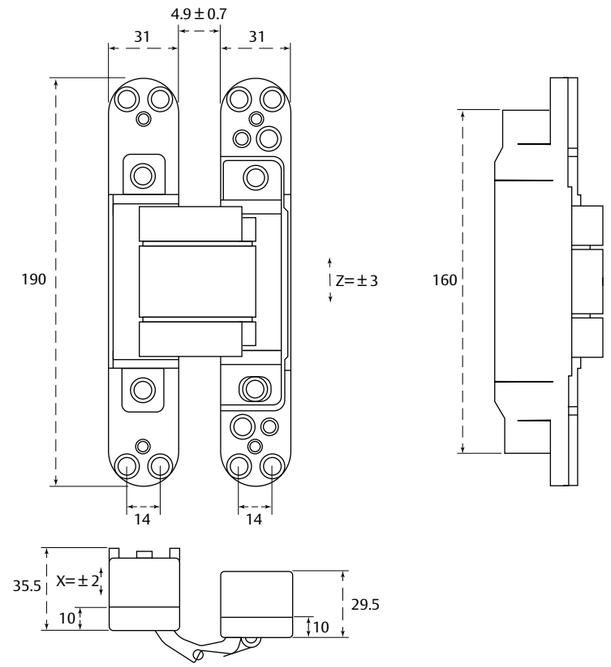

How to order

Order code	Description	Finish
J-C7.5-3-35-R-1-SIL	OTLAV adjustable concealed hinge	SIL
J-C7.5-3-35-R-1-NP	OTLAV adjustable concealed hinge	NP
J-C7.5-3-35-R-1-MB	OTLAV adjustable concealed hinge	MBLK
J-C7.5-3-35-R-1-MW	OTLAV adjustable concealed hinge	MWH
J-C7.5-3-35-R-1-CP	OTLAV adjustable concealed hinge	PCP
J-C7.5-3-35-R-1-PG	OTLAV adjustable concealed hinge	PB

Lockcases

Introduction	346
Legislation	355
Product selector	360
UK lockcases	369
DIN lockcases	407
Scandinavian lockcases	435
Narrow profile lockcases	483
CE latches and bolts	495
Accessories	503

Lockcases

Lockcases are mortice locks that fit into a pocket cut into the edge of the door. The body of the lock houses the internal components which, when operated, control the latch and deadbolt. These locks can be driven either by a lever mechanism or by a cylinder.

With a large selection of lock types our range includes functions such as sashlocks, deadlocks, latches, bathroom locks, nightlatches, escape sashlocks, and more, to suit all applications. We also offer a variety of sizes to suit UK style, DIN or Scandinavian, as well as both square and radius faceplates.

Our lockcases are rigorously tested in accordance with EN 12209 or BS 3621 to ensure they are robust and fire tested to EN 1634-1 in timber and metal door configurations to stop the spread of fire and smoke in a building.

Designed for safety and security our high quality lockcases are built to last.

Key features

- Durability and security tested in accordance with EN 12209 and BS 3621
- Fire tested in accordance with EN 1634-1 and Certifire
- A variety of functions available to suit all applications
- Cylinder locks can be added to your existing master key systems
- Modular cases across our ranges allow rapid door preparation and installation, which can also be swapped out if a door requirement changes
- Most lockcases are easily reversible

Parts of a lockcase

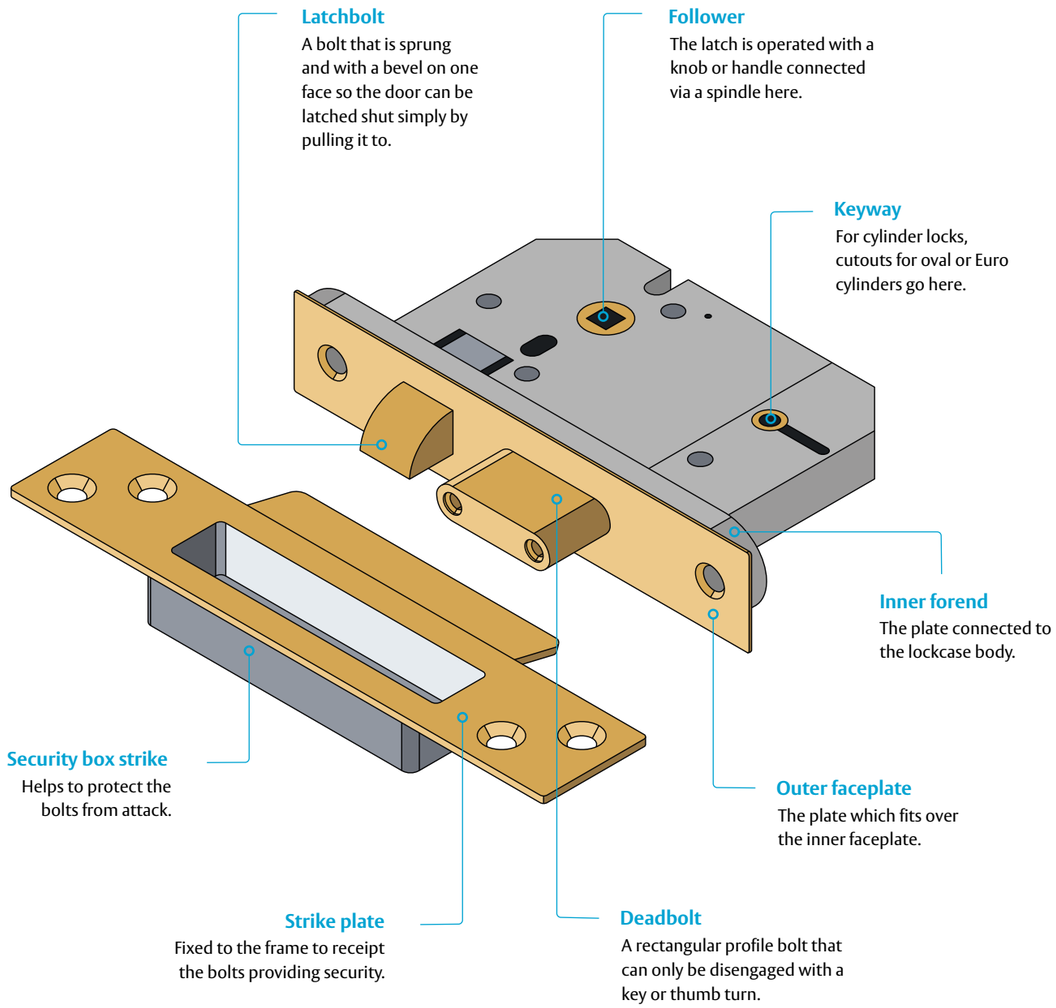

Strike plates

The strike plate is a metal plate that is fitted to the door frame. Once the door is closed, the door latch and/or deadbolt extends into the strike plate holes(s) which helps to keep it locked tight as well as protecting the door frame from damage.

When the lock has a latch mechanism the strike plate will typically have a lip. The lip assists the latch in retracting as it comes into contact with the strike plate during the closing motion of the door.

Higher security locks can be supplied with a security box strike. This includes a flat strike plate with a box attached to the back to provide additional security as well as ensuring no debris gets inside the lockcase.

A splinter guard is another accessory, which works like a box strike, but is not attached to the strike plate. This will ensure no debris gets inside the lockcase, however it does not offer additional security.

Flat strike plate

Flat strike plate with lip

Security box strike

Splinter guard

Considerations for selecting the right lockcase

Choose the right type of lockcase

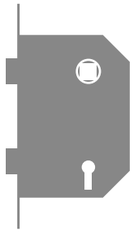

Sashlock

Mortice sashlocks have a bolt as well as a latch. The bolt can be opened from either side with a key or thumb turn, whilst the latch can be opened from either side using a pair of handles.

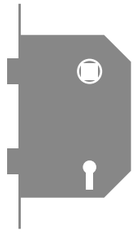

Escape sashlock

Provides single action egress from the inside without the need to use a key.

Deadlock

Mortice deadlocks just have a bolt, which can be opened from either side with a key or thumb turn.

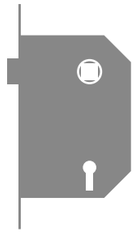

Nightlatch

The latch is operated by the cylinder.

Bathroom lock

Bathroom locks have a latch which is operated by a pair of handles and a bolt which is operated by a thumb turn or handle from the bathroom side.

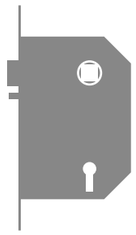

Deadlocking nightlatch

The auxiliary snib deadlocks the latch when it is depressed by the strike plate in the closed position.

Latch

Latches are operated by a pair of handles when the door is closed.

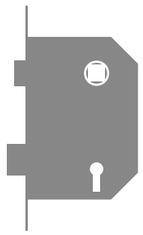

Rollerbolt / rollerlatch

A rollerbolt or rollerlatch allows the door to operate in both inward and outward directions or openings.

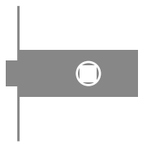

Tubular latch

Latches are operated by a pair of handles used when no security is required.

What security level is needed?

Lockcases can offer different levels of security suitable for internal and external doors. Depending on your requirement, lockcases can be rigorously tested for durability, strength, function and security.

BS 3621 specifies performance requirements and test methods for a thief resistant mechanically operated single-point lock assembly, whilst incorporating EN 12209 field of door application, i.e. a lock that can be locked from both sides with a key, thereby only allowing key egress.

These lockcases also undertake:

- Attack testing against drills (drill attack test to enable the levers to be manipulated)
- Pick (minimum of 1000 key combinations and general vulnerability assessments)
- Attack (side and end load on security box strike and a minimum 20mm bolt throw)
- Saw (saw attack on the deadbolt)

Once passed, the product will display a Kitemark logo.

Lockcases conforming to EN 12209 undertake rigorous testing including category of use, durability, security and drill resistance etc. This standard covers requirements and test methods for all types of mechanical locks or latches (including associated or separately supplied strike plates), intended for use on pedestrian doors in buildings.

CE marking is applicable only to those products where the BS or EN standard has been harmonised under the Construction Products Regulation. A lockcase can only be described as high security when it has a CE Mark.

What safety level is required?

Safety is one of the most crucial requirements when choosing a lockcase. Some applications do not require a safety feature however if the door is part of an escape / fire route, then you need to ensure that you have means of escape with a single action.

EN 179 covers push pads and lever handles which can be used in areas, where members of the public do not have access, such as offices or factories.

Another consideration is fire safety. Not only is there a requirement for the lockcase to pass a fire test in either metal or timber doors for a particular amount of time, but also to remain latched / closed – essentially providing a barrier.

Select the right size lockcase

To help you select the correct mortice lock, the following is a basic guide to the key measurements and dimensions.

1 Case size

Distance from the front of the outer faceplate to the back of the case.

2 Backset

Distance from the outer faceplate to the centre of the follower or keyhole. This measurement is important when replacing existing locks.

3 Centres

Distance between the centre of the follower and centre of the keyhole. This measurement is important for selection of door handles.

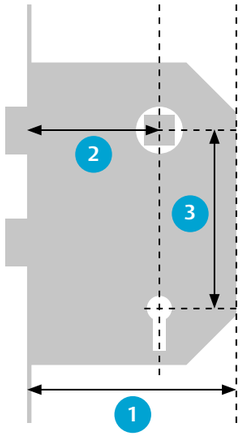

Handing

Although most locks are easily reversible without opening the lockcase, some require the handing to be stated when an order is placed.

Door handing can be complex so see below diagrams to help identify which hand is required.

Note that the handing of the door is always decided from the position of the hinge knuckles.

Scandinavian and narrow profile (timber) lockcases

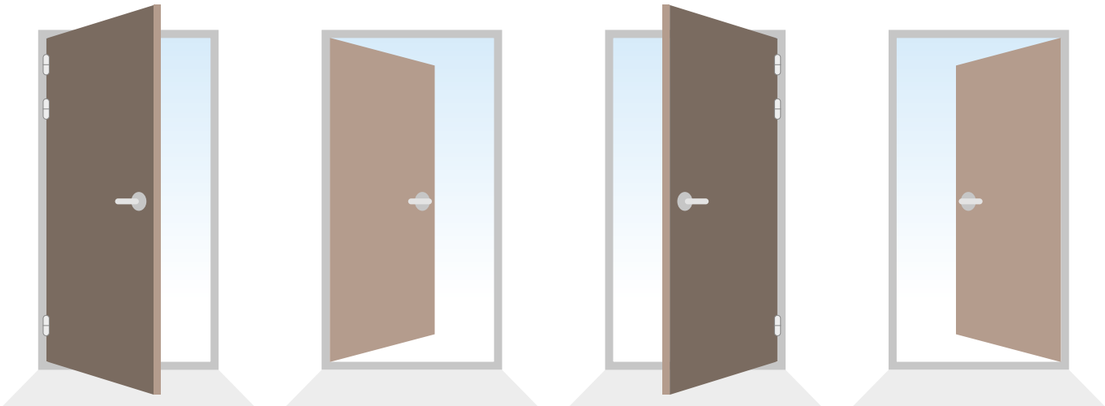

Left hand inward opening | Right hand outward opening | Right hand inward opening | Left hand outward opening

When specifying split follower locks, the direction of door opening must also be stated.

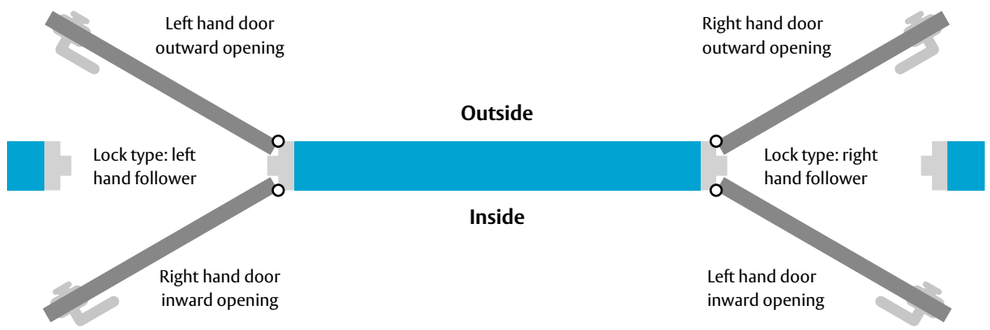

UK lockcases / DIN lockcases

Single doors inward opening

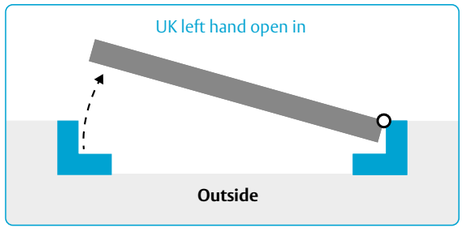

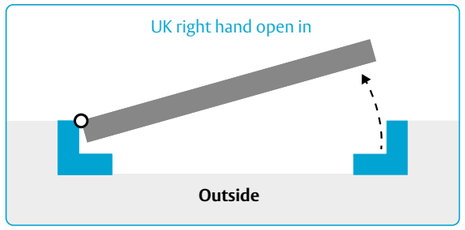

Single doors outward opening

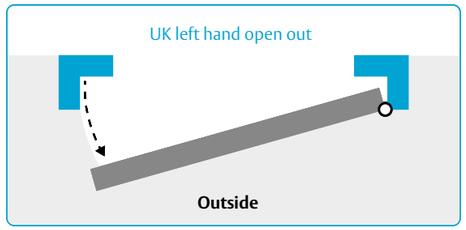

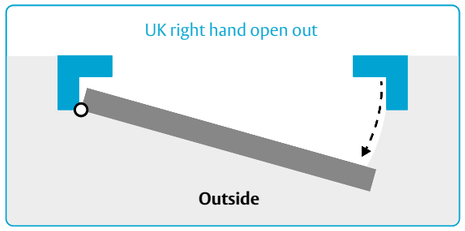

Narrow profile lockcases (aluminium door)

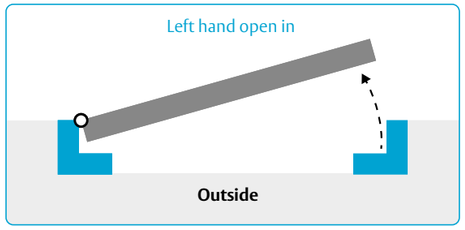

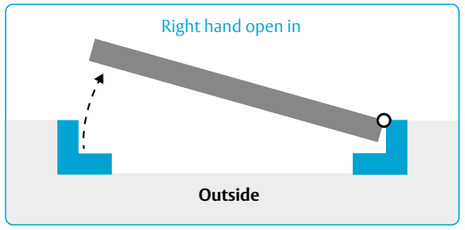

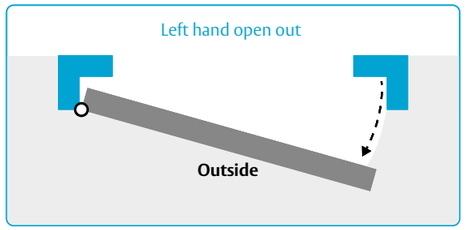

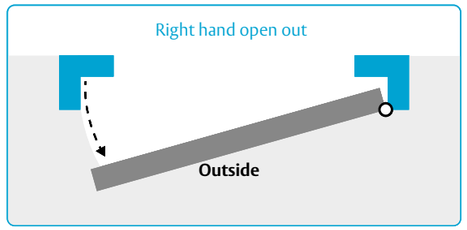

Is it a rebated doorset?

A rebate kit is an ironmongery accessory that is used to enable a lock or latch mechanism to be fitted correctly on a pair of double opening rebated doors.

The term 'rebated doors' is used to describe a set of two doors which have been cut, or rebated, into one another. To do this, half of the 'thickness' of the face of each door is channeled out, usually by 13mm, but also by 19mm or 25mm, so that when they close, the doors interlock into one another. This ensures a neat and solid fit when closed, and will help to prevent the two doors from warping away from each other after fitting.

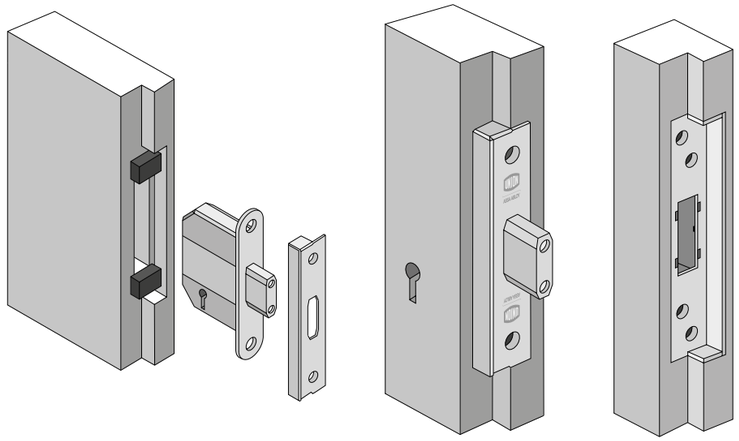

Lockcase profiles

UK lockcases

These are the standard profile of lockcases traditionally used within the UK, featuring centres of 47.5mm (Euro profile), 48.5mm (oval profile) or 57mm (lever profile).

DIN lockcases

DIN style refers to Euro profile lockcase ranges that feature 72mm centres. The longer clearance between handle and keyway improves access for all.

Scandinavian lockcases

Scandinavian lockcases are similar to UK style lockcases however, the cylinder is located above the lever handles ensuring more space for using the cylinder. They accommodate a Scandinavian oval profile and feature 111mm centres.

Legislation

BS 3621 – Thief resistant lock assembly – key egress

BS 3621 requires security from both sides, meaning that, once locked, a key is always required to open the door, from the inside or the outside.

BS 3621 approval is denoted via Kitemark and applies to the lock and all supplied accessories; changing the keep or cylinder will invalidate the approval often required by insurance policies etc.

Where there is a greater need for safety concerns to be addressed, please refer to BS 8621, approved keyless egress, locks which are secure only from the outside.

EN 12209 – Locks and latches

Fundamental to this standard is a comprehensive classification system for assessing the wide range of products needed to satisfy the diverse requirements of the European market. Features assessed include normal use (and abuse) forces, long-term durability, fire/smoke resistance, corrosion and temperature resistance and security, both manipulative and physical. In addition, it contains information on marking, including CE marking because EN 12209:2003 is a harmonised standard.

Please be aware a 2016 version has been published, however, is not harmonised. It is CE marking to the 2003 revision that is a legal requirement for locks to be fitted to a fire door.

BS 8300-2:2018 – design of an accessible and inclusive built environment

BS 8300 considerations for lockcases include:

- The minimum distance from the door edge to the centre of the keyway (backset) should be 54mm
- The distance between the handle follower and the centre of the keyway (lock centres) should be a minimum of 72mm unless the keyway is positioned above the handle
- Lever handles should be used wherever possible in conjunction with an upright mortice lock/latch

More details on BS 8300 can be found in the Standards and legislation section.

Other important legislation

- EN 179 – Further information can be found in the introduction of the panic and emergency hardware section

Further legislation and certification information can be found in the Standards and legislation section

ASSA ABLOY
Opening Solutions

EN 12209 classification key

	EN 12209:2003 Grading scope
CATEGORY OF USE Defines the frequency of use of the product. **Grade 1:** for use by people with a high incentive to exercise care and with a small chance of misuse, e.g. residential doors **Grade 2:** for use by people with some incentive to exercise care but where there is some chance of misuse, e.g. office doors **Grade 3:** High frequency use by users with little incentive to treat hardware carefully and with a high chance of misuse e.g. public doors	(1-3)
DURABILITY Tests the durability of the product through various cycle tests where durability and load on latchbolt are identified.	(A-X)
DOOR MASS AND CLOSING FORCE Takes into account the mass of the door which the product can be reliably used on.	(1-9)
FIRE RESISTANCE Suitability of product use on fire/smoke door assemblies having successfully completed a fire test to EN 1634-1. **Grade 0:** Not approved for use on fire/smoke resisting door assemblies **Grade 1:** Suitable for use on fire/smoke resisting assemblies subject to satisfactory fire testing or assessment	(0-1)
SAFETY Categorises the level of safety for the product. **Grade 0:** No safety requirement	(0)
CORROSION RESISTANCE AND TEMPERATURE Level of corrosion resistance to EN 1670 Neutral Salt Spray test and operation of the product at extreme temperatures.	(0-G)

Durability

	Side load on latchbolt				
Cycle test	No load	10N	25N	50N	120N
50,000	Grade A	Grade F			
100,000	Grade B	Grade G	Grade L	Grade R	Grade W
200,00	Grade C	Grade H	Grade M	Grade S	Grade X

Door mass and closing force

	Maximum closing force		
Door mass	15N	25N	50N
up to 100kg	Grade 7	Grade 4	Grade 1
up to 200kg	Grade 8	Grade 5	Grade 2
Above 200kg	Grade 9	Grade 6	Grade 2

Corrosion resistance and temperature

Eight grades of corrosion resistance and temperature requirement are identified

Grade 0	No defined corrosion resistance; no temperature requirement
Grade A	Low corrosion resistance; no temperature requirement
Grade B	Moderate corrosion resistance; no temperature requirement
Grade C	High corrosion resistance; no temperature requirement
Grade D	Very high corrosion resistance; no temperature requirement
Grade E	Moderate corrosion resistance; temperature requirement: from –20°C to +80°C
Grade F	High corrosion resistance; temperature requirement: from –20°C to +80 °C
Grade G	Very high corrosion resistance; temperature requirement: from –20°C to +80°

ASSA ABLOY
Opening Solutions

EN 12209 classification key

	EN 12209:2003 Grading scope
SECURITY AND DRILL RESISTANCE Identifies seven security and drill resistance levels.	(1-7)
FIELD OF DOOR APPLICATION 15 grades of door application are identified.	(A-T)
TYPE OF KEY OPERATION Identifies nine the type of key operation and locking type. **Grade 0** - Not applicable **Grade A** - Cylinder lock or latch; manually locking **Grade B** - Cylinder lock or latch; automatically locking **Grade C** - Cylinder lock or latch; manually locking with intermediate locking **Grade D** - Lever lock or latch; manually locking **Grade E** - Lever lock or latch; automatically locking **Grade F** - Lever lock or latch; manually locking with intermediate locking **Grade G** - Lock or latch without key operation; manually locking **Grade H** - Lock without key operation; automatically locking	(0-H)
TYPE OF SPINDLE OPERATION Confirms the method of operation and compatible door furniture. **Grade 0** - Lock or latch without follower **Grade 1** - Lock or latch for knob or sprung lever handle operation **Grade 2** - Lock or latch for unsprung lever handle operation **Grade 3** - Lock or latch for heavy duty unsprung lever handle operation **Grade 4** - Lock or latch for heavy duty unsprung lever handle operation specified by the manufacturer	(0-4)
KEY IDENTIFICATION REQUIREMENT Number of detaining elements and effective differs.	(0-H)

Security and drill resistance

Drill resistance	Security				
	Minimum	Low	Medium	High	Very high
No DR	Grade 1	Grade 2	Grade 3	Grade 4	Grade 6
With DR				Grade 5	Grade 7

Field of door application

Grade	Type	Door	Forend supported see figure B.1b	Egress control by key
A	Mortice	Unrestricted (hinge & sliding)	No	
B	Mortice	Hinged	No	
C	Mortice	Sliding	No	
D	Rim	Unrestricted (hinge & sliding)	No	
E	Rim	Hinged	No	
F	Rim	Sliding	No	
H	Mortice	Hinged	Yes	
J	Rim	Hinged (Inward opening only)	No	
K	Mortice	Hinged	No	Yes
L	Mortice	Sliding	No	Yes
M	Rim	Hinged	No	Yes
N	Rim	Sliding	No	Yes
P	Mortice	Hinged	Yes	Yes
R	Rim	Hinged (Inward opening only)	No	Yes
S	Mortice	Unrestricted (hinge & sliding)	No	Yes
T	Rim	Unrestricted (hinge & sliding)	No	Yes

Key identification requirement

Nine grades are identified from 0 to H

Grade 0	No requirements
Grade A	Minimum three detaining elements
Grade B	Minimum five detaining elements
Grade C	Minimum five detaining elements, extended number of effective differs
Grade D	Minimum six detaining elements
Grade E	Minimum six detaining elements, extended number of effective differs
Grade F	Minimum seven detaining elements
Grade G	Minimum seven detaining g elements, extended number of effective differs
Grade H	Minimum eight detaining elements, extended number of effective differs

ASSA ABLOY
Opening Solutions

Product selector

		UK lockcases								UK lockcases										
		BS 3621		StrongBOLT						Dual profile compact										
		222441E	212441E	Euro sashlock	Euro deadlock	Oval sashlock	Oval deadlock	Bathroom lock		3065	3088	3098	3055T	3084	3085	3061	3062	3059	3020	3069
Lock functions	Sashlock	●		●		●				●										
	Deadlock		●		●		●				●									
	Latch											●								
	Nightlatch (including deadlocking, double and triple locking)													●	●					
	Escape (including nightlatch, double nightlatch and sashlock)															●	●	●	●	●
	Hookbolt																			
	Roller latch / roller and deadbolt																			
	Bathroom lock							●					●							
	Deadlatch																			
	Tubular latch																			
	Tubular bolt																			
Locking mechanism	Lever pack (2, 3 or 5 lever)																			
	Follower												●							
	Euro profile cylinder									●	●			●	●	●	●	●	●	●
	Oval profile cylinder									●	●			●	●	●	●	●	●	●
	Scandinavian cylinder (round or oval)		●	●																
	US round screw-in cylinder	●	●	●	●	●														
Dim	Backset	45/57.5	45/57.5	45/57.5	45/57.5	45/57.5	45/57.5	45/57.5		57	57	57	57	57	57	57	57	57	57	57
	Centres	47.5		47.5		48.5		57		48.5		48.5	48.5	48.5	48.5	48.5	48.5	48.5	48.5	48.5
Face-plate	Radius									●	●	●	●	●	●	●	●	●	●	●
	Square	●	●	●	●	●	●	●		●	●	●	●	●	●	●	●	●	●	●
Certification	UKCA / CE marked	●	●	●	●	●	●	●												
	EN 12209	●	●	●	●	●	●	●												
	BS 3621 Kitemarked	●	●																	
	EN 179 emergency escape																			
	Secured by Design approved	●	●																	
	Certifire			●	●	●	●	●												
Fire rating	Timber FD30	●	●	●	●	●	●	●												
	Timber FD60	●	●	●	●	●	●	●												
	Timber FD90																			
	Timber FD120																			
	Metal FD120																			
	Metal FD240																			

ASSA ABLOY
Opening Solutions

Product selector

		DIN lockcases								DIN lockcases					
		400 series								HD72					
		03472 sashlock	03472 latch	03472 deadlock	03472 nightlatch	03472 bathroom	03472 escape sashlock	03472 roller lock		HD72SL	HD72DL	HD72LA	HD72WC	HD72DNL	HD72ESL
Lock functions	Sashlock	●								●					
	Deadlock			●							●				
	Latch		●									●			
	Nightlatch (including deadlocking, double and triple locking)				●									●	
	Escape (including nightlatch, double nightlatch and sashlock)						●								●
	Hookbolt														
	Roller latch / roller and deadbolt							●							
	Bathroom lock												●		
	Deadlatch														
	Tubular latch														
	Tubular bolt					●									
Locking mechanism	Lever pack (2, 3 or 5 lever)														
	Follower					●							●		
	Euro profile cylinder	●		●	●		●	●		●	●			●	●
	Oval profile cylinder														
	Scandinavian cylinder (round or oval)														
	US round screw-in cylinder														
Dim	Backset	55/60	55/60	55/60	55/60	55/60	55/60	55/60		60	60	60	60	60	60
	Centres	72	72		72	78	72	72		72			78	72	72
Face-plate	Radius	●	●	●	●	●	●	●		●	●	●	●	●	●
	Square	●	●	●	●	●	●	●		●	●	●	●	●	
Certification	UKCA / CE marked	●	●	●	●					●	●	●	●	●	●
	EN 12209	●	●	●	●					●	●	●	●	●	●
	BS 3621 Kitemarked														
	EN 179 emergency escape														●
	Secured by Design approved														
	Certifire									●	●	●	●	●	●
Fire rating	Timber FD30	●	●	●	●					●	●	●	●	●	●
	Timber FD60	●	●	●	●					●	●	●	●	●	●
	Timber FD90	●	●	●	●										
	Timber FD120	●	●	●	●										
	Metal FD120														
	Metal FD240	●	●	●	●					●	●	●	●	●	●

ASSA ABLOY
Opening Solutions

Product selector

		Scandinavian lockcases										Scandinavian lockcases													
		Modular										Modular													
		565	8765	2000	1498	2588	9788	6585	5584	6580		5565	1560	560	562	8561	8560	8562	8564	500/9	500/4	566	1520	2587	9787
Lock functions	Sashlock	●	●	●								●													
	Deadlock					●	●																		
	Latch				●																				
	Nightlatch (including deadlocking, double and triple locking)							●	●	●			●	●	●										
	Escape (including nightlatch, double nightlatch and sashlock)															●	●	●	●	●	●		●		
	Hookbolt																							●	●
	Roller latch / roller and deadbolt																					●			
	Bathroom lock																								
	Deadlatch																								
	Tubular latch																								
	Tubular bolt																								
Locking mechanism	Lever pack (2, 3 or 5 lever)																								
	Follower																								
	Euro profile cylinder																								
	Oval profile cylinder																								
	Scandinavian cylinder (round or oval)	●	●	●		●	●	●	●	●		●	●	●	●	●	●	●	●	●	●	●	●	●	●
	US round screw-in cylinder																								
Dim	Backset	50/70	50/70	50	50/70	50/70	50/70	50/70	50	50/70		50	50/70	50/70	50/70	50/70	50/70	50/70	50/70	50/70	50	50/70	50/70	50	50
	Centres	111	111	111	N/A	N/A	N/A	111	111	111		111	111	111	111	111	111	111	111	111	111	111	111	N/A	N/A
Face-plate	Radius	●	●	●	●	●	●	●	●	●		●	●	●	●	●	●	●	●	●	●	●	●	●	●
	Square																								
Certification	UKCA / CE marked	●	●	●	●	●	●	●					●	●	●	●	●			●	●		●	●	●
	EN 12209	●	●	●	●	●	●	●	●	●			●	●	●	●	●	●	●	●	●	●	●	●	●
	BS 3621 Kitemarked																								
	EN 179 emergency escape																								
	Secured by Design approved																								
	Certifire																								
Fire rating	Timber FD30	●	●	●	●	●	●	●					●	●	●	●	●			●	●		●	●	●
	Timber FD60	●	●	●	●	●	●	●					●	●	●	●	●			●	●		●	●	●
	Timber FD90																								
	Timber FD120																								
	Metal FD120	●	●	●	●	●	●	●					●	●	●	●				●	●		●	●	●
	Metal FD240																								

Product selector

		Narrow profile lockcases					CE latches and bolts		
		Aluminium				Timber			
		4710	4750	2200	Sentinel 6	13787	CE Smart-Latch	CE Smart-Bolt	HD26
Lock functions	Sashlock								
	Deadlock								
	Latch								
	Nightlatch (including deadlocking, double and triple locking)								
	Escape (inc. nightlatch, double nightlatch and sashlock)								
	Hookbolt			●	●	●			
	Roller latch / roller and deadbolt								
	Bathroom lock								
	Deadlatch	●	●						
	Tubular latch						●		●
	Tubular bolt							●	
Locking mechanism	Lever pack (2, 3 or 5 lever)								
	Follower							●	
	Euro profile cylinder		●	●	●				
	Oval profile cylinder								
	Scandinavian cylinder (round or oval)					●			
	US round screw-in cylinder	●							
Dim	Backset	22.2/24.6 28.6/38.1	24/28/37	25/30/40	25/30/40	28	57	57	45/57
	Centres	N/A	N/A	N/A	N/A	N/A	N/A	N/A	N/A
Face-plate	Radius					●	●	●	●
	Square	●	●	●	●				●
Certification	UKCA / CE marked					●	●	●	●
	EN 12209					●	●	●	●
	BS 3621 Kitemarked								
	EN 179 emergency escape	●	●						
	Secured by Design approved								
	Certifire						●	●	
Fire rating	Timber FD30						●	●	●
	Timber FD60						●	●	●
	Timber FD90								
	Timber FD120								
	Metal FD120					●			
	Metal FD240								

UK lockcases

The standard profile traditionally used within the UK can be supplied with either lever or cylinder mechanisms. Lever locks can have 2, 3 or 5 levers, depending on application and level of security required. Cylinder locks are supplied without the cylinder as this is normally sold separately from the lockcase.

We offer three main ranges all with speciality features:

BS 3621:2007
A well-established product standard for thief-resistant locks in the UK. Insurance companies specify that security locks are to be tested to this standard to comply with the requirements of insurance cover.

StrongBOLT
A unique chamfered bolt design, which increases the performance of the lock under side load attack. In addition, the hardened steel pins within the bolt construction provide resistance from sawing and the shape of the bolt also provides little opportunity for destructive tools to make positive contact.

Dual profile compact
Engineered for smooth performance over many years and offers a variety of different lock functionalities ideal for a range of environments, from entrance doors to offices, private houses, industrial premises and shops.

Range benefits

- Anti-pick qualities
- Easily reversible latch that uses the unique SwitchLatch technology for easy handing on site
- Hardened steel anti-drill plates on both sides of case (BS only)
- Suitable for unsprung lever handles

ASSA ABLOY
Opening Solutions

BS 3621 222441E Euro profile sashlock

British standard Euro profile mortice sashlock.

Features and benefits

- Extended 20mm deadbolt for secure positive deadlocking and additional resistance against attack
- Suitable for timber, steel and composite doors (special fixings required)
- Designed to accept bolt through fixings
- BS 3621:2007 accredited thief-resistant lock

Classification code

2	M	4	1	0	F	7	K	A	0	0
(1/3)	(A-X)	(1-9)	(0/1)	(0/1)	(0-G)	(1-7)	(ABU)	(0-H)	(0-4)	(0-H)

EN 12209:2003

BS 3621:2007

Testing and certification

UKCA / CE marked	Yes
Certified in compliance with	BS 3621 (if supplied complete with cylinder and security escutcheons), EN 12209, EN 1634-1
Suitable for fire doors	Timber FD30/FD60
Certifire approval	No
Guarantee	10 years

Specification

Inner forend	Square
Faceplate	Square
Lever furniture fixing points	Pierced to accept bolt through furniture and 53043 security rose
Reversible latch / handing	Yes
Angle of lever operation	N/A
Furniture	Unsprung lever handles
Cylinder compatibility	Euro profile (supplied with 222441E)
Backset	45, 57.5mm
Follower	8mm
Dimensions (D x H x W)	67/79.5 x 109 x 18mm
Centre distance	47.5mm
Deadbolt throw	20mm
Faceplate size	25.5mm
Latch and deadbolt finish	Latch – brass / Deadbolt – brass with hardened steel rollers
Case material finish	Steel, red powder coat
Faceplate and strike plate finish	SC, PB
Splinter guard	No
Supplied with	Lockcase, faceplate, security box strike, cylinder, 53043 security rose, fixings and 3 keys
Accessories	N/A

Dimensions

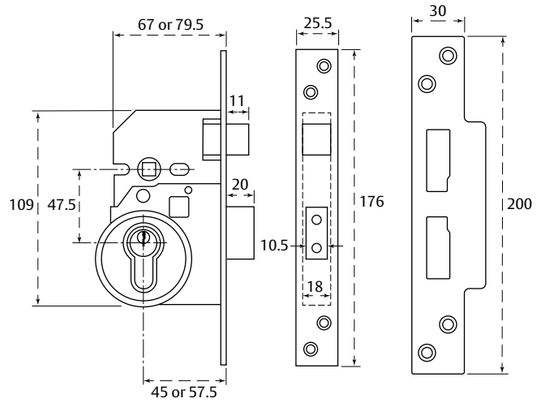

How to order

Order code	Description	Finish
J222441EPL-2.5B	BS Euro profile sashlock, 2.5" lockcase	PB
J222441EPL-3.0B	BS Euro profile sashlock, 3.0" lockcase	PB
J222441ESC-2.5B	BS Euro profile sashlock, 2.5" lockcase	SC
J222441ESC-3.0B	BS Euro profile sashlock, 3.0" lockcase	SC

ASSA ABLOY
Opening Solutions

BS 3621 212441E Euro profile deadlock

British standard Euro profile mortice deadlock.

Features and benefits

- Extended 20mm deadbolt for secure positive deadlocking and additional resistance against attack
- Suitable for doors up to 54mm thick
- Suitable for timber, steel and composite doors (special fixings required)
- BS 3621:2007 accredited thief-resistant lock

Classification code

2	M	4	1	0	F	7	K	A	0	0
(1/3)	(A-X)	(1-9)	(0/1)	(0/1)	(0-G)	(1-7)	(ABU)	(0-H)	(0-4)	(0-H)

EN 12209:2003

BS 3621:2007

Testing and certification

UKCA / CE marked	Yes
Certified in compliance with	BS 3621 (if supplied complete with cylinder and security escutcheons), EN 12209, EN 1634-1
Suitable for fire doors	Timber FD30/FD60
Certifire approval	No
Guarantee	10 years

Specification

Inner forend	Square
Faceplate	Square
Lever furniture fixing points	N/A
Reversible latch / handing	N/A
Angle of lever operation	N/A
Furniture	Push plate / pull handle
Cylinder compatibility	Euro profile (supplied with 212441E)
Backset	45, 57.5mm
Follower	N/A
Dimensions (D x H x W)	67/79.5 x 70 x 18mm
Centre distance	N/A
Deadbolt throw	20mm
Faceplate size	30mm
Latch and deadbolt finish	Latch – N/A Deadbolt – brass with hardened steel rollers
Case material finish	Steel, red powder coat
Faceplate and strike plate finish	SC, PB
Splinter guard	No
Supplied with	Lockcase, faceplate, security box strike, cylinder, 53043 security rose, fixings and 3 keys
Accessories	N/A

Dimensions

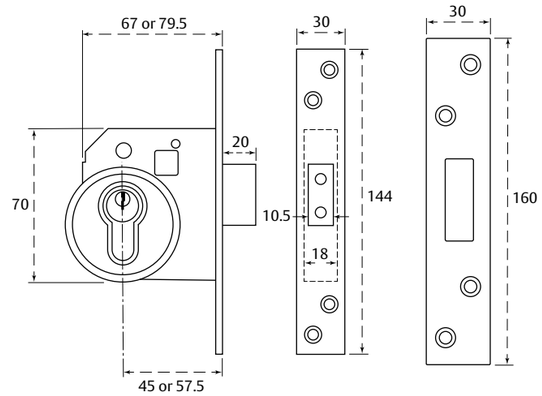

How to order

Order code	Description	Finish
J212441EPL-2.5B	BS Euro profile deadlock, 2.5" lockcase	PB
J212441EPL-3.0B	BS Euro profile deadlock, 3" lockcase	PB
J212441ESC-2.5B	BS Euro profile deadlock, 2.5" lockcase	SC
J212441ESC-3.0B	BS Euro profile deadlock, 3" lockcase	SC

ASSA ABLOY
Opening Solutions

StrongBOLT Euro profile sashlock

UK style Euro profile cylinder mortice sashlock.

Features and benefits

- Easily reversible radius latch that uses the unique SwitchLatch technology
- Anti-saw security features for resistance against attack
- Anti-rattle adjustable strike plate for on-site fine tuning
- Radius plastic splinter guard for easy installation and a professional finish
- Chamfered bolt design for increased performance against side load attack
- Standard UK profile easy for retrofitting

Classification code

2	M	4	1	0	F	2	B	A	2	0
(1/3)	(A-X)	(1-9)	(0/1)	(0/1)	(0-G)	(1-7)	(ABU)	(0-H)	(0-4)	(0-H)

EN 12209:2003

Testing and certification

UKCA / CE marked	Yes
Certified in compliance with	EN 12209, EN 1634-1
Suitable for fire doors	Timber FD30/FD60
Certifire approval	Yes
Guarantee	10 years

Specification

Inner forend	Radius
Faceplate	Square
Lever furniture fixing points	38mm
Reversible latch / handing	Yes
Angle of lever operation	N/A
Furniture	Unsprung lever handles
Cylinder compatibility	Euro profile - single, double or cylinder with thumb turn
Backset	45, 57mm
Follower	8mm
Dimensions (D x H x W)	68/81 x 109.6 x 15mm
Centre distance	47.5mm
Deadbolt throw	14mm
Faceplate size	26mm
Latch and deadbolt finish	Latch – zinc Deadbolt – zinc with hardened steel rollers
Case material finish	Steel, red powder coat
Faceplate and strike plate finish	SS, PB
Splinter guard	Yes
Supplied with	Lockcase, faceplate, strike plate, plastic splinter guard and fixings
Accessories	See lockcases accessories section for items such as intumescent kits and rebate kits

Dimensions

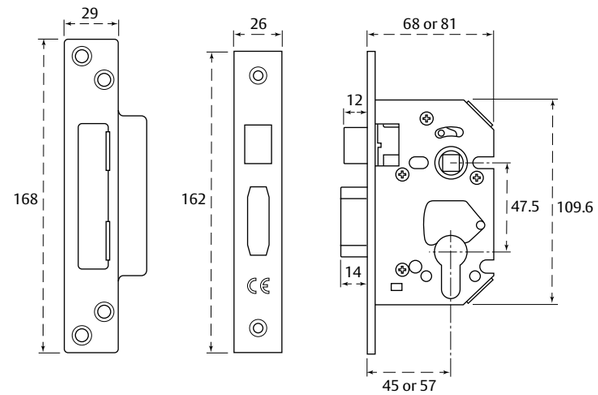

How to order

Order code	Description	Finish
JL22EUS-PB-2.5	StrongBOLT Euro profile sashlock, 2.5" lockcase (boxed)	PB
JL22EUS-PB-3.0	StrongBOLT Euro profile sashlock, 3.0" lockcase (boxed)	PB
JL22EUS-SS-2.5	StrongBOLT Euro profile sashlock, 2.5" lockcase (boxed)	SS
JL22EUS-SS-3.0	StrongBOLT Euro profile sashlock, 3.0" lockcase (boxed)	SS

ASSA ABLOY
Opening Solutions

StrongBOLT Euro profile deadlock

UK style Euro profile cylinder mortice deadlock.

Features and benefits

- Radius plastic splinter guard for easy installation and a professional finish
- Suitable for doors up to 54mm thick
- Chamfered bolt design for increased performance against side load attack
- Anti-saw features resistance for attack
- Anti-rattle adjustable strike plate for on-site tuning
- Standard UK profile easy for retrofitting

Classification code

2	M	4	1	0	F	2	B	A	0	0
(1/3)	(A-X)	(1-9)	(0/1)	(0/1)	(0-G)	(1-7)	(ABU)	(0-H)	(0-4)	(0-H)

EN 12209:2003

Testing and certification

UKCA / CE marked	Yes
Certified in compliance with	EN 12209, EN 1634-1
Suitable for fire doors	Timber FD30/FD60
Certifire approval	Yes
Guarantee	10 years

Specification

Inner forend	Radius
Faceplate	Square
Lever furniture fixing points	N/A
Reversible latch / handing	N/A
Angle of lever operation	N/A
Furniture	Push plate / pull handles
Cylinder compatibility	Euro profile - single, double or cylinder with thumb turn
Backset	45, 57mm
Follower	N/A
Dimensions (D x H x W)	68/81 x 89 x 15mm
Centre distance	N/A
Deadbolt throw	14mm
Faceplate size	26mm
Latch and deadbolt finish	Latch – N/A Deadbolt – zinc with hardened steel rollers
Case material finish	Steel, red powder coat
Faceplate and strike plate finish	SS, PB
Splinter guard	Yes
Supplied with	Lockcase, faceplate, strike plate, plastic splinter guard and fixings
Accessories	See lockcases accessories section for items such as intumescent kits and rebate kits

Dimensions

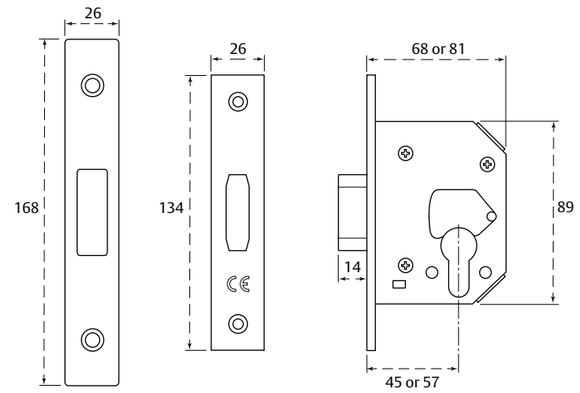

How to order

Order code	Description	Finish
JL21EUS-PB-2.5	StrongBOLT Euro profile deadlock, 2.5" lockcase (boxed)	PB
JL21EUS-PB-3.0	StrongBOLT Euro profile deadlock, 3.0" lockcase (boxed)	PB
JL21EUS-SS-2.5	StrongBOLT Euro profile deadlock, 2.5" lockcase (boxed)	SS
JL21EUS-SS-3.0	StrongBOLT Euro profile deadlock, 3.0" lockcase (boxed)	SS

ASSA ABLOY
Opening Solutions

StrongBOLT oval profile sashlock

UK style oval profile cylinder mortice sashlock.

Features and benefits

- Easily reversible radius latch that uses the unique SwitchLatch technology
- Anti-rattle adjustable strike plate for onsite fine tuning
- Radius plastic splinter guard for easy installation and a professional finish
- Chamfered bolt design for increased performance against side load attack
- Anti-saw features resistance for attack
- Standard UK profile easy for retrofitting

Classification code

2	M	4	1	0	F	1	B	A	2	0
(1/3)	(A-X)	(1-9)	(0/1)	(0/1)	(0-G)	(1-7)	(ABU)	(0-H)	(0-4)	(0-H)

EN 12209:2003

Testing and certification

UKCA / CE marked	Yes
Certified in compliance with	EN 12209, EN 1634-1
Suitable for fire doors	Timber FD30/FD60
Certifire approval	Yes
Guarantee	10 years

Specification

Inner forend	Radius
Faceplate	Square
Lever furniture fixing points	38mm
Reversible latch / handing	Yes
Angle of lever operation	N/A
Furniture	Unsprung lever handles
Cylinder compatibility	Oval profile - single, double or cylinder with thumb turn
Backset	45, 57mm
Follower	8mm
Dimensions (D x H x W)	68/81 x 109.6 x 15mm
Centre distance	48.5mm
Deadbolt throw	12.5mm
Faceplate size	26mm
Latch and deadbolt finish	Latch – zinc Deadbolt – zinc with hardened steel rollers
Case material finish	Steel, red powder coat
Faceplate and strike plate finish	SS, PB
Splinter guard	Yes
Supplied with	Lockcase, faceplate, strike plate, plastic splinter guard and fixings
Accessories	See lockcases accessories section for items such as intumescent kits and rebate kits

Dimensions

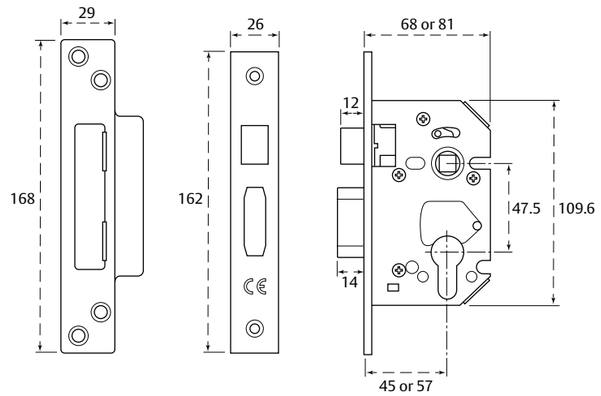

How to order

Order code	Description	Finish
JL22OVS-PB-2.5	StrongBOLT oval profile sashlock, 2.5" lockcase (boxed)	PB
JL22OVS-PB-3.0	StrongBOLT oval profile sashlock, 3.0" lockcase (boxed)	PB
JL22OVS-SS-2.5	StrongBOLT oval profile sashlock, 2.5" lockcase (boxed)	SS
JL22OVS-SS-3.0	StrongBOLT oval profile sashlock, 3.0" lockcase (boxed)	SS

ASSA ABLOY
Opening Solutions

StrongBOLT oval profile deadlock

UK style oval profile cylinder mortice deadlock.

Features and benefits

- Radius plastic splinter guard for easy installation and a professional finish
- Suitable for doors up to 54mm thick
- Chamfered bolt design for increased performance against side load attack
- Anti-saw features resistance for attack
- Anti-rattle adjustable strike plate for on-site tuning
- Standard UK profile easy for retrofitting

Classification code

2	M	4	1	0	F	1	B	A	0	0
(1/3)	(A-X)	(1-9)	(0/1)	(0/1)	(0-G)	(1-7)	(ABU)	(0-H)	(0-4)	(0-H)

EN 12209:2003

Testing and certification

UKCA / CE marked	Yes
Certified in compliance with	EN 12209, EN 1634-1
Suitable for fire doors	Timber FD30/FD60
Certifire approval	Yes
Guarantee	10 years

Specification

Inner forend	Radius
Faceplate	Square
Lever furniture fixing points	N/A
Reversible latch / handing	N/A
Angle of lever operation	N/A
Furniture	Push plate / pull handles
Cylinder compatibility	Oval profile - single, double or cylinder with thumb turn
Backset	45, 57mm
Follower	N/A
Dimensions (D x H x W)	68/81 x 89 x 15mm
Centre distance	N/A
Deadbolt throw	12.5mm
Faceplate size	26mm
Latch and deadbolt finish	Latch – zinc Deadbolt – zinc with hardened steel rollers
Case material finish	Steel, red powder coat
Faceplate and strike plate finish	SS, PB
Splinter guard	Yes
Supplied with	Lockcase, faceplate, strike plate, plastic splinter guard and fixings
Accessories	See lockcases accessories section for items such as intumescent kits and rebate kits

Dimensions

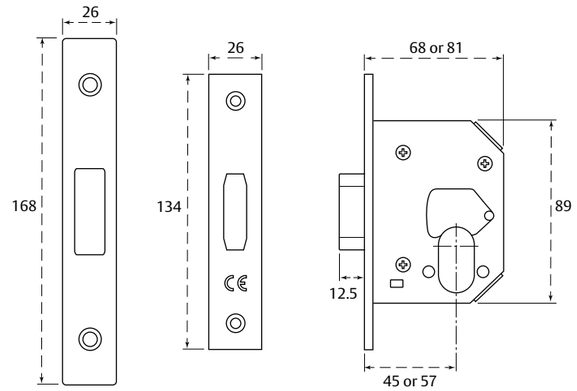

How to order

Order code	Description	Finish
JL21OVS-PB-2.5	StrongBOLT oval profile deadlock, 2.5" lockcase (boxed)	PB
JL21OVS-PB-3.0	StrongBOLT oval profile deadlock, 3.0" lockcase (boxed)	PB
JL21OVS-SS-2.5	StrongBOLT oval profile deadlock, 2.5" lockcase (boxed)	SS
JL21OVS-SS-3.0	StrongBOLT oval profile deadlock, 3.0" lockcase (boxed)	SS

ASSA ABLOY
Opening Solutions

StrongBOLT bathroom lock

UK style mortice bathroom lock.

Features and benefits

- Anti-rattle adjustable strike plate for on-site fine tuning
- Deadbolt locked or unlocked by a privacy turn on the inside and emergency release on the outside
- Standard UK profile which can be retrofitted without the need for additional carpentry or spoiling the edge of the door
- Suitable for doors up to 54mm thick
- Chamfered bolt design for increased performance against side load attack
- Easily reversible latch that uses the unique SwitchLatch technology
- Anti-saw features resistance for attack
- Standard UK profile easy for retrofitting
- Radius splinter guard for easy installation and a professional finish

Classification code

2	M	4	1	0	F	1	B	G	2	0
(1/3)	(A-X)	(1-9)	(0/1)	(0/1)	(0-G)	(1-7)	(ABU)	(0-H)	(0-4)	(0-H)

EN 12209:2003

Testing and certification

UKCA / CE marked	Yes
Certified in compliance with	EN 12209, EN 1634-1
Suitable for fire doors	Timber FD30/FD60
Certifire approval	Yes
Guarantee	10 years

Specification

Inner forend	Radius
Faceplate	Square
Lever furniture fixing points	38mm
Reversible latch / handing	Yes
Angle of lever operation	N/A
Furniture	Unsprung lever handles
Cylinder compatibility	Privacy turn or emergency release (5mm follower)
Backset	45, 57mm
Follower	8mm
Dimensions (D x H x W)	68/81 x 109.6 x 15mm
Centre distance	57mm
Deadbolt throw	14mm
Faceplate size	26mm
Latch and deadbolt finish	Latch – zinc Deadbolt – zinc with hardened steel rollers
Case material finish	Steel, red powder coat
Faceplate and strike plate finish	SS, PB
Splinter guard	Yes
Supplied with	Lockcase, faceplate, strike plate, plastic splinter guard and fixings
Accessories	See lockcases accessories section for items such as intumescent kits and rebate kits

Dimensions

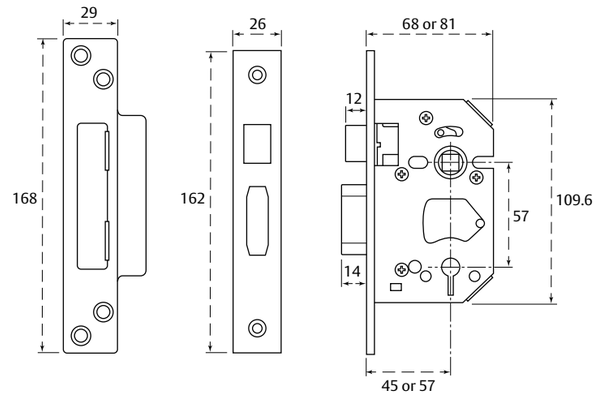

How to order

Order code	Description	Finish
J22WCS-PB-2.5	StrongBOLT bathroom lock, 2.5" lockcase (boxed)	PB
J22WCS-PB-3.0	StrongBOLT bathroom lock, 3.0" lockcase (boxed)	PB
J22WCS-SS-2.5	StrongBOLT bathroom lock, 2.5" lockcase (boxed)	SC
J22WCS-SS-3.0	StrongBOLT bathroom lock, 3.0" lockcase (boxed)	SC

3065 dual profile sashlock

UK style dual profile mortice sashlock.

Features and benefits

- Hardened steel deadbolt thrown 20mm by 360° turn of key or thumb turn
- Suitable for use with DIN severe duty rated handles
- Suitable for entrance doors to offices, private houses, industrial premises and shops
- Works with either oval or Euro profile cylinders for ultimate flexibility

5 YEAR GUARANTEE

EPD®

Testing and certification

UKCA / CE marked	No
Certified in compliance with	No
Suitable for fire doors	No
Certifire approval	No
Guarantee	5 years

Specification

Inner forend	Radius
Faceplate	Square (radius can be bought separately)
Lever furniture fixing points	30mm NE/SW bolt through fixing points
Reversible latch / handing	Yes
Angle of lever operation	N/A
Furniture	Unsprung lever handles
Cylinder compatibility	Euro or oval profile - single cylinder and thumb turn, or alternatively with double cylinders or single cylinder only
Backset	57mm
Follower	8mm
Dimensions (D x H x W)	81 x 110 x 14mm
Centre distance	48.5mm
Deadbolt throw	20mm
Faceplate size	26mm
Latch and deadbolt finish	Latch – zinc plated Deadbolt – hardened zinc
Case material finish	Steel
Faceplate and strike plate finish	SC
Splinter guard	No
Supplied with	Lockcase, faceplate, security box strike and fixings
Accessories	N/A

Dimensions

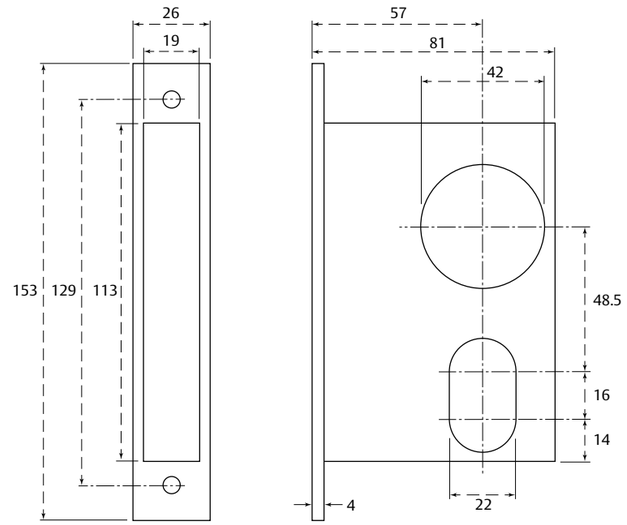

How to order

Order code	Description	Finish
10015363013	3065 Dual profile sashlock with square faceplate	SC
10015910713	3065/3020/3055T Radius faceplate	SC

3088 dual profile deadlock

UK style dual profile mortice deadlock.

Features and benefits

- Suitable for swing doors in corridors, entrances and as a secondary lock on any door
- Hardened steel deadbolt thrown 20mm by 360° turn of key or thumb turn
- Works with either oval or Euro profile cylinders for ultimate flexibility
- Suitable for use with DIN severe duty rated handles

5 YEAR GUARANTEE

EPD®

Testing and certification

UKCA / CE marked	No
Certified in compliance with	No
Suitable for fire doors	No
Certifire approval	No
Guarantee	5 years

Specification

Inner forend	Radius
Faceplate	Square or radius
Lever furniture fixing points	N/A
Reversible latch / handing	N/A
Angle of lever operation	N/A
Furniture	Push plate / pull handles
Cylinder compatibility	Euro or oval profile - single cylinder and thumb turn, or alternatively with double cylinders or single cylinder only
Backset	57mm
Follower	8mm
Dimensions (D x H x W)	81 x 110 x 14mm
Centre distance	N/A
Deadbolt throw	20mm
Faceplate size	26mm
Latch and deadbolt finish	Latch – N/A Deadbolt – hardened zinc
Case material finish	Steel
Faceplate and strike plate finish	SC
Splinter guard	No
Supplied with	Lockcase, faceplate, security box strike and fixings
Accessories	N/A

Dimensions

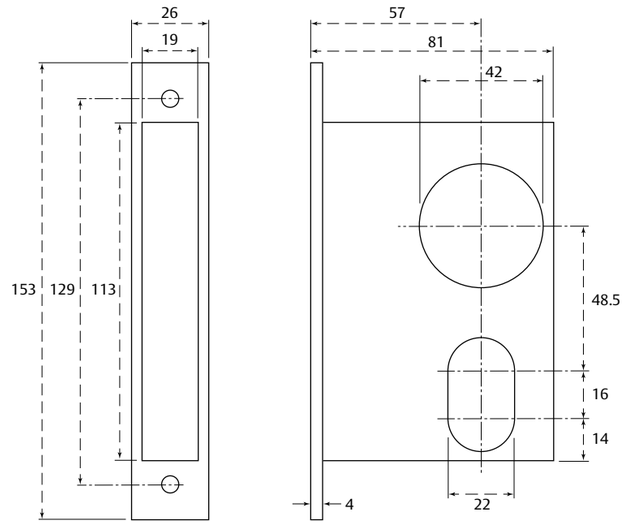

How to order

Order code	Description	Finish
10015462713	3088 Dual profile deadlock with square faceplate	SC
10018462713	3088 Dual profile deadlock with radius faceplate	SC

3098 dual profile latch

UK style mortice latch.

Features and benefits

- Latchbolt reversible without opening lockcase
- Supplied with a strike plate as standard
- For use with lever furniture on both internal and external faces to retract latchbolt
- Can be converted into a bathroom lock with appropriate accessories
- Works with either oval or Euro profile cylinders for ultimate flexibility
- Suitable for use with DIN severe duty rated handles

5 YEAR GUARANTEE

EPD®

Testing and certification

UKCA / CE marked	No
Certified in compliance with	No
Suitable for fire doors	No
Certifire approval	No
Guarantee	5 years

Specification

Inner forend	Radius
Faceplate	Square or radius
Lever furniture fixing points	30mm NE/SW bolt through fixing points
Reversible latch / handing	Yes
Angle of lever operation	N/A
Furniture	Unsprung lever handles
Cylinder compatibility	Indicator / thumb turn (5mm follower)
Backset	57mm
Follower	8mm
Dimensions (D x H x W)	81 x 110 x 14mm
Centre distance	48.5mm
Deadbolt throw	N/A
Faceplate size	26mm
Latch and deadbolt finish	Latch – zinc plated Deadbolt – N/A
Case material finish	Steel
Faceplate and strike plate finish	SC
Splinter guard	No
Supplied with	Lockcase, faceplate, security box strike and fixings
Accessories	See door furniture section for lever handle sets

Dimensions

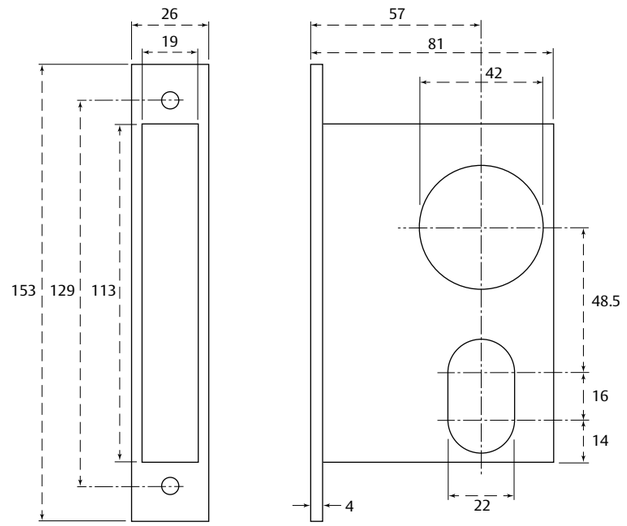

How to order

Order code	Description	Finish
10015563013	3098 mortice latch with square faceplate	SC
10018563013	3098 mortice latch with radius faceplate	SC

ASSA ABLOY
Opening Solutions

3055T dual profile bathroom lock

UK style mortice bathroom toilet lock.

Features and benefits

- Latchbolt reversible without opening lockcase
- Hardened steel deadbolt thrown 16mm by internal thumb turn
- Accepts bathroom accessories with 5mm square spindle
- Ideal for use with 263 toilet accessory

5 YEAR GUARANTEE

EPD®

Testing and certification

UKCA / CE marked	No
Certified in compliance with	No
Suitable for fire doors	No
Certifire approval	No
Guarantee	5 years

Specification

Inner forend	Radius
Faceplate	Square (radius can be bought separately)
Lever furniture fixing points	30mm NE/SW bolt through fixing points
Reversible latch / handing	Yes
Angle of lever operation	N/A
Furniture	Unsprung lever handles
Cylinder compatibility	Indicator / thumb turn (5mm follower)
Backset	57mm
Follower	8mm
Dimensions (D x H x W)	81 x 110 x 14mm
Centre distance	57mm
Deadbolt throw	16mm
Faceplate size	26mm
Latch and deadbolt finish	Latch – case hardened barrel nickel Deadbolt – barrel nickel
Case material finish	Steel
Faceplate and strike plate finish	SC
Splinter guard	No
Supplied with	Lockcase, faceplate, strike plate and fixings
Accessories	See door furniture section for items such as 263 toilet accessory

Dimensions

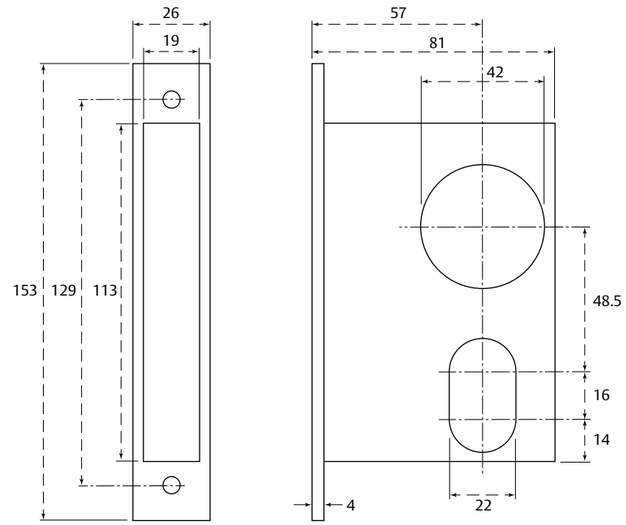

How to order

Order code	Description	Finish
10015662013	3055T Bathroom lock with square faceplate	SC
10015910713	3065/3020/3055T Radius faceplate	SC

3084 dual profile nightlatch with snib lock-back

UK style dual profile mortice nightlatch with snib lock-back.

Features and benefits

- Nightlatches are suitable for entrance doors which must lock automatically when the door is closed
- Hardened steel 13mm latchbolt deadlocks automatically when door is closed
- Hold-back snib for locking bolt into lockcase
- Works with either oval or Euro profile cylinders for ultimate flexibility
- Latchbolt is easily reversible

5 YEAR GUARANTEE

EPD®

Testing and certification

UKCA / CE marked	No
Certified in compliance with	No
Suitable for fire doors	No
Certifire approval	No
Guarantee	5 years

Specification

Inner forend	Radius
Faceplate	Square or radius
Lever furniture fixing points	N/A
Reversible latch / handing	Yes
Angle of lever operation	N/A
Furniture	Push plate / pull handle
Cylinder compatibility	Euro or oval profile - single cylinder and thumb turn, or alternatively with double cylinders or single cylinder only
Backset	57mm
Follower	8mm
Dimensions (D x H x W)	81 x 110 x 14mm
Centre distance	48.5mm
Deadbolt throw	N/A
Faceplate size	26mm
Latch and deadbolt finish	Latch – case hardened barrel nickel Deadbolt – N/A
Case material finish	Steel
Faceplate and strike plate finish	SC
Splinter guard	No
Supplied with	Lockcase, faceplate, security box strike and fixings
Accessories	N/A

Dimensions

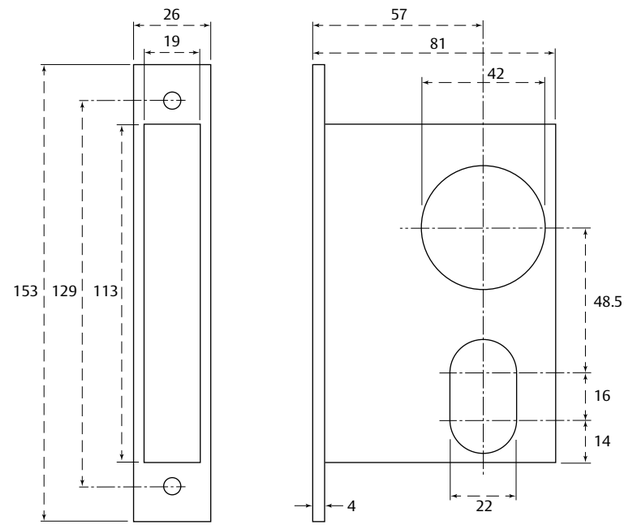

How to order

Order code	Description	Finish
10015762013	3084 Dual profile nightlatch with square faceplate	SC
10018762013	3084 Dual profile nightlatch with radius faceplate	SC

3085 dual profile nightlatch without lock-back

UK style dual profile mortice nightlatch without lock-back.

Features and benefits

- Nightlatches are suitable for entrance doors which must lock automatically when the door is closed
- Hardened steel 13mm latchbolt deadlocks automatically when door is closed
- Latchbolt is easily reversible
- Works with either oval or Euro profile cylinders for ultimate flexibility

Testing and certification

UKCA / CE marked	No
Certified in compliance with	No
Suitable for fire doors	No
Certifire approval	No
Guarantee	5 years

Specification

Inner forend	Radius
Faceplate	Square or radius
Lever furniture fixing points	30mm NE/SW bolt through fixing points
Reversible latch / handing	Yes
Angle of lever operation	N/A
Furniture	Unsprung lever handles
Cylinder compatibility	Euro or oval profile - single cylinder and thumb turn, or alternatively with double cylinders or single cylinder only
Backset	57mm
Follower	8mm
Dimensions (D x H x W)	81 x 110 x 14mm
Centre distance	48.5mm
Deadbolt throw	N/A
Faceplate size	26mm
Latch and deadbolt finish	Latch – case hardened barrel nickel Deadbolt – N/A
Case material finish	Steel
Faceplate and strike plate finish	SC
Splinter guard	No
Supplied with	Lockcase, faceplate, security box strike and fixings
Accessories	N/A

Dimensions

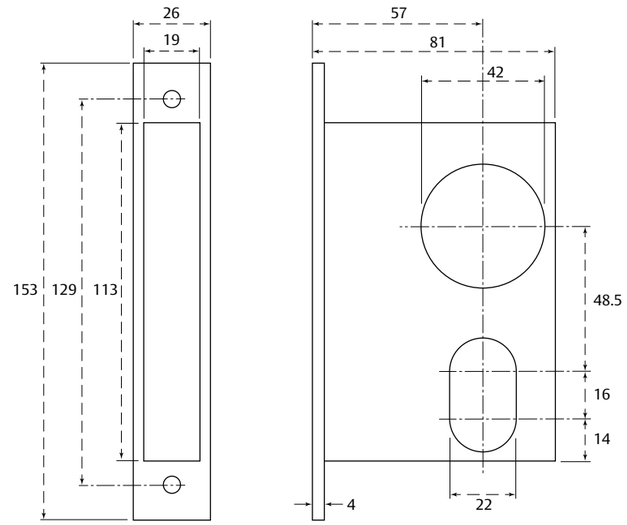

How to order

Order code	Description	Finish
10015862013	3085 Dual profile nightlatch with square faceplate	SC
10018862013	3085 Dual profile nightlatch with radius faceplate	SC

3061 dual profile escape nightlatch without lock-back

UK style dual profile mortice escape nightlatch with no lock-back.

Features and benefits

- Suitable for entrance and exit doors which must lock automatically when the door is closed
- Lever handle provides a fast, safe exit in an emergency
- Ideal for use with electric strikes in access control applications
- Available with single cylinder which uses either Euro or UK oval profile cylinders
- Hardened steel 13mm latchbolt deadlocks automatically when door is closed
- Works with either oval or Euro profile cylinders for ultimate flexibility
- Latchbolt reversible without opening the lockcase

5 YEAR GUARANTEE

EPD®

Testing and certification

UKCA / CE marked	No
Certified in compliance with	No
Suitable for fire doors	No
Certifire approval	No
Guarantee	5 years

Specification

Inner forend	Radius
Faceplate	Square or radius
Lever furniture fixing points	30mm NE/SW bolt through fixing points
Reversible latch / handing	Yes
Angle of lever operation	N/A
Furniture	Unsprung lever handles
Cylinder compatibility	Euro or oval - single cylinder
Backset	57mm
Follower	8mm
Dimensions (D x H x W)	81 x 110 x 14mm
Centre distance	48.5mm
Deadbolt throw	N/A
Faceplate size	26mm
Latch and deadbolt finish	Latch – case hardened barrel nickel Deadbolt – N/A
Case material finish	Steel
Faceplate and strike plate finish	SC
Splinter guard	No
Supplied with	Lockcase, faceplate, security box strike and fixings
Accessories	N/A

Dimensions

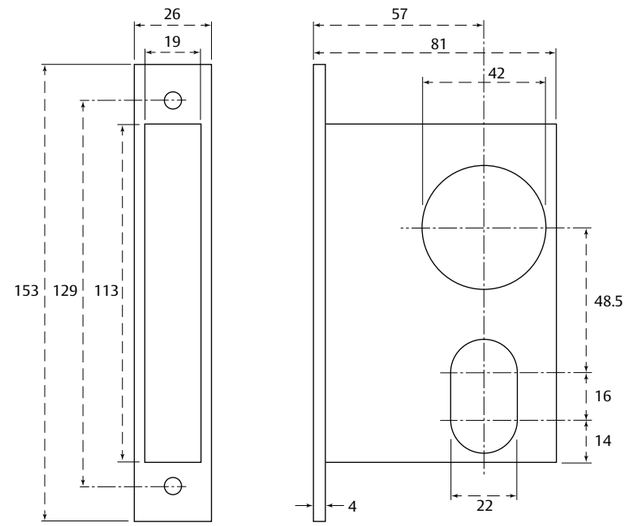

How to order

Order code	Description	Finish
10033362013	3061 Dual profile nightlatch with square faceplate	SC
10033762013	3061 Dual profile nightlatch with radius faceplate	SC

ASSA ABLOY
Opening Solutions

3062 dual profile escape nightlatch with snib lock-back

UK style dual profile mortice escape nightlatch with snib lock-back.

Features and benefits

- Suitable for entrance and exit doors which must lock automatically when the door is closed
- The lever handle provides a fast, safe exit in an emergency
- Ideal for use with electric strikes in access control applications
- Hardened steel 13mm latchbolt deadlocks automatically when door is closed
- Hold-back snib for locking bolt into lockcase
- Latchbolt reversible without opening lockcase
- Works with either oval or Euro profile cylinders for ultimate flexibility

5 YEAR GUARANTEE

EPD®

Testing and certification

UKCA / CE marked	No
Certified in compliance with	No
Suitable for fire doors	No
Certifire approval	No
Guarantee	5 years

Specification

Inner forend	Radius
Faceplate	Square or radius
Lever furniture fixing points	30mm NE/SW bolt through fixing points
Reversible latch / handing	Yes
Angle of lever operation	N/A
Furniture	Unsprung lever handles
Cylinder compatibility	Euro or oval - single cylinder
Backset	57mm
Follower	8mm
Dimensions (D x H x W)	81 x 110 x 14mm
Centre distance	48.5mm
Deadbolt throw	N/A
Faceplate size	26mm
Latch and deadbolt finish	Latch – case hardened barrel nickel Deadbolt – N/A
Case material finish	Steel
Faceplate and strike plate finish	SC
Splinter guard	No
Supplied with	Lockcase, faceplate, security box strike and fixings
Accessories	N/A

Dimensions

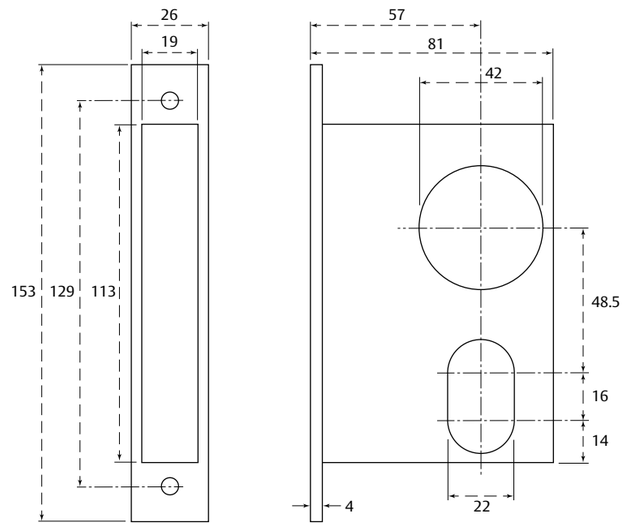

How to order

Order code	Description	Finish
10033462013	3062 Dual profile nightlatch with square faceplate	SC
10033862013	3062 Dual profile nightlatch with radius faceplate	SC

ASSA ABLOY
Opening Solutions

3059 dual profile escape nightlatch without lock-back, non-deadlocking

UK style dual profile mortice escape nightlatch without lock-back, non-deadlocking.

Features and benefits

- Suitable for entrance and exit doors which must lock automatically when the door is closed
- The lever handle provides a fast, safe exit in an emergency
- Ideal for use with electric strikes in access control applications
- Hardened steel 13mm latchbolt without automatic deadlocking
- Latchbolt reversible without opening lockcase
- Works with either oval or Euro profile cylinders for ultimate flexibility

5 YEAR GUARANTEE

EPD®

Testing and certification

UKCA / CE marked	No
Certified in compliance with	No
Suitable for fire doors	No
Certifire approval	No
Guarantee	5 years

Specification

Inner forend	Radius
Faceplate	Square or radius
Lever furniture fixing points	30mm NE/SW bolt through fixing points
Reversible latch / handing	Yes
Angle of lever operation	N/A
Furniture	Unsprung lever handles
Cylinder compatibility	Euro or oval - single cylinder
Backset	57mm
Follower	8mm
Dimensions (D x H x W)	81 x 110 x 14mm
Centre distance	48.5mm
Deadbolt throw	N/A
Faceplate size	26mm
Latch and deadbolt finish	Latch – case hardened barrel nickel Deadbolt – N/A
Case material finish	Steel
Faceplate and strike plate finish	SC
Splinter guard	No
Supplied with	Lockcase, faceplate, security box strike and fixings
Accessories	N/A

Dimensions

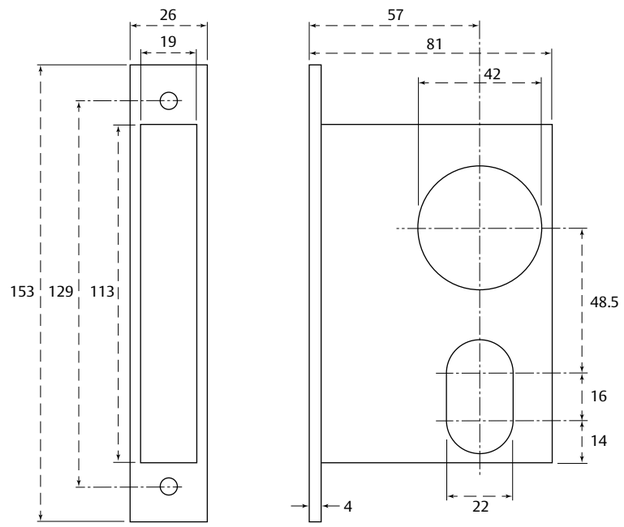

How to order

Order code	Description	Finish
10033562013	3059 Dual profile nightlatch with square faceplate	SC
10033962013	3059 Dual profile nightlatch with radius faceplate	SC

3020 dual profile escape sashlock

UK style dual profile mortice escape sashlock.

Features and benefits

- Simple operation makes it ideal for use by less abled-bodied users
- Available with single cylinder only, which uses either Euro or UK oval profile cylinders
- Hardened steel deadbolt thrown 16mm by internal lever handle or by 360° turn of key
- Works with either oval or Euro profile cylinders for ultimate flexibility
- Suitable for use with DIN severe duty rated handles
- Latchbolt reversible without opening lockcase

Testing and certification

UKCA / CE marked	No
Certified in compliance with	No
Suitable for fire doors	No
Certifire approval	No
Guarantee	5 years

Specification

Inner forend	Radius
Faceplate	Square (Radius can be bought separately)
Lever furniture fixing points	30mm NE/SW bolt through fixing points
Reversible latch / handing	No – handing must be stated at time of order
Angle of lever operation	N/A
Furniture	Double action lever handles
Cylinder compatibility	Euro or oval - single cylinder
Backset	57mm
Follower	8mm
Dimensions (D x H x W)	81 x 110 x 14mm
Centre distance	48.5mm
Deadbolt throw	16mm
Faceplate size	26mm
Latch and deadbolt finish	Latch – case hardened nickel Deadbolt – case hardened barrel nickel
Case material finish	Steel
Faceplate and strike plate finish	SC
Splinter guard	No
Supplied with	Lockcase, faceplate, security box strike and fixings
Accessories	N/A

Dimensions

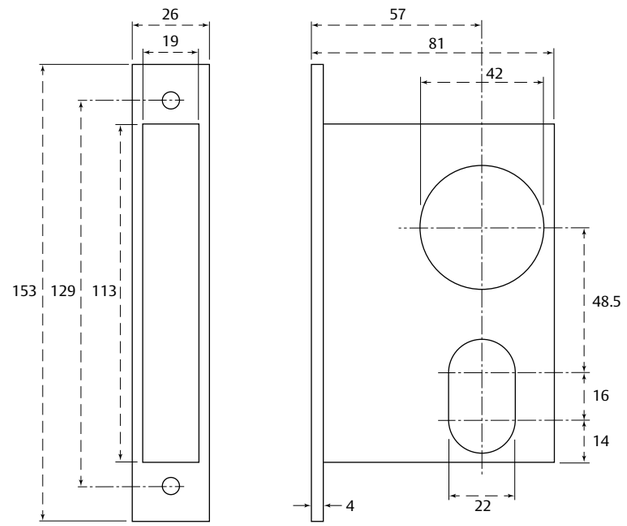

How to order

Order code	Description	Finish
10044462013	3020R Dual profile escape sashlock, RH with square faceplate	SC
10044862013	3020L Dual profile escape sashlock, LH with square faceplate	SC
10015910713	3065/3020/3055T Radius Faceplate	SC

3069 dual profile escape deadlock

UK style dual profile mortice escape deadlock.

Features and benefits

- Escape deadlock combining high security with ease of escape in an emergency
- Ideal for perimeter doors in commercial premises
- Hardened steel deadbolt thrown 16mm by 360° turn of key
- May be withdrawn by lever handle
- Works with either oval or Euro profile cylinders for ultimate flexibility

5 YEAR GUARANTEE

EPD®

Testing and certification

UKCA / CE marked	No
Certified in compliance with	No
Suitable for fire doors	No
Certifire approval	No
Guarantee	5 years

Specification

Inner forend	Radius
Faceplate	Square or radius
Lever furniture fixing points	30mm NE/SW bolt through fixing points
Reversible latch / handing	N/A
Angle of lever operation	N/A
Furniture	Half set of unsprung lever handles
Cylinder compatibility	Euro or oval profile - double cylinder
Backset	57mm
Follower	8mm
Dimensions (D x H x W)	81 x 110 x 14mm
Centre distance	48.5mm
Deadbolt throw	16mm
Faceplate size	26mm
Latch and deadbolt finish	Latch – N/A Deadbolt – case hardened barrel nickel
Case material finish	Steel
Faceplate and strike plate finish	SC
Splinter guard	No
Supplied with	Lockcase, faceplate, security box strike and fixings
Accessories	N/A

Dimensions

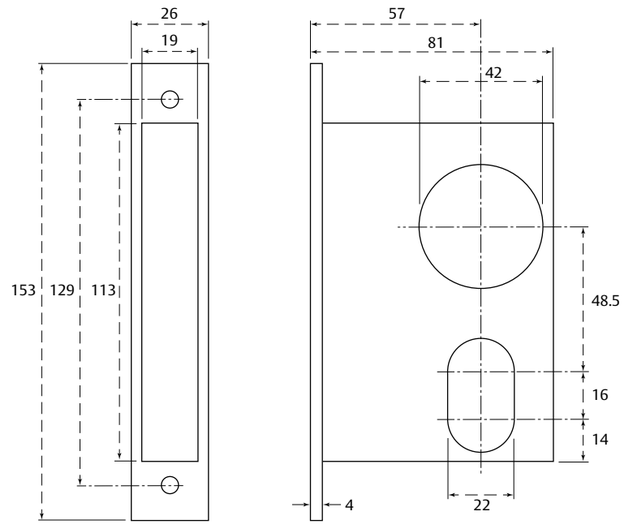

How to order

Order code	Description	Finish
10045262713	3069 Dual profile escape deadlock with square faceplate	SC
10045362713	3069 Dual profile escape deadlock with radius faceplate	SC

DIN lockcases

A Euro profile range manufactured in accordance with DIN 18251. Designed with commercial setups in mind, our ranges can be tailored to a wide variety of specification needs.

We offer two ranges of DIN lockcases:

400 series
A new range designed for frequent use applications where potential misuse may take place. The range is ideal for healthcare, education, hospitality, office, residential and other commercial spaces.
The Euro profile cylinders can also be incorporated into a buildings existing master key suite.

HD72
With a 15-year guarantee, you can specify the HD72 range with confidence as these heavy-duty locks are ideal for high usage areas.
The Grade 3 category of use also provides peace of mind for applications such as public buildings, shopping centres, leisure centres, offices and universities where high frequency use is expected.

Features and benefits

- Easily reversible latch
- Suitable for sprung and light unsprung lever furniture
- Seamless fitting due to 2-way adjustable strike plates with splinter guard to ensure door engages to frame correctly
- Stainless steel faceplate and strike plate in square and radius version (radius version improves door preparation efficiency with machine routing)

ASSA ABLOY
Opening Solutions

400 series Euro profile sashlock

DIN Euro profile cylinder mortice sashlock.

Features and benefits

- Suitable for latched doors requiring deadbolt locking security
- Stainless steel faceplate and strike plate
- Accepts 38mm centres bolt-through fixings
- Meets the requirements of Approved Document M and Equality Act 2010
- Faceplate available in radius or square
- For use with sprung and light unsprung door furniture
- Can be incorporated into an existing master key suite

Classification code

2	S	8	1	0	G	3	B	C	2	0
(1/3)	(A-X)	(1-9)	(0/1)	(0/1)	(0-G)	(1-7)	(ABU)	(0-H)	(0-4)	(0-H)

EN 12209:2003

Testing and certification

UKCA / CE marked	Yes
Certified in compliance with	EN 12209, EN 1634-1, BS 8300
Suitable for fire doors	Timber FD30/FD60/FD90/FD120, metal FD240
Certifire approval	Yes
Guarantee	5 years

Specification

Inner forend	N/A
Faceplate	Radius or square
Lever furniture fixing points	Accepts 38mm centers bolt-through
Reversible latch / handing	Yes
Angle of lever operation	N/A
Furniture	For use with sprung and light unsprung door furniture
Cylinder compatibility	Euro profile - single, double or cylinder with thumb turn
Backset	55, 60mm
Follower	8mm
Dimensions (D x H x W)	82/87 x 165 x 15mm
Centre distance	72mm
Deadbolt throw	20mm
Faceplate size	24mm
Latch and deadbolt finish	Latch – satin nickle, Deadbolt – satin nickle
Case material finish	Zinc plated
Faceplate and strike plate finish	SS, PB
Splinter guard	Plastic
Supplied with	Lockcase with faceplate, strike plate, plastic splinter guard, timber and metal fixings
Accessories	See lockcases accessories section for items such as intumescent kit

Dimensions

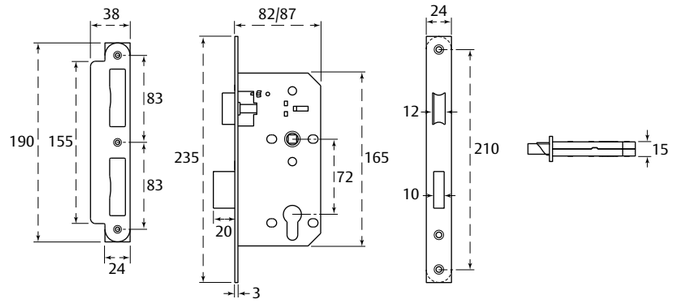

How to order

Order code	Description	Backset	Finish
J0347255EU-SL-S-SS	DIN sashlock, with square faceplate	55mm	SS
J0347255EU-SL-R-SS	DIN sashlock, with radius faceplate	55mm	SS
J0347255EU-SL-S-PB	DIN sashlock, with square faceplate	55mm	PB
J0347255EU-SL-R-PB	DIN sashlock, with radius faceplate	55mm	PB
J0347260EU-SL-S-SS	DIN sashlock, with square faceplate	60mm	SS
J0347260EU-SL-R-SS	DIN sashlock, with radius faceplate	60mm	SS
J0347260EU-SL-S-PB	DIN sashlock, with square faceplate	60mm	PB
J0347260EU-SL-R-PB	DIN sashlock, with radius faceplate	60mm	PB

ASSA ABLOY
Opening Solutions

400 series Euro profile latch

DIN mortice latch.

Features and benefits

- Suitable for latched doors remaining unlocked at all times
- Faceplate available in radius or square
- For use with sprung and light unsprung door furniture
- Meets the requirements of Approved Document M and Equality Act 2010
- Stainless steel faceplate and strike plate
- Accepts 38mm centres bolt-through fixings

Classification code

2	S	8	1	0	G	-	B	0	2	0
(1/3)	(A-X)	(1-9)	(0/1)	(0/1)	(0-G)	(1-7)	(ABU)	(0-H)	(0-4)	(0-H)

EN 12209:2003

Testing and certification

UKCA / CE marked	Yes
Certified in compliance with	EN 12209, EN 1634-1, BS 8300
Suitable for fire doors	Timber FD30/FD60/FD90/FD120, metal FD240
Certifire approval	Yes
Guarantee	5 years

Specification

Inner forend	N/A
Faceplate	Radius or square
Lever furniture fixing points	Accepts 38mm centers bolt-through
Reversible latch / handing	Yes
Angle of lever operation	N/A
Furniture	For use with sprung and light unsprung door furniture
Cylinder compatibility	N/A
Backset	55, 60mm
Follower	8mm
Dimensions (D x H x W)	82/87 x 165 x 15mm
Centre distance	N/A
Deadbolt throw	N/A
Faceplate size	24mm
Latch and deadbolt finish	Latch – satin nickel, Deadbolt – N/A
Case material finish	Zinc plated
Faceplate and strike plate finish	SS, PB
Splinter guard	Plastic
Supplied with	Lockcase with faceplate, strike plate, plastic splinter guard, timber and metal fixings
Accessories	See lockcases accessories section for items such as intumescent kit

Dimensions

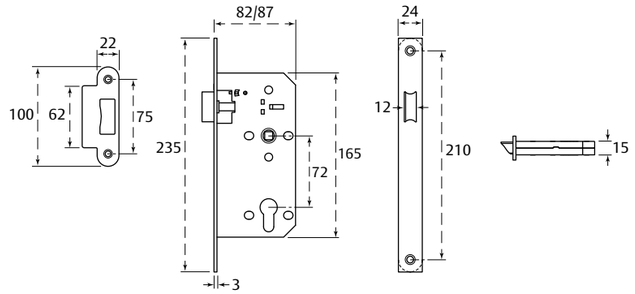

How to order

Order code	Description	Backset	Finish
J0347255EU-LA-S-SS	DIN latch, with square faceplate	55mm	SS
J0347255EU-LA-R-SS	DIN latch, with radius faceplate	55mm	SS
J0347255EU-LA-S-PB	DIN latch, with square faceplate	55mm	PB
J0347255EU-LA-R-PB	DIN latch, with radius faceplate	55mm	PB
J0347260EU-LA-S-SS	DIN latch, with square faceplate	60mm	SS
J0347260EU-LA-R-SS	DIN latch, with radius faceplate	60mm	SS
J0347260EU-LA-S-PB	DIN latch, with square faceplate	60mm	PB
J0347260EU-LA-R-PB	DIN latch, with radius faceplate	60mm	PB

ASSA ABLOY
Opening Solutions

400 series Euro profile deadlock

DIN Euro profile cylinder mortice deadlock.

Features and benefits

- Suitable for unlatched doors with deadbolt locking security
- 20mm deadbolt throw
- Can be incorporated into an existing master key suite
- Meets the requirements of Approved Document M and Equality Act 2010
- Stainless steel faceplate and strike plate

Classification code

2	S	8	1	0	G	3	B	C	0	0
(1/3)	(A-X)	(1-9)	(0/1)	(0/1)	(0-G)	(1-7)	(ABU)	(0-H)	(0-4)	(0-H)

EN 12209:2003

Testing and certification

UKCA / CE marked	Yes
Certified in compliance with	EN 12209, EN 1634-1, BS 8300
Suitable for fire doors	Timber FD30/FD60/FD90/FD120, metal FD240
Certifire approval	Yes
Guarantee	5 years

Specification

Inner forend	N/A
Faceplate	Radius or square
Lever furniture fixing points	N/A
Reversible latch / handing	N/A
Angle of lever operation	N/A
Furniture	Push plate / pull handle
Cylinder compatibility	Euro profile - single, double or cylinder with thumb turn
Backset	55, 60mm
Follower	8mm
Dimensions (D x H x W)	82/87 x 165 x 15mm
Centre distance	N/A
Deadbolt throw	20mm
Faceplate size	24mm
Latch and deadbolt finish	Latch – N/A, Deadbolt – satin nickel
Case material finish	Zinc plated
Faceplate and strike plate finish	SS, PB
Splinter guard	Plastic
Supplied with	Lockcase with faceplate, strike plate, plastic splinter guard, timber and metal fixings
Accessories	See lockcases accessories section for items such as intumescent kit

Dimensions

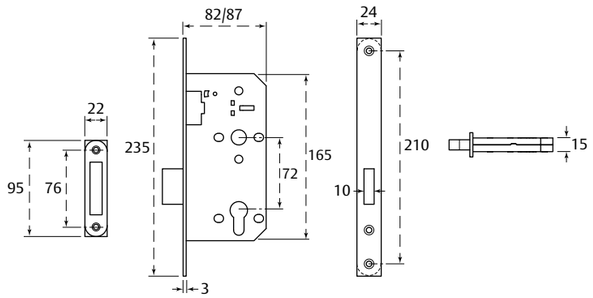

How to order

Order code	Description	Backset	Finish
J0347255EU-DL-S-SS	DIN deadlock, with square faceplate	55mm	SS
J0347255EU-DL-R-SS	DIN deadlock, with radius faceplate	55mm	SS
J0347255EU-DL-S-PB	DIN deadlock, with square faceplate	55mm	PB
J0347255EU-DL-R-PB	DIN deadlock, with radius faceplate	55mm	PB
J0347260EU-DL-S-SS	DIN deadlock, with square faceplate	60mm	SS
J0347260EU-DL-R-SS	DIN deadlock, with radius faceplate	60mm	SS
J0347260EU-DL-S-PB	DIN deadlock, with square faceplate	60mm	PB
J0347260EU-DL-R-PB	DIN deadlock, with radius faceplate	60mm	PB

ASSA ABLOY
Opening Solutions

400 series Euro profile nightlatch

DIN Euro profile cylinder mortice nightlatch.

Features and benefits

- Suitable for latched doors with cylinder key operated access from outside, and handle access from inside
- Can be incorporated to an existing master key suite
- Splinter guard supplied as standard
- Meets the requirements of Approved Document M and Equality Act 2010

Classification code

2	S	8	1	0	G	3	B	0	2	0
(1/3)	(A-X)	(1-9)	(0/1)	(0/1)	(0-G)	(1-7)	(ABU)	(0-H)	(0-4)	(0-H)

EN 12209:2003

UK CA CE 5 YEAR GUARANTEE certifire

Testing and certification

UKCA / CE marked	Yes
Certified in compliance with	EN 12209, EN 1634-1, BS 8300
Suitable for fire doors	Timber FD30/FD60/FD90/FD120, metal FD240
Certifire approval	Yes
Guarantee	5 years

Specification

Inner forend	N/A
Faceplate	Radius or square
Lever furniture fixing points	Accepts 38mm centres bolt-through
Reversible latch / handing	Yes
Angle of lever operation	N/A
Furniture	For use with sprung and light unsprung door furniture
Cylinder compatibility	Euro profile - single, double or cylinder with thumb turn
Backset	55, 60mm
Follower	8mm
Dimensions (D x H x W)	82/87 x 165 x 15mm
Centre distance	72mm
Deadbolt throw	N/A
Faceplate size	24mm
Latch and deadbolt finish	Latch – satin nickel, Deadbolt – N/A
Case material finish	Zinc plated
Faceplate and strike plate finish	SS, PB
Splinter guard	Plastic
Supplied with	Lockcase with faceplate, strike plate, plastic splinter guard, timber and metal fixings
Accessories	See lockcases accessories section for items such as intumescent kit

Dimensions

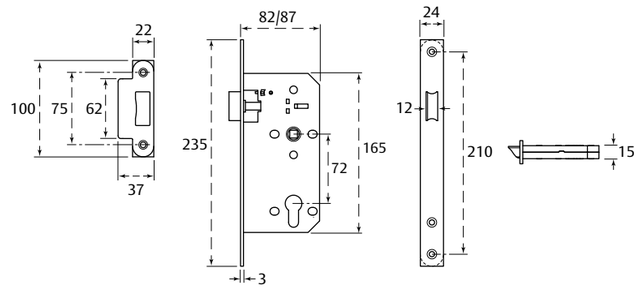

How to order

Order code	Description	Backset	Finish
J0347255EU-NL-S-SS	DIN nightlatch, with square faceplate	55mm	SS
J0347255EU-NL-R-SS	DIN nightlatch, with radius faceplate	55mm	SS
J0347255EU-NL-S-PB	DIN nightlatch, with square faceplate	55mm	PB
J0347255EU-NL-R-PB	DIN nightlatch, with radius faceplate	55mm	PB
J0347260EU-NL-S-SS	DIN nightlatch, with square faceplate	60mm	SS
J0347260EU-NL-R-SS	DIN nightlatch, with radius faceplate	60mm	SS
J0347260EU-NL-S-PB	DIN nightlatch, with square faceplate	60mm	PB
J0347260EU-NL-R-PB	DIN nightlatch, with radius faceplate	60mm	PB

ASSA ABLOY
Opening Solutions

400 series bathroom lock

DIN mortice bathroom lock.

Features and benefits

- Suitable for bathroom door with deadbolt locking privacy
- Recommend fitting with coin release slot furniture for emergency access
- Faceplate available in radius or square
- Stainless steel faceplate and strike plate
- Accepts 38mm centres bolt-through fixings

Testing and certification

UKCA / CE marked	No
Certified in compliance with	BS 8300
Suitable for fire doors	No
Certifire approval	No
Guarantee	5 years

Specification

Inner forend	N/A
Faceplate	Radius or square
Lever furniture fixing points	Accepts 38mm centres bolt-through
Reversible latch / handing	Yes
Angle of lever operation	N/A
Furniture	For use with sprung and light unsprung door furniture
Cylinder compatibility	Indicator / thumb turn (5mm follower)
Backset	55, 60mm
Follower	8mm
Dimensions (D x H x W)	82/87 x 165 x 15mm
Centre distance	78mm
Deadbolt throw	20mm
Faceplate size	24mm
Latch and deadbolt finish	Latch – satin nicklel, Deadbolt – satin nicklel
Case material finish	Zinc plated
Faceplate and strike plate finish	SS, PB
Splinter guard	Plastic
Supplied with	Lockcase with faceplate, strike plate, plastic splinter guard, timber and metal fixings
Accessories	N/A

Dimensions

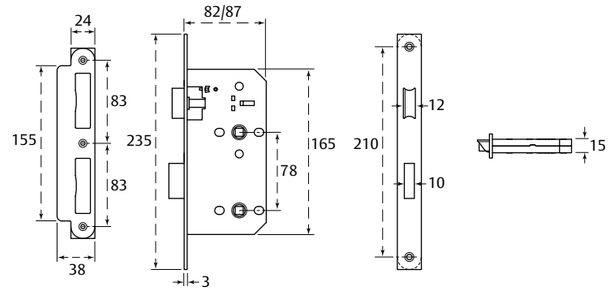

How to order

Order code	Description	Backset	Finish
J0347255EU-WC-S-SS	DIN bathroom lock, with square faceplate	55mm	SS
J0347255EU-WC-R-SS	DIN bathroom lock, with radius faceplate	55mm	SS
J0347255EU-WC-S-PB	DIN bathroom lock, with square faceplate	55mm	PB
J0347255EU-WC-R-PB	DIN bathroom lock, with radius faceplate	55mm	PB
J0347260EU-WC-S-SS	DIN bathroom lock, with square faceplate	60mm	SS
J0347260EU-WC-R-SS	DIN bathroom lock, with radius faceplate	60mm	SS
J0347260EU-WC-S-PB	DIN bathroom lock, with square faceplate	60mm	PB
J0347260EU-WC-R-PB	DIN bathroom lock, with radius faceplate	60mm	PB

ASSA ABLOY
Opening Solutions

400 series Euro profile escape sashlock

DIN Euro profile cylinder mortice escape sashlock.

Features and benefits

- Suitable for escape doors requiring deadbolt locking security from outside and single action unlocking from the inside
- Designed to deliver high performance locking for years
- 20mm deadbolt throw
- Faceplate available in radius or square
- Stainless steel faceplate and strike plate
- Accepts 38mm centres bolt-through fixings

5 YEAR GUARANTEE

Testing and certification

UKCA / CE marked	No
Certified in compliance with	BS 8300
Suitable for fire doors	No
Certifire approval	No
Guarantee	5 years

Specification

Inner forend	N/A
Faceplate	Radius or square
Lever furniture fixing points	Accepts 38mm centres bolt-through
Reversible latch / handing	Yes
Angle of lever operation	N/A
Furniture	For use with sprung and light unsprung door furniture
Cylinder compatibility	Euro profile - single, double or cylinder with thumb turn
Backset	55, 60mm
Follower	8mm
Dimensions (D x H x W)	82/87 x 165 x 15mm
Centre distance	72mm
Deadbolt throw	20mm
Faceplate size	24mm
Latch and deadbolt finish	Latch – satin nicklel, Deadbolt – satin nicklel
Case material finish	Zinc plated
Faceplate and strike plate finish	SS, PB
Splinter guard	Plastic
Supplied with	Lockcase with faceplate, strike plate, plastic splinter guard, timber and metal fixings
Accessories	N/A

Dimensions

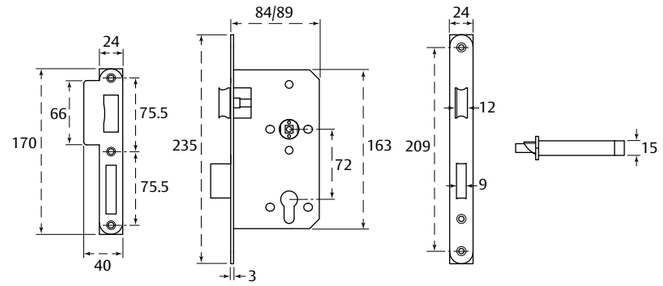

How to order

Order code	Description	Backset	Finish
J0347255EU-ESL-S-SS	DIN escape sashlock, with square faceplate	55mm	SS
J0347255EU-ESL-R-SS	DIN escape sashlock, with radius faceplate	55mm	SS
J0347255EU-ESL-S-PB	DIN escape sashlock, with square faceplate	55mm	PB
J0347255EU-ESL-R-PB	DIN escape sashlock, with radius faceplate	55mm	PB
J0347260EU-ESL-S-SS	DIN escape sashlock, with square faceplate	60mm	SS
J0347260EU-ESL-R-SS	DIN escape sashlock, with radius faceplate	60mm	SS
J0347260EU-ESL-S-PB	DIN escape sashlock, with square faceplate	60mm	PB
J0347260EU-ESL-R-PB	DIN escape sashlock, with radius faceplate	60mm	PB

ASSA ABLOY
Opening Solutions

400 series Euro profile roller lock

DIN Euro profile cylinder mortice roller lock with a deadbolt.

Features and benefits

- Suitable for doors requiring rollerbolt latching and deadlocking
- Security provided by cylinder operated additional deadbolt locking
- Adjustable rollerlatch makes for easy opening
- Faceplate available in radius or square
- Stainless steel faceplate and strike plate
- Accepts 38mm centres bolt-through fixings

5 YEAR GUARANTEE

Testing and certification

UKCA / CE marked	No
Certified in compliance with	BS 8300
Suitable for fire doors	No
Certifire approval	No
Guarantee	5 years

Specification

Inner forend	N/A
Faceplate	Radius or square
Lever furniture fixing points	Accepts 38mm centres bolt-through
Reversible latch / handing	Yes
Angle of lever operation	N/A
Furniture	For use with sprung and light unsprung door furniture
Cylinder compatibility	Euro profile - single, double or cylinder with thumb turn
Backset	55, 60mm
Follower	8mm
Dimensions (D x H x W)	82/87 x 165 x 15mm
Centre distance	72mm
Deadbolt throw	20mm
Faceplate size	24mm
Latch and deadbolt finish	Latch – satin nicklel, Deadbolt – satin nicklel
Case material finish	Zinc plated
Faceplate and strike plate finish	SS, PB
Splinter guard	Plastic
Supplied with	Lockcase with faceplate, strike plate, plastic splinter guard, timber and metal fixings
Accessories	N/A

Dimensions

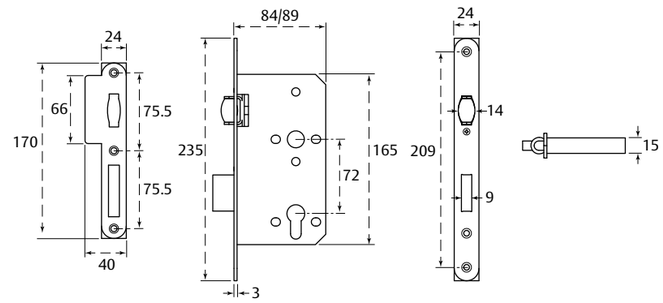

How to order

Order code	Description	Backset	Finish
J0347255EU-RL-S-SS	DIN nightlatch, with square faceplate	55mm	SS
J0347255EU-RL-R-SS	DIN nightlatch, with radius faceplate	55mm	SS
J0347255EU-RL-S-PB	DIN nightlatch, with square faceplate	55mm	PB
J0347255EU-RL-R-PB	DIN nightlatch, with radius faceplate	55mm	PB
J0347260EU-RL-S-SS	DIN nightlatch, with square faceplate	60mm	SS
J0347260EU-RL-R-SS	DIN nightlatch, with radius faceplate	60mm	SS
J0347260EU-RL-S-PB	DIN nightlatch, with square faceplate	60mm	PB
J0347260EU-RL-R-PB	DIN nightlatch, with radius faceplate	60mm	PB

ASSA ABLOY
Opening Solutions

HD72SL Euro profile sashlock

Heavy duty DIN Euro profile cylinder mortice sashlock.

Features and benefits

- Durable latch follower technology cycle tested to 3.5 million operations
- Deadbolt tested to 50,000 cycles
- For use in high frequency areas with little incentive to exercise care with use
- Two piece faceplate provides clean aesthetics and easy maintenance
- Meets the requirements of Approved Document M and Equality Act 2010

Classification code

3	X	8	1	0	G	3	B	A	2	0
(1/3)	(A-X)	(1-9)	(0/1)	(0/1)	(0-G)	(1-7)	(ABU)	(0-H)	(0-4)	(0-H)

EN 12209:2003

Testing and certification

UKCA / CE marked	Yes
Certified in compliance with	EN 12209, EN 1634-1, BS 8300
Suitable for fire doors	Timber FD30/FD60, metal FD240
Certifire approval	Yes
Guarantee	15 years

Specification

Inner forend	Radius
Faceplate	Square or radius
Lever furniture fixing points	Accepts 38mm bolt-through fixing points
Reversible latch / handing	Yes
Angle of lever operation	35°
Furniture	For use with sprung and unsprung door furniture up to 930g per pair
Cylinder compatibility	Euro profile - single, double or cylinder with thumb turn
Backset	60mm
Follower	8mm
Dimensions (D x H x W)	90 x 165 x 16mm
Centre distance	72mm
Deadbolt throw	20mm single throw
Faceplate size	24mm
Latch and deadbolt finish	Steel chrome plated
Case material finish	Heavy duty mild steel enclosed with silver finish
Faceplate and strike plate finish	SS (grade 304)
Splinter guard	Black plastic
Supplied with	Lockcase, face plate, strike plate, plastic splinter guard and fixings
Accessories	See lockcases accessories section for items such as intumescent kit and fixing packs

Dimensions

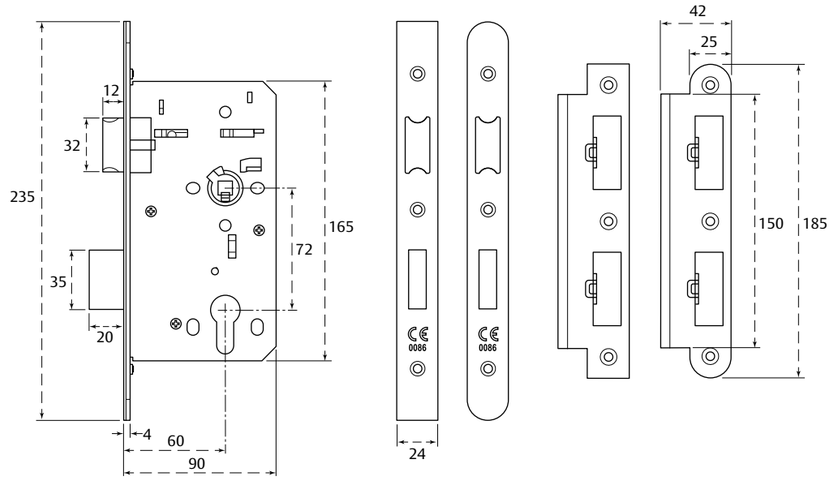

How to order

Order code	Description	Backset	Finish
JHD72SL-S-SS60	DIN sashlock, with square faceplate	60mm	SS
JHD72SL-R-SS60	DIN sashlock, with radius faceplate	60mm	SS

ASSA ABLOY
Opening Solutions

HD72DL Euro profile deadlock

Heavy duty DIN Euro profile cylinder mortice deadlock.

Features and benefits

- Deadbolt tested to 50,000 cycles
- For use in high frequency areas with little incentive to exercise care with use
- Two piece faceplate provides clean aesthetics and easy maintenance
- Meets the requirements of Approved Document M and Equality Act 2010

Classification code

3	X	8	1	0	G	3	B	A	0	0
(1/3)	(A-X)	(1-9)	(0/1)	(0/1)	(0-G)	(1-7)	(ABU)	(0-H)	(0-4)	(0-H)

EN 12209:2003

Testing and certification

UKCA / CE marked	Yes
Certified in compliance with	EN 12209, EN 1634-1, BS 8300
Suitable for fire doors	Timber FD30/FD60, metal FD240
Certifire approval	Yes
Guarantee	15 years

Specification

Inner forend	Radius
Faceplate	Square or radius
Lever furniture fixing points	N/A
Reversible latch / handing	N/A
Angle of lever operation	N/A
Furniture	Push plate / pull handle
Cylinder compatibility	Euro profile - single, double or cylinder with thumb turn
Backset	60mm
Follower	8mm
Dimensions (D x H x W)	90 x 165 x 16mm
Centre distance	N/A
Deadbolt throw	20mm single throw
Faceplate size	24mm
Latch and deadbolt finish	Steel chrome plated
Case material finish	Heavy duty mild steel enclosed with silver finish
Faceplate and strike plate finish	SS (grade 304)
Splinter guard	Black plastic
Supplied with	Lockcase, face plate, strike plate, plastic splinter guard and fixings
Accessories	See lockcases accessories section for items such as intumescent kit and fixing packs

Dimensions

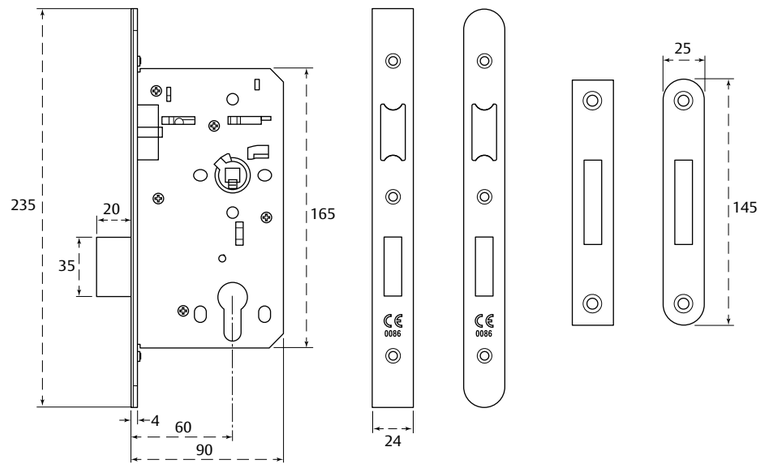

How to order

Order code	Description	Backset	Finish
JHD72DL-S-SS60	DIN deadlock lock, with square faceplate	60mm	SS
JHD72DL-R-SS60	DIN deadlock lock, with radius faceplate	60mm	SS

ASSA ABLOY
Opening Solutions

HD72LA Euro profile latch

Heavy duty DIN Euro profile cylinder mortice latch.

Features and benefits

- Durable latch follower technology cycle tested to 3.5 million operations
- For use in high frequency areas with little incentive to exercise care with use
- Two piece faceplate provides clean aesthetics and easy maintenance
- Meets the requirements of Approved Document M and Equality Act 2010

Classification code

3	X	8	1	0	G	NPD	B	0	2	0
(1/3)	(A-X)	(1-9)	(0/1)	(0/1)	(0-G)	(1-7)	(ABU)	(0-H)	(0-4)	(0-H)

EN 12209:2003

Testing and certification

UKCA / CE marked	Yes
Certified in compliance with	EN 12209, EN 1634-1, BS 8300
Suitable for fire doors	Timber FD30/FD60, metal FD240
Certifire approval	Yes
Guarantee	15 years

Specification

Inner forend	Radius
Faceplate	Square or radius
Lever furniture fixing points	Accepts 38mm bolt-through fixing points
Reversible latch / handing	Yes
Angle of lever operation	35°
Furniture	For use with sprung and unsprung door furniture up to 930g per pair
Cylinder compatibility	N/A
Backset	60mm
Follower	8mm
Dimensions (D x H x W)	90 x 165 x 16mm
Centre distance	N/A
Deadbolt throw	N/A
Faceplate size	24mm
Latch and deadbolt finish	Steel chrome plated
Case material finish	Heavy duty mild steel enclosed with silver finish
Faceplate and strike plate finish	SS (grade 304)
Splinter guard	Black plastic
Supplied with	Lockcase, face plate, strike plate, plastic splinter guard and fixings
Accessories	See lockcases accessories section for items such as intumescent kit and fixing packs

Dimensions

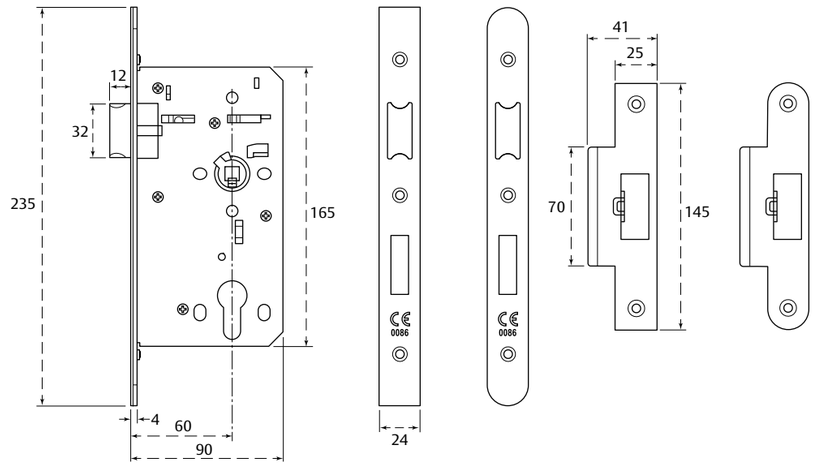

How to order

Order code	Description	Backset	Finish
JHD72LA-S-SS60	DIN latch, with square faceplate	60mm	SS
JHD72LA-R-SS60	DIN latch, with radius faceplate	60mm	SS

ASSA ABLOY
Opening Solutions

HD72WC bathroom lock

Heavy duty DIN mortice bathroom lock.

Features and benefits

- The bathroom follower is 8mm but is supplied with an adaptor to accept a 5mm spindle allowing turn and emergency releases to work with either a 5mm or 8mm
- Durable latch follower technology cycle tested to 3.5 million operations
- Deadbolt tested to 50,000 cycles
- For use in high frequency areas with little incentive to exercise care with use
- Meets the requirements of Approved Document M and Equality Act 2010

Classification code

3	X	8	1	0	G	1	B	G	2	0
(1/3)	(A-X)	(1-9)	(0/1)	(0/1)	(0-G)	(1-7)	(ABU)	(0-H)	(0-4)	(0-H)

EN 12209:2003

Testing and certification

UKCA / CE marked	Yes
Certified in compliance with	EN 12209, EN 1634-1, BS 8300
Suitable for fire doors	Timber FD30/FD60, metal FD240
Certifire approval	Yes
Guarantee	15 years

Specification

Inner forend	Radius
Faceplate	Square or radius
Lever furniture fixing points	Accepts 38mm bolt-through fixing points
Reversible latch / handing	Yes
Angle of lever operation	35°
Furniture	For use with sprung and unsprung door furniture up to 930g per pair
Cylinder compatibility	Indicator / thumb turn (5mm follower)
Backset	60mm
Follower	8mm
Dimensions (D x H x W)	90 x 165 x 16mm
Centre distance	78mm
Deadbolt throw	20mm single throw
Faceplate size	24mm
Latch and deadbolt finish	Steel chrome plated (Not SCP – satin chrome plated)
Case material finish	Heavy duty mild steel enclosed with silver finish
Faceplate and strike plate finish	SS (grade 304)
Splinter guard	Black plastic
Supplied with	Lockcase, face plate, strike plate, plastic splinter guard, fixings and spindle converter
Accessories	See lockcases accessories section for items such as intumescent kit and fixing packs

Dimensions

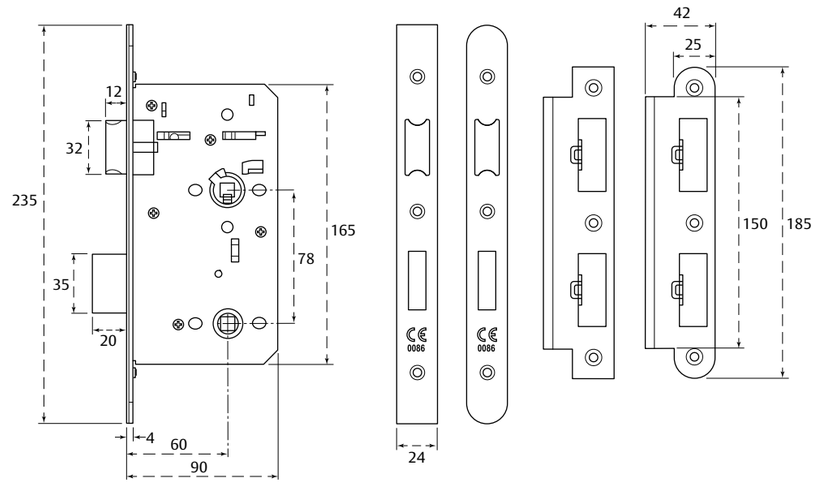

How to order

Order code	Description	Backset	Finish
JHD72WC-S-SS60	DIN bathroom lock, with square faceplate	60mm	SS
JHD72WC-R-SS60	DIN bathroom lock, with radius faceplate	60mm	SS

ASSA ABLOY
Opening Solutions

HD72DNL Euro profile deadlocking nightlatch

Heavy duty DIN Euro profile cylinder mortice deadlocking nightlatch.

Features and benefits

- Latchbolt is automatically locked against end pressure by the anti-thrust bolt
- Durable latch follower technology cycle tested to 3.5 million operations
- For use in high frequency areas with little incentive to exercise care with use
- Two piece faceplate provides clean aesthetics and easy maintenance
- Meets the requirements of Approved Document M and Equality Act 2010

Classification code

3	X	8	1	0	G	1	B	B	2	0
(1/3)	(A-X)	(1-9)	(0/1)	(0/1)	(0-G)	(1-7)	(ABU)	(0-H)	(0-4)	(0-H)

EN 12209:2003

Testing and certification

UKCA / CE marked	Yes
Certified in compliance with	EN 12209, EN 1634-1, BS 8300
Suitable for fire doors	Timber FD30/FD60, metal FD240
Certifire approval	Yes
Guarantee	15 years

Specification

Inner forend	Radius
Faceplate	Square or radius
Lever furniture fixing points	Accepts 38mm bolt-through fixing points
Reversible latch / handing	Yes
Angle of lever operation	35°
Furniture	For use with sprung and unsprung door furniture up to 930g per pair
Cylinder compatibility	Euro profile - single, double or cylinder with thumb turn
Backset	60mm
Follower	8mm
Dimensions (D x H x W)	90 x 165 x 16mm
Centre distance	72mm
Deadbolt throw	20mm single throw
Faceplate size	24mm
Latch and deadbolt finish	Steel chrome plated
Case material finish	Heavy duty mild steel enclosed with silver finish
Faceplate and strike plate finish	SS (grade 304)
Splinter guard	Black plastic
Supplied with	Lockcase, face plate, strike plate, plastic splinter guard and fixings
Accessories	See lockcases accessories section for items such as intumescent kit and fixing packs

Dimensions

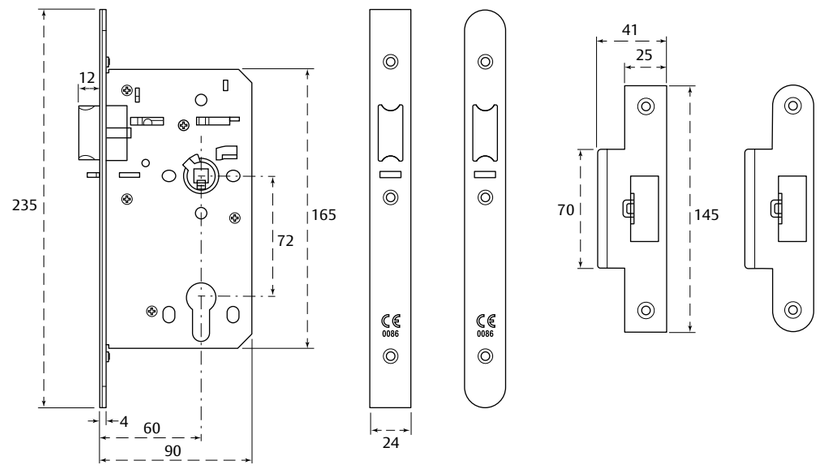

How to order

Order code	Description	Backset	Finish
JHD72DNL-S-SS60	DIN deadlocking nightlatch, with square faceplate	60mm	SS
JHD72DNL-R-SS60	DIN deadlocking nightlatch, with radius faceplate	60mm	SS

ASSA ABLOY
Opening Solutions

HD72ESL Euro profile escape sashlock

Heavy duty DIN Euro profile cylinder mortice escape sashlock.

Features and benefits

- Tested in accordance with EN 179:2008 emergency exit devices when used with the J1000 01 lever handle
- Durable latch follower technology cycle tested to 3.5 million operations
- For use in high frequency areas with little incentive to exercise care with use
- Two piece faceplate provides clean aesthetics and easy maintenance
- Meets the requirements of Approved Document M and Equality Act 2010

Classification code

3	X	8	1	0	G	3	B	A	2	0
(1/3)	(A-X)	(1-9)	(0/1)	(0/1)	(0-G)	(1-7)	(ABU)	(0-H)	(0-4)	(0-H)

EN 12209:2003

Classification code

3	7	6	B	1	3	4	2	A	B/D
(3)	(6-7)	(5-7)	(0/A/B)	(1)	(3-4)	(2-5)	(1-2)	(A/B)	(A-D)

EN 179 :2008

Testing and certification

UKCA / CE marked	Yes
Certified in compliance with	EN 12209, EN 1634-1, EN 179 only when used with J1000 01 lever handle, BS 8300
Suitable for fire doors	Timber FD30/FD60, metal FD240
Certifire approval	Yes
Guarantee	15 years

Specification

Inner forend	Radius
Faceplate	Square or radius
Lever furniture fixing points	Accepts 38mm bolt-through fixing points
Reversible latch / handing	Yes
Angle of lever operation	35°
Furniture	For use with sprung and unsprung door furniture up to 930g per pair
Cylinder compatibility	Euro profile – single, double or cylinder with thumb turn
Backset	60mm
Follower	8mm
Dimensions (D x H x W)	90 x 165 x 16mm
Centre distance	72mm
Deadbolt throw	20mm single throw
Faceplate size	24mm
Latch and deadbolt finish	Steel chrome plated
Case material finish	Heavy duty mild steel enclosed with silver finish
Faceplate and strike plate finish	SS (grade 304)
Splinter guard	Black plastic
Supplied with	Lockcase, face plate, strike plate, plastic splinter guard, fixings and split spindle
Accessories	See lockcase accessories section for items such as intumescent kits and fixing packs. See door furniture section for J-1000RRU01SS/J-1000RRS01SS handle set to suit EN 179

Dimensions

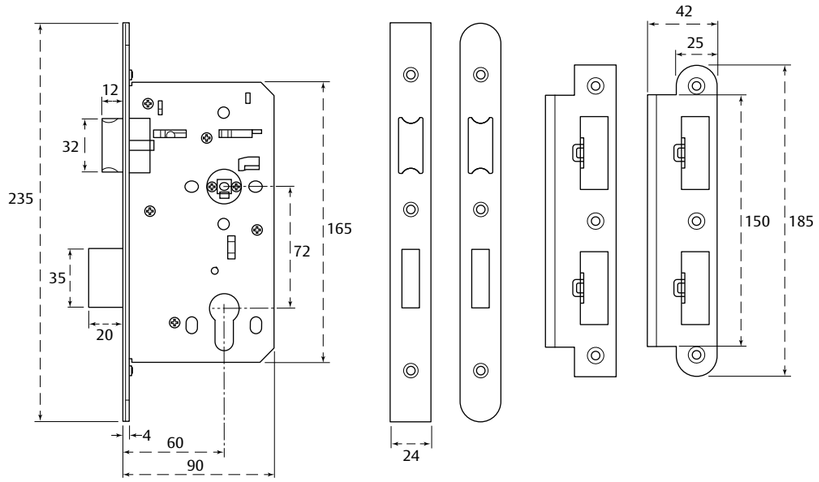

How to order

Order code	Description	Backset	Finish
JHD72ESL-S-SS60	DIN escape sashlock, with square faceplate	60mm	SS
JHD72ESL-R-SS60	DIN escape sashlock, with radius faceplate	60mm	SS

Scandinavian lockcases

High quality and longevity is guaranteed as the range has been successfully cycle tested to 2.3 million cycles which far exceeds the EN 12209 standard requirement of 200,000 cycles.

Offering a variety of lock functionalities, these high security, robust locks are ideal for high usage areas. They are typically found in schools, hospitals, care homes, public buildings, shopping centres, leisure centres, offices and universities, as they are engineered for smooth performance over many years.

Larger lock centres allow more room to manoeuvre making the range ideal for inclusive design applications. The improved building accessibility for less-able persons makes it suitable for schools, care homes and hospitals.

Features and benefits

- Cylinder master keying for access control with replacement cylinders if the keys are lost or stolen (cylinders supplied separately, see cylinder section for more details on Scandinavian ranges)
- Heavy sprung follower allows for the use of unsprung furniture and heavy use over time
- Choice of key, turn or handle arrangement with the key being easy to remove in locked or unlocked position
- Available with radius faceplate for installation using CNC machinery
- Guided 21mm deadbolt – 3 piece hardened steel laminated for additional strength and improved performance (90˚ turn of key or 360˚ turn for high security)

ASSA ABLOY
Opening Solutions

565 Scandinavian sashlock

Modular sashlock suitable for applications with regular and heavy foot flow.

Features and benefits

- Ideal for high frequency of use by public or others with little incentive to exercise care and with a high chance of misuse
- Hardened steel deadbolt thrown 21mm by 90° turn of key or thumb turn
- Cylinder and accessories can be bolted through the lockcase for added strength
- Key can be removed in locked or unlocked position
- Available with radius faceplate for installation using CNC machinery or square faceplate for on-site fitting
- Accessory sets available to create bathroom locks

Classification code (CE)

3	X	9	1	0	NPD	NPD	NPD	NPD	NPD	NPD
(1/3)	(A-X)	(1-9)	(0/1)	(0/1)	(0-G)	(1-7)	(ABU)	(0-H)	(0-4)	(0-H)

EN 12209:2003

Classification code (Non-CE)

3	X	9	B	0	F	3	0	-	-	-
(1/3)	(A-X)	(1-9)	(0/1)	(0/1)	(0-G)	(1-7)	(ABU)	(0-H)	(0-4)	(0-H)

EN 12209:2016

Testing and certification

UKCA / CE marked	Yes
Certified in compliance with	EN 12209, EN 1634-1, BS 8300 (70mm backset only)
Suitable for fire doors	Timber FD30/FD60, metal FD120
Certifire approval	No
Guarantee	5 years

Specification

Inner forend	N/A
Faceplate	Radius
Lever furniture fixing points	Accepts 30mm bolt-through centres on diagonal (SW/NE)
Reversible latch / handing	Yes
Angle of lever operation	N/A
Furniture	For use with sprung and unsprung door furniture
Cylinder compatibility	Scandinavian oval - single, double or cylinder with thumb turn Scandinavian round
Backset	50, 70mm
Follower	8mm
Dimensions (D x H x W)	74/94 x 150 x 18.5mm
Centre distance	111mm
Deadbolt throw	21mm (with a 90° turn)
Faceplate size	22mm
Latch and deadbolt finish	Latch – Bright zinc Deadbolt – Hardened steel, bright zinc
Case material finish	Zinc plated steel
Faceplate and strike plate finish	BZ
Splinter guard	No
Supplied with	Lockcase with faceplate, 2864-1 strike plate and fixings
Accessories	See lockcases accessories section for items such as intumescent kit and additional strike plates See door furniture section for items such as lever handles (Scanflex/Classic/Distinction/Ruko-line ranges) and 263 accessory set

Dimensions

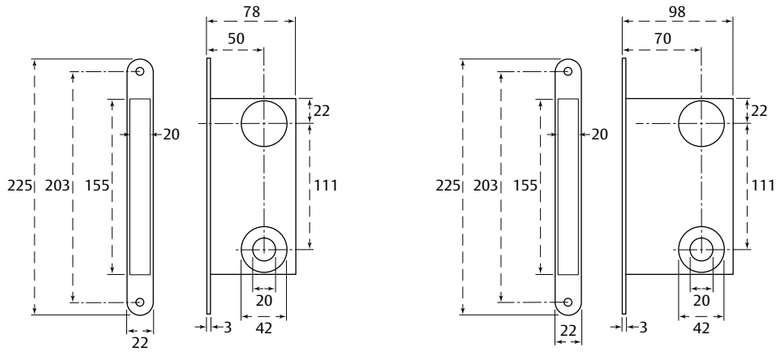

How to order

Order code	Description	Backset	Finish
469106163057	565 Sashlock	50mm	BZ
469106333057	565 Sashlock, monitored	50mm	BZ
803070163057	565 Sashlock	70mm	BZ
804814353057	565 Sashlock, monitored	70mm	BZ

ASSA ABLOY
Opening Solutions

8765 Scandinavian high security sashlock

Modular Scandinavian mortice high security sashlock.

Features and benefits

- High security hardened steel deadbolt thrown 21mm by single 360° turn of key or thumb turn
- Special high security lockcase
- Supplied with high security box strike
- Available with either 50 or 70mm backset

Classification code (CE)

3	X	9	1	0	NPD	NPD	NPD	NPD	NPD	NPD
(1/3)	(A-X)	(1-9)	(0/1)	(0/1)	(0-G)	(1-7)	(ABU)	(0-H)	(0-4)	(0-H)

EN 12209:2003

Classification code (Non-CE)

3	X	9	B	0	F	5	0	-	-	-
(1/3)	(A-X)	(1-9)	(0/1)	(0/1)	(0-G)	(1-7)	(ABU)	(0-H)	(0-4)	(0-H)

EN 12209:2016

Testing and certification

UKCA / CE marked	Yes
Certified in compliance with	EN 12209, EN 1634-1, BS 8300 (70mm backset only)
Suitable for fire doors	Timber FD30/FD60, metal FD120
Certifire approval	No
Guarantee	5 years

Specification

Inner forend	N/A
Faceplate	Radius
Lever furniture fixing points	30mm NE/SW bolt through fixing points
Reversible latch / handing	Yes
Angle of lever operation	N/A
Furniture	For use with sprung and unsprung door furniture
Cylinder compatibility	Scandinavian oval - single, double or cylinder with thumb turn Scandinavian round
Backset	50, 70mm
Follower	8mm
Dimensions (D x H x W)	74/94 x 150 x 18.5mm
Centre distance	111mm
Deadbolt throw	21mm (with a 360° turn)
Faceplate size	22mm
Latch and deadbolt finish	Latch – Bright zinc Deadbolt – Hardened steel, bright zinc
Case material finish	Zinc plated steel
Faceplate and strike plate finish	BZ
Splinter guard	No
Supplied with	Lockcase with faceplate, 1887-1 strike plate and fixings
Accessories	See lockcases accessories section for items such as intumescent kit for timber and additional strike plates See door furniture section for items such as lever handles (Scanflex/Classic/Distinction/ Ruko-line ranges) and 263 toilet accessory

Dimensions

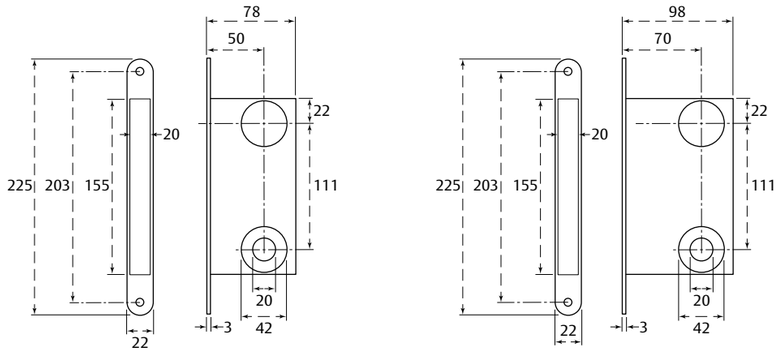

How to order

Order code	Description	Backset	Finish
469105163057	8765 High security sashlock	50mm	BZ
469105353057	8765 High security sashlock, monitored	50mm	BZ
804814163057	8765 High security sashlock	70mm	BZ
804814353057	8765 High security sashlock, monitored	70mm	BZ

ASSA ABLOY
Opening Solutions

2000 Scandinavian special sashlock

Modular Scandinavian mortice special sashlock.

Features and benefits

- For external doors on houses
- Allows for free escape in a fire, with the lock preventing intruders opening the door from the outside
- Cylinder and accessories bolt through the lockcase for strength
- Latchbolt reversible without opening lockcase

Classification code (CE)

3	X	9	1	0	NPD	NPD	NPD	NPD	NPD	NPD
(1/3)	(A-X)	(1-9)	(0/1)	(0/1)	(0-G)	(1-7)	(ABU)	(0-H)	(0-4)	(0-H)

EN 12209:2003

Classification code (Non-CE)

3	X	9	B	0	F	5	0	-	-	-
(1/3)	(A-X)	(1-9)	(0/1)	(0/1)	(0-G)	(1-7)	(ABU)	(0-H)	(0-4)	(0-H)

EN 12209:2016

Testing and certification

UKCA / CE marked	Yes
Certified in compliance with	EN 12209, EN 1634-1
Suitable for fire doors	Timber FD30/FD60, metal FD120
Certifire approval	No
Guarantee	5 years

Specification

Inner forend	N/A
Faceplate	Radius
Lever furniture fixing points	30mm NE/SW bolt through fixing points
Reversible latch / handing	Yes
Angle of lever operation	N/A
Furniture	For use with sprung and unsprung door furniture
Cylinder compatibility	Scandinavian oval - single, double or cylinder with thumb turn Scandinavian round
Backset	50mm
Follower	8mm
Dimensions (D x H x W)	74 x 150 x 18.5mm
Centre distance	111mm
Deadbolt throw	21mm
Faceplate size	22mm
Latch and deadbolt finish	Latch – Bright zinc Deadbolt – Hardened steel, bright zinc
Case material finish	Zinc plated steel
Faceplate and strike plate finish	BZ
Splinter guard	No
Supplied with	Lockcase with faceplate, 1887-1 strike plate and fixings
Accessories	See lockcases accessories section for items such as intumescent kit for timber and additional strike plates See door furniture section for items such as lever handles (Scanflex/Classic/Distinction/Ruko-line ranges) and 263 toilet accessory set

Dimensions

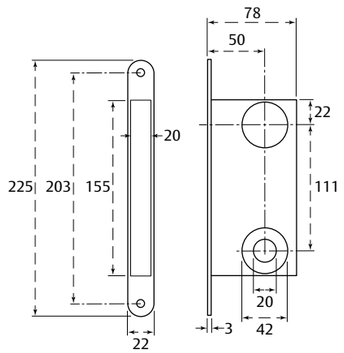

How to order

Order code	Description	Backset	Finish
802588163057	2000 Special sashlock	50mm	BZ

ASSA ABLOY
Opening Solutions

1498 Scandinavian latch

Modular Scandinavian mortice latch.

Features and benefits

- Latch for inner doors where locking is not required
- Comes complete with striking plate
- Latchbolt reversible without opening lockcase
- Available with either 50mm or 70mm backset

Classification code (CE)

3	X	9	1	0	NPD	NPD	NPD	NPD	NPD	NPD
(1/3)	(A-X)	(1-9)	(0/1)	(0/1)	(0-G)	(1-7)	(ABU)	(0-H)	(0-4)	(0-H)

EN 12209:2003

Classification code (Non-CE)

3	X	9	B	0	F	1	0	-	-	-
(1/3)	(A-X)	(1-9)	(0/1)	(0/1)	(0-G)	(1-7)	(ABU)	(0-H)	(0-4)	(0-H)

EN 12209:2016

Testing and certification

UKCA / CE marked	Yes
Certified in compliance with	EN 12209, EN 1634-1, BS 8300 (70mm backset only)
Suitable for fire doors	Timber FD30/FD60, metal FD120
Certifire approval	No
Guarantee	5 years

Specification

Inner forend	N/A
Faceplate	Radius
Lever furniture fixing points	30mm NE/SW bolt through fixing points
Reversible latch / handing	Yes
Angle of lever operation	N/A
Furniture	For use with sprung and unsprung door furniture
Cylinder compatibility	N/A
Backset	50, 70mm
Follower	8mm
Dimensions (D x H x W)	74/94 x 150 x 18.5mm
Centre distance	N/A
Deadbolt throw	N/A
Faceplate size	22mm
Latch and deadbolt finish	Latch – Bright zinc Deadbolt – N/A
Case material finish	Zinc plated steel
Faceplate and strike plate finish	BZ
Splinter guard	No
Supplied with	Lockcase with faceplate, 2864-1 strike plate and fixings
Accessories	See lockcases accessories section for items such as intumescent kit for timber and additional strike plates See door furniture section for items such as lever handles (Scanflex/Classic/ Distinction/ Ruko-line ranges)

Dimensions

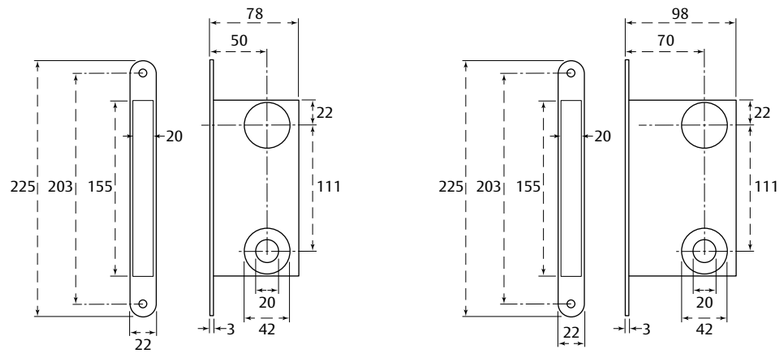

How to order

Order code	Description	Backset	Finish
469119163057	1498 Latch	50mm	BZ
803061163057	1498 Latch	70mm	BZ

ASSA ABLOY
Opening Solutions

2588 Scandinavian deadlock

Modular Scandinavian mortice deadlock.

Features and benefits

- Locks for entrance doors, corridor and other swing doors with door pulls and push plates
- Cylinder and accessories bolt through lockcase for added strength
- Hardened steel deadbolt thrown 21mm by 90° turn of key or thumb turn

Classification code (CE)

3	NPD	9	1	0	NPD	NPD	NPD	NPD	NPD	NPD
(1/3)	(A-X)	(1-9)	(0/1)	(0/1)	(0-G)	(1-7)	(ABU)	(0-H)	(0-4)	(0-H)

EN 12209:2003

Classification code (Non-CE)

3	NPD	9	B	0	F	3	0	-	-	-
(1/3)	(A-X)	(1-9)	(0/1)	(0/1)	(0-G)	(1-7)	(ABU)	(0-H)	(0-4)	(0-H)

EN 12209:2016

Testing and certification

UKCA / CE marked	Yes
Certified in compliance with	EN 12209, EN 1634-1, BS 8300 (70mm backset only)
Suitable for fire doors	Timber FD30/FD60, metal FD120
Certifire approval	No
Guarantee	5 years

Specification

Inner forend	N/A
Faceplate	Radius
Lever furniture fixing points	N/A
Reversible latch / handing	N/A
Angle of lever operation	N/A
Furniture	Push plate / pull handle
Cylinder compatibility	Scandinavian oval - single, double or cylinder with thumb turn Scandinavian round
Backset	50, 70mm
Follower	N/A
Dimensions (D x H x W)	74/94 x 150 x 18.5mm
Centre distance	N/A
Deadbolt throw	21mm with a 90° turn
Faceplate size	22mm
Latch and deadbolt finish	Latch – N/A Deadbolt – Hardened steel, bright zinc
Case material finish	Zinc plated steel
Faceplate and strike plate finish	BZ
Splinter guard	No
Supplied with	Lockcase with faceplate, 2864-1 strike plate and fixings
Accessories	See lockcases accessories section for items such as intumescent kit for timber doors and additional strike plates

Dimensions

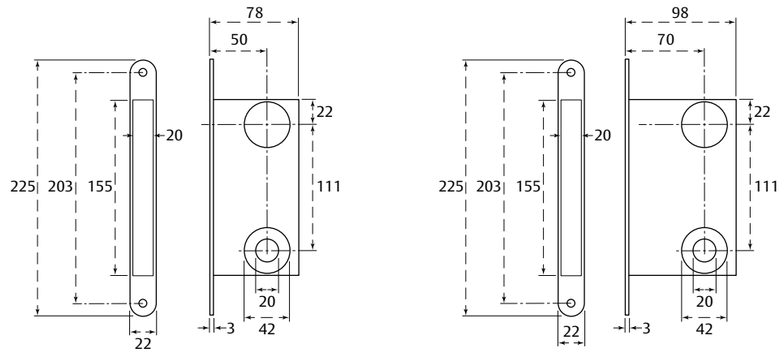

How to order

Order code	Description	Backset	Finish
469114167057	2588 Deadlock	50mm	BZ
803128647057	2588 Deadlock, monitored	50mm	BZ
803128167057	2588 Deadlock	70mm	BZ

ASSA ABLOY
Opening Solutions

9788 Scandinavian high security deadlock

Modular Scandinavian high security mortice deadlock.

Features and benefits

- High security hardened steel deadbolt thrown 21mm by single 360° turn of key or thumb turn
- Locks for entrance doors, corridor and other swing doors with door pulls and push plates
- Key can be removed in locked or unlocked position

Classification code (CE)

3	NPD	9	1	0	NPD	NPD	NPD	NPD	NPD	NPD
(1/3)	(A-X)	(1-9)	(0/1)	(0/1)	(0-G)	(1-7)	(ABU)	(0-H)	(0-4)	(0-H)

EN 12209:2003

Classification code (Non-CE)

3	NPD	9	B	0	F	5	0	-	-	-
(1/3)	(A-X)	(1-9)	(0/1)	(0/1)	(0-G)	(1-7)	(ABU)	(0-H)	(0-4)	(0-H)

EN 12209:2016

Testing and certification

UKCA / CE marked	Yes
Certified in compliance with	EN 12209, EN 1634-1, BS 8300 (70mm backset only)
Suitable for fire doors	Timber FD30/FD60, metal FD120
Certifire approval	No
Guarantee	5 years

Specification

Inner forend	N/A
Faceplate	Radius
Lever furniture fixing points	N/A
Reversible latch / handing	N/A
Angle of lever operation	N/A
Furniture	Push plate / pull handle
Cylinder compatibility	Scandinavian oval - single, double or cylinder with thumb turn Scandinavian round
Backset	50, 70mm
Follower	N/A
Dimensions (D x H x W)	74/94 x 150 x 18.5mm
Centre distance	111mm
Deadbolt throw	21mm with a 360° turn
Faceplate size	22mm
Latch and deadbolt finish	Latch – N/A Deadbolt – Hardened steel, bright zinc
Case material finish	Zinc plated steel
Faceplate and strike plate finish	BZ
Splinter guard	No
Supplied with	Lockcase with faceplate, 2864-1 strike plate and fixings
Accessories	See lockcases accessories section for items such as intumescent kit for timber doors and additional strike plates

Dimensions

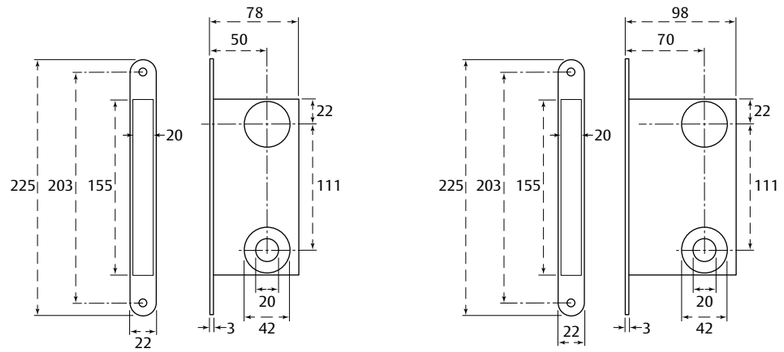

How to order

Order code	Description	Backset	Finish
469109167057	9788 High security deadlock	50mm	BZ
469109357057	9788 High security deadlock, monitored	50mm	BZ
806472167057	9788 High security deadlock	70mm	BZ
806472357057	9788 High security deadlock, monitored	70mm	BZ

ASSA ABLOY
Opening Solutions

6585 Scandinavian nightlatch without lock-back

Modular Scandinavian mortice nightlatch without lock-back.

Features and benefits

- Locks for entrance doors where automatic locking is required when the door is closed
- Key can only be removed in locked position
- Bolt deadlocks automatically when the door is closed
- Available with either 50mm or 70mm backset

Classification code (CE)

3	X	9	1	0	NPD	NPD	NPD	NPD	NPD	NPD
(1/3)	(A-X)	(1-9)	(0/1)	(0/1)	(0-G)	(1-7)	(ABU)	(0-H)	(0-4)	(0-H)

EN 12209:2003

Classification code (Non-CE)

3	X	9	B	0	F	2	0	-	-	-
(1/3)	(A-X)	(1-9)	(0/1)	(0/1)	(0-G)	(1-7)	(ABU)	(0-H)	(0-4)	(0-H)

EN 12209:2016

Testing and certification

UKCA / CE marked	Yes
Certified in compliance with	EN 12209, EN 1634-1, BS 8300 (70mm backset only)
Suitable for fire doors	Timber FD30/FD60, metal FD120
Certifire approval	No
Guarantee	5 years

Specification

Inner forend	N/A
Faceplate	Radius
Lever furniture fixing points	30mm NE/SW bolt through fixing points
Reversible latch / handing	Yes
Angle of lever operation	N/A
Furniture	For use with sprung and unsprung door furniture
Cylinder compatibility	Scandinavian oval - single, double or cylinder with thumb turn Scandinavian round
Backset	50, 70mm
Follower	8mm
Dimensions (D x H x W)	74/94 x 150 x 18.5mm
Centre distance	111mm
Deadbolt throw	N/A
Faceplate size	22mm
Latch and deadbolt finish	Latch – Bright zinc Deadbolt – N/A
Case material finish	Zinc plated steel
Faceplate and strike plate finish	BZ
Splinter guard	No
Supplied with	Lockcase with faceplate, 2864-1 strike plate and fixings
Accessories	See lockcases accessories section for items such as intumescent kit for timber doors and additional strike plates See door furniture section for items such as lever range (Scanflex/Classic/Distinction/ Ruko-line ranges)

Dimensions

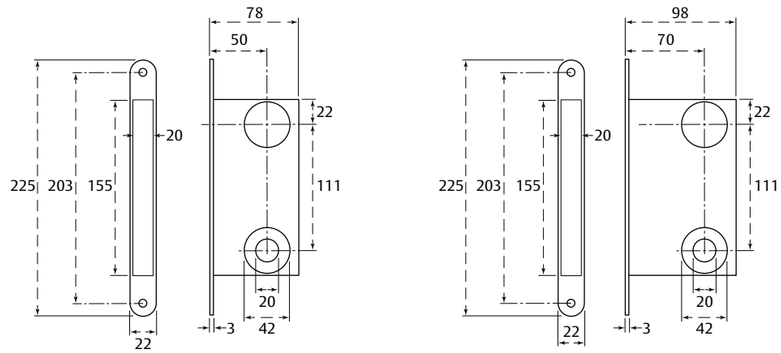

How to order

Order code	Description	Backset	Finish
469329163057	6585 Nightlatch	50mm	BZ
469329333057	6585 Nightlatch, monitored	50mm	BZ
816216103057	6585 Nightlatch	70mm	BZ

ASSA ABLOY
Opening Solutions

5584 Scandinavian nightlatch with snib lock-back

Modular Scandinavian mortice nightlatch with snib lock-back.

Features and benefits

- Locks for entrance doors where automatic locking is required when door is closed
- Key can only be removed in locked or locked back position
- Latchbolt reversible without opening lockcase
- Bolt deadlocks automatically when door is closed
- Snib for locking bolt into lockcase

Classification code (Non-CE)

3	X	9	1	0	NPD	NPD	NPD	NPD	NPD	NPD
(1/3)	(A-X)	(1-9)	(0/1)	(0/1)	(0-G)	(1-7)	(ABU)	(0-H)	(0-4)	(0-H)

EN 12209:2003

Classification code (Non-CE)

3	X	9	B	0	F	2	0	-	-	-
(1/3)	(A-X)	(1-9)	(0/1)	(0/1)	(0-G)	(1-7)	(ABU)	(0-H)	(0-4)	(0-H)

EN 12209:2016

5 YEAR GUARANTEE

EPD®

Testing and certification

UKCA / CE marked	No
Certified in compliance with	EN 12209
Suitable for fire doors	No
Certifire approval	No
Guarantee	5 years

Specification

Inner forend	N/A
Faceplate	Radius
Lever furniture fixing points	30mm NE/SW bolt through fixing points
Reversible latch / handing	Yes
Angle of lever operation	N/A
Furniture	For use with sprung and unsprung door furniture
Cylinder compatibility	Scandinavian oval - single, double or cylinder with thumb turn Scandinavian round
Backset	50mm
Follower	8mm
Dimensions (D x H x W)	74 x 150 x 18.5mm
Centre distance	111mm
Deadbolt throw	N/A
Faceplate size	22mm
Latch and deadbolt finish	Latch – Bright zinc Deadbolt – N/A
Case material finish	Zinc plated steel
Faceplate and strike plate finish	BZ
Splinter guard	No
Supplied with	Lockcase with faceplate, 2864-1 strike plate and fixings
Accessories	See lockcases accessories section for items such as additional strike plates See door furniture section for items such as lever range (Scanflex/Classic/Distinction/ Ruko-line ranges)

Dimensions

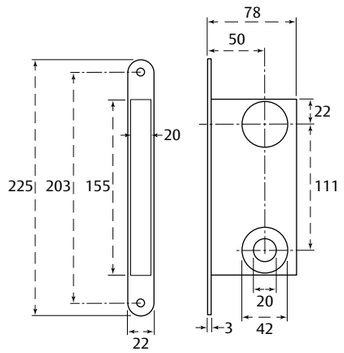

How to order

Order code	Description	Backset	Finish
469173163057	5584 Nightlatch	50mm	BZ
469173333057	5584 Nightlatch monitored	50mm	BZ

ASSA ABLOY
Opening Solutions

6580 Scandinavian nightlatch with key lock-back, non-deadlocking

Modular Scandinavian mortice nightlatch with key lock-back, non-deadlocking.

Features and benefits

- Locks for entrance doors where automatic locking is required when door is closed
- Cylinder and accessories bolt through lockcase for added strength
- No automatic deadlocking
- Key for locking bolt into lockcase

Classification code (CE)

3	X	9	1	0	NPD	NPD	NPD	NPD	NPD	NPD
(1/3)	(A-X)	(1-9)	(0/1)	(0/1)	(0-G)	(1-7)	(ABU)	(0-H)	(0-4)	(0-H)

EN 12209:2003

Classification code (Non-CE)

3	X	9	B	0	F	2	0	-	-	-
(1/3)	(A-X)	(1-9)	(0/1)	(0/1)	(0-G)	(1-7)	(ABU)	(0-H)	(0-4)	(0-H)

EN 12209:2016

5 YEAR GUARANTEE

EPD®

Testing and certification

UKCA / CE marked	No
Certified in compliance with	EN 12209, BS 8300 (70mm backset only)
Suitable for fire doors	No
Certifire approval	No
Guarantee	5 years

Specification

Inner forend	N/A
Faceplate	Radius
Lever furniture fixing points	30mm NE/SW bolt through fixing points
Reversible latch / handing	Yes
Angle of lever operation	N/A
Furniture	For use with sprung and unsprung door furniture
Cylinder compatibility	Scandinavian oval - single, double or cylinder with thumb turn Scandinavian round
Backset	50, 70mm
Follower	8mm
Dimensions (D x H x W)	74/94 x 150 x 18.5mm
Centre distance	111mm
Deadbolt throw	N/A
Faceplate size	22mm
Latch and deadbolt finish	Latchbolt – Bright zinc Deadbolt – N/A
Case material finish	Zinc plated steel
Faceplate and strike plate finish	BZ
Splinter guard	No
Supplied with	Lockcase with faceplate, 2864-1 strike plate and fixings
Accessories	See lockcases accessories section for items such as additional strike plates See door furniture section for items such as lever range (Scanflex/Classic/ Distinction/ Ruko-line ranges)

Dimensions

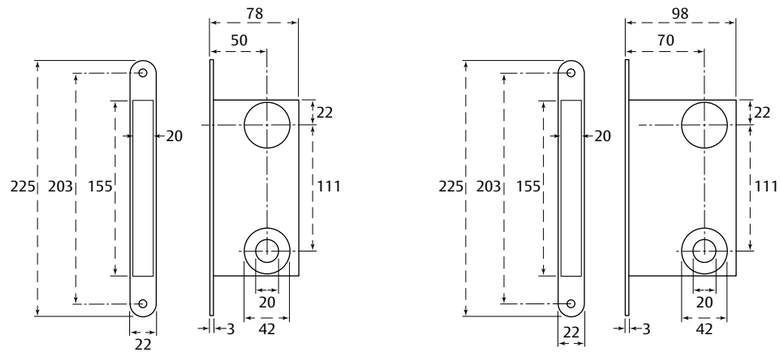

How to order

Order code	Description	Backset	Finish
469179163057	6580 Nightlatch	50mm	BZ
469179333057	6580 Nightlatch, monitored	50mm	BZ
816215163057	6580 Nightlatch	70mm	BZ

ASSA ABLOY
Opening Solutions

5565 Scandinavian triple latching sets

Modular Scandinavian mortice triple latch sashlock.

Features and benefits

- Latchbolt is extended to 16mm to ensure 13mm engagement in the striking plate
- Lever handles designed to droop if latchbolts not fully engaged in striking plate, alerting user to unsecure door
- Each latchbolt follower is fitted with an additional arm incorporating a stub so the latches can be operated simultaneously with a single central lever handle

5 YEAR GUARANTEE

EPD®

Testing and certification

UKCA / CE marked	No
Certified in compliance with	No
Suitable for fire doors	No
Certifire approval	No
Guarantee	5 years

Specification

Inner forend	N/A
Faceplate	Radius
Lever furniture fixing points	30mm NE/SW bolt through fixing points
Reversible latch / handing	Yes
Angle of lever operation	N/A
Furniture	For use with sprung and unsprung door furniture
Cylinder compatibility	Scandinavian oval - single, double or cylinder with thumb turn Scandinavian round
Backset	50mm
Follower	8mm
Dimensions (D x H x W)	74 x 150 x 18.5mm
Centre distance	111mm
Deadbolt throw	21mm
Faceplate size	22mm
Latch and deadbolt finish	Latchbolt – Bright zinc Deadbolt – Hardened steel
Case material finish	Zinc plated steel
Faceplate and strike plate finish	BZ
Splinter guard	No
Supplied with	Lockcase with faceplate, 2864-1 strike plate and fixings
Accessories	See lockcases accessories section for items such as additional strike plates See door furniture section for items such as lever range (Scanflex/Classic/ Distinction/ Ruko-line ranges)

Dimensions

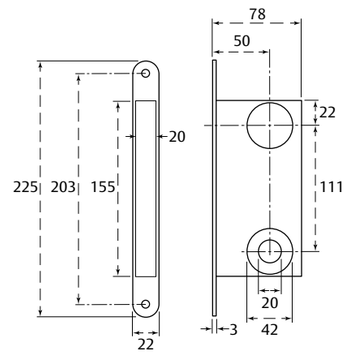

How to order

Order code	Description	Backset	Finish
803149163057	5565 Triple latching set	50mm	BZ

ASSA ABLOY
Opening Solutions

1560 Scandinavian double nightlatch without lock-back

Modular Scandinavian mortice double nightlatch without lock-back.

Features and benefits

- Locks suitable for classroom doors, offices, industrial premises and apartments
- Key can only be removed in locked position
- Upper bolt deadlocks automatically when door is closed
- No locking of upper bolt into lockcase
- Lower bolt is operated by lever handle

Classification code (CE)

3	X	9	1	0	NPD	NPD	NPD	NPD	NPD	NPD
(1/3)	(A-X)	(1-9)	(0/1)	(0/1)	(0-G)	(1-7)	(ABU)	(0-H)	(0-4)	(0-H)

EN 12209:2003

Classification code (Non-CE)

3	X	9	B	0	F	2	0	-	-	-
(1/3)	(A-X)	(1-9)	(0/1)	(0/1)	(0-G)	(1-7)	(ABU)	(0-H)	(0-4)	(0-H)

EN 12209:2016

Testing and certification

UKCA / CE marked	Yes
Certified in compliance with	EN 12209, EN 1634-1, BS 8300 (70mm backset only)
Suitable for fire doors	Timber FD30/FD60, metal FD120
Certifire approval	No
Guarantee	5 years

Specification

Inner forend	N/A
Faceplate	Radius
Lever furniture fixing points	30mm NE/SW bolt through fixing points
Reversible latch / handing	Yes
Angle of lever operation	N/A
Furniture	For use with sprung and unsprung door furniture
Cylinder compatibility	Scandinavian oval - single, double or cylinder with thumb turn Scandinavian round
Backset	50, 70mm
Follower	8mm
Dimensions (D x H x W)	74/94 x 150 x 18.5mm
Centre distance	111mm
Deadbolt throw	N/A
Faceplate size	22mm
Latch and deadbolt finish	Latchbolt – Bright zinc Deadbolt – N/A
Case material finish	Zinc plated steel
Faceplate and strike plate finish	BZ
Splinter guard	No
Supplied with	Lockcase with faceplate, 2864-1 strike plate and fixings
Accessories	See lockcases accessories section for items such as intumescent kit for timber and additional strike plates See door furniture section for items such as lever range (Scanflex/Classic/ Distinction/ Ruko-line ranges)

Dimensions

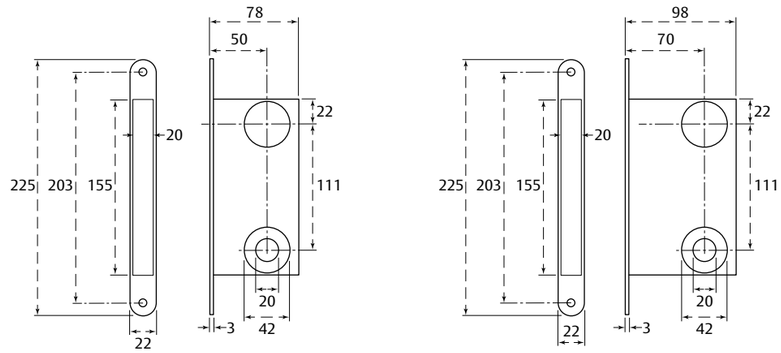

How to order

Order code	Description	Backset	Finish
469171163057	1560 Double nightlatch	50mm	BZ
469171333057	1560 Double nightlatch, monitored	50mm	BZ
816214103057	1560 Double nightlatch	70mm	BZ

ASSA ABLOY
Opening Solutions

560 Scandinavian double nightlatch with snib lock-back

Modular Scandinavian mortice double nightlatch with snib lock-back.

Features and benefits

- Locks suitable for classroom doors, offices, industrial premises and apartments
- Key can only be removed in locked or locked-back position
- Latchbolts reversible without opening lockcase
- Upper bolt deadlocks automatically when door is closed
- Snib for locking the upper bolt into lockcase
- Lower bolt operated by lever handle

Classification code (CE)

3	X	9	1	0	NPD	NPD	NPD	NPD	NPD	NPD
(1/3)	(A-X)	(1-9)	(0/1)	(0/1)	(0-G)	(1-7)	(ABU)	(0-H)	(0-4)	(0-H)

EN 12209:2003

Classification code (Non-CE)

3	X	9	B	0	F	2	0	-	-	-
(1/3)	(A-X)	(1-9)	(0/1)	(0/1)	(0-G)	(1-7)	(ABU)	(0-H)	(0-4)	(0-H)

EN 12209:2016

Testing and certification

UKCA / CE marked	Yes
Certified in compliance with	EN 12209, EN 1634-1, BS 8300 (70mm backset only)
Suitable for fire doors	Timber FD30/FD60, metal FD120
Certifire approval	No
Guarantee	5 years

Specification

Inner forend	N/A
Faceplate	Radius
Lever furniture fixing points	30mm NE/SW bolt through fixing points
Reversible latch / handing	Yes
Angle of lever operation	N/A
Furniture	For use with sprung and unsprung door furniture
Cylinder compatibility	Scandinavian oval - single, double or cylinder with thumb turn Scandinavian round
Backset	50, 70mm
Follower	8mm
Dimensions (D x H x W)	74/94 x 150 x 18.5mm
Centre distance	111mm
Deadbolt throw	N/A
Faceplate size	22mm
Latch and deadbolt finish	Latchbolt – Bright zinc Deadbolt – N/A
Case material finish	Zinc plated steel
Faceplate and strike plate finish	BZ
Splinter guard	No
Supplied with	Lockcase with faceplate, 2864-1 strike plate and fixings
Accessories	See lockcases accessories section for items such as intumescent kit for timber and additional strike plates See door furniture section for items such as lever range (Scanflex/Classic/ Distinction/ Ruko-line ranges)

Dimensions

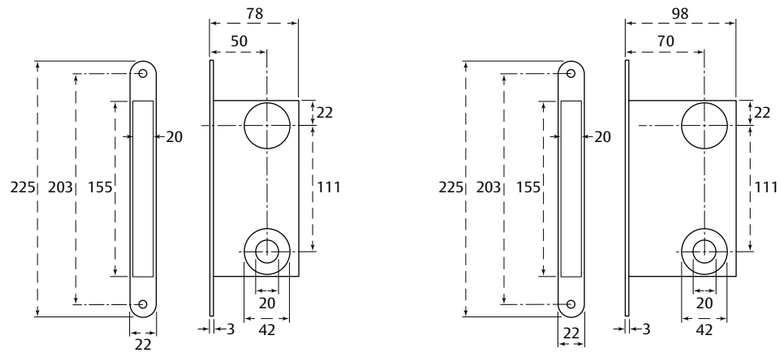

How to order

Order code	Description	Backset	Finish
469160163057	560 Double nightlatch	50mm	BZ
469160333057	560 Double nightlatch, monitored	50mm	BZ
803043163057	560 Double nightlatch	70mm	BZ

ASSA ABLOY
Opening Solutions

562 Scandinavian double nightlatch with key lock-back

Modular Scandinavian mortice double nightlatch with key lock-back.

Features and benefits

- Locks suitable for classroom doors, offices, industrial premises, and apartments
- Upper bolt deadlocks automatically when door is closed
- Key locking of upper bolt into lockcase
- Lower latchbolt operated by lever handle

Classification code (CE)

3	X	9	1	0	NPD	NPD	NPD	NPD	NPD	NPD
(1/3)	(A-X)	(1-9)	(0/1)	(0/1)	(0-G)	(1-7)	(ABU)	(0-H)	(0-4)	(0-H)

EN 12209:2003

Classification code (Non-CE)

3	X	9	B	0	F	2	0	-	-	-
(1/3)	(A-X)	(1-9)	(0/1)	(0/1)	(0-G)	(1-7)	(ABU)	(0-H)	(0-4)	(0-H)

EN 12209:2016

Testing and certification

UKCA / CE marked	Yes
Certified in compliance with	EN 12209, EN 1634-1, BS 8300 (70mm backset only)
Suitable for fire doors	Timber FD30/FD60, metal FD120
Certifire approval	No
Guarantee	5 years

Specification

Inner forend	N/A
Faceplate	Radius
Lever furniture fixing points	30mm NE/SW bolt through fixing points
Reversible latch / handing	Yes
Angle of lever operation	N/A
Furniture	For use with sprung and unsprung door furniture
Cylinder compatibility	Scandinavian oval - single, double or cylinder with thumb turn Scandinavian round
Backset	50, 70mm
Follower	8mm
Dimensions (D x H x W)	74/94 x 150 x 18.5mm
Centre distance	111mm
Deadbolt throw	N/A
Faceplate size	22mm
Latch and deadbolt finish	Latchbolt – Bright zinc Deadbolt – N/A
Case material finish	Zinc plated steel
Faceplate and strike plate finish	BZ
Splinter guard	No
Supplied with	Lockcase with faceplate, 2864-1 strike plate and fixings
Accessories	See lockcases accessories section for items such as intumescent kit for timber and additional strike plates See door furniture section for items such as lever range (Scanflex/Classic/ Distinction/ Ruko-line ranges)

Dimensions

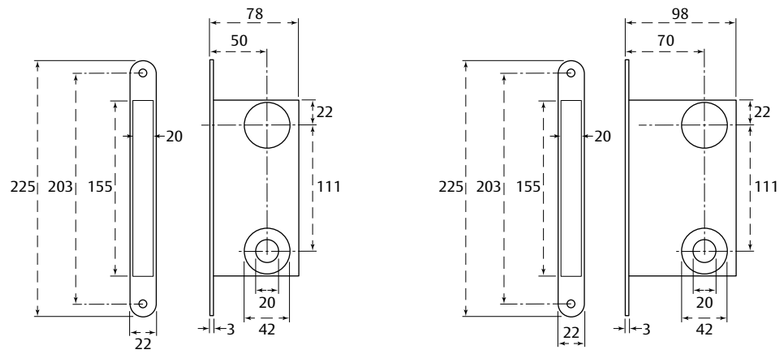

How to order

Order code	Description	Backset	Finish
469169163057	562 Double nightlatch	50mm	BZ
469169333057	562 Double nightlatch, monitored	50mm	BZ
803045103057	562 Double nightlatch	70mm	BZ

ASSA ABLOY
Opening Solutions

8561 Scandinavian emergency nightlatch without lock-back

Modular Scandinavian mortice emergency nightlatch without lock-back.

Features and benefits

- Locks for exit doors offering a high degree of security with unrestricted exit in an emergency
- Ideal solution for hotels, factories, hospitals, schools and offices
- Can be included as part of a total security system, including mechanical and electrical devices such as electric strikes
- Latchbolt deadlocks automatically when door is closed

Classification code (CE)

3	X	9	1	0	NPD	NPD	NPD	NPD	NPD	NPD
(1/3)	(A-X)	(1-9)	(0/1)	(0/1)	(0-G)	(1-7)	(ABU)	(0-H)	(0-4)	(0-H)

EN 12209:2003

Classification code (Non-CE)

3	X	9	B	0	F	2	0	-	-	-
(1/3)	(A-X)	(1-9)	(0/1)	(0/1)	(0-G)	(1-7)	(ABU)	(0-H)	(0-4)	(0-H)

EN 12209:2016

Testing and certification

UKCA / CE marked	Yes
Certified in compliance with	EN 12209, EN 1634-1, BS 8300 (70mm backset only)
Suitable for fire doors	Timber FD30/FD60, metal FD120
Certifire approval	No
Guarantee	5 years

Specification

Inner forend	N/A
Faceplate	Radius
Lever furniture fixing points	30mm NE/SW bolt through fixing points
Reversible latch / handing	Yes
Angle of lever operation	N/A
Furniture	For use with sprung and unsprung door furniture
Cylinder compatibility	Scandinavian oval - single, double or cylinder with thumb turn Scandinavian round
Backset	50, 70mm
Follower	8mm
Dimensions (D x H x W)	74/94 x 150 x 18.5mm
Centre distance	111mm
Deadbolt throw	N/A
Faceplate size	22mm
Latch and deadbolt finish	Latchbolt – Bright zinc Deadbolt – N/A
Case material finish	Zinc plated steel
Faceplate and strike plate finish	BZ
Splinter guard	No
Supplied with	Lockcase with faceplate, 2864-1 strike plate and fixings
Accessories	See lockcases accessories section for items such as intumescent kit for timber and additional strike plates See door furniture section for items such as lever range (Scanflex/Classic/ Distinction/ Ruko-line ranges)

Dimensions

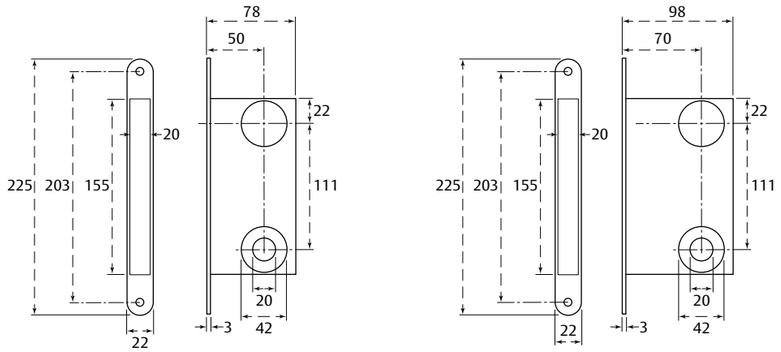

How to order

Order code	Description	Backset	Finish
469177163057	8561 Emergency nightlatch	50mm	BZ
469177353057	8561 Emergency nightlatch, monitored	50mm	BZ
803059163057	8561 Emergency nightlatch	70mm	BZ
803059643057	8561 Emergency nightlatch, monitored	70mm	BZ

ASSA ABLOY
Opening Solutions

8560 Scandinavian emergency light-sprung nightlatch without lock-back

Modular Scandinavian mortice emergency light sprung nightlatch without lock-back.

Features and benefits

- Locks for exit doors offering a high degree of security with unrestricted exit in an emergency
- Can be included as part of a total security system, including mechanical and electrical devices such as electric strikes
- Bolt deadlocks automatically when door is closed
- Emergency exit break dome thumb turn for non-keyholders
- Light sprung for use with turn

Classification code (CE)

3	X	9	1	0	NPD	NPD	NPD	NPD	NPD	NPD
(1/3)	(A-X)	(1-9)	(0/1)	(0/1)	(0-G)	(1-7)	(ABU)	(0-H)	(0-4)	(0-H)

EN 12209:2003

Classification code (Non-CE)

3	X	9	B	0	F	2	0	-	-	-
(1/3)	(A-X)	(1-9)	(0/1)	(0/1)	(0-G)	(1-7)	(ABU)	(0-H)	(0-4)	(0-H)

EN 12209:2016

Testing and certification

UKCA / CE marked	Yes
Certified in compliance with	EN 12209, EN 1634-1, BS 8300 (70mm backset only)
Suitable for fire doors	Timber FD30/FD60
Certifire approval	No
Guarantee	5 years

Specification

Inner forend	N/A
Faceplate	Radius
Lever furniture fixing points	30mm NE/SW bolt through fixing points
Reversible latch / handing	Yes
Angle of lever operation	N/A
Furniture	For use with sprung and unsprung door furniture
Cylinder compatibility	Scandinavian oval - single, double or cylinder with thumb turn Scandinavian round
Backset	50, 70mm
Follower	8mm
Dimensions (D x H x W)	74/94 x 150 x 18.5mm
Centre distance	111mm
Deadbolt throw	N/A
Faceplate size	22mm
Latch and deadbolt finish	Latchbolt – Bright zinc Deadbolt – N/A
Case material finish	Zinc plated steel
Faceplate and strike plate finish	BZ
Splinter guard	No
Supplied with	Lockcase with faceplate, 2864-1 strike plate and fixings
Accessories	See lockcases accessories section for items such as intumescent kit for timber and additional strike plates See door furniture section for items such as lever range (Scanflex/Classic/ Distinction/ Ruko-line ranges)

Dimensions

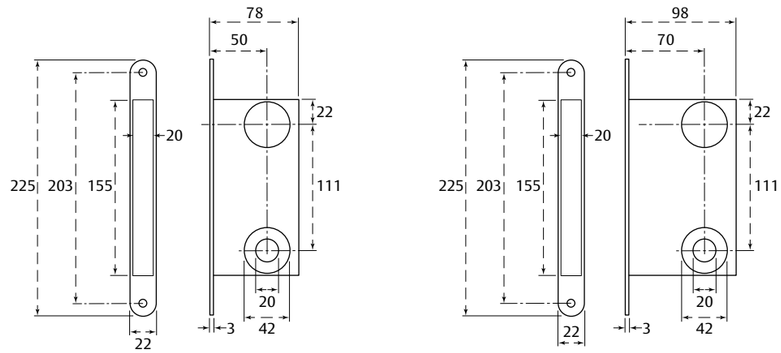

How to order

Order code	Description	Backset	Finish
804055163057	8560 Emergency nightlatch	50mm	BZ
804058163057	8560 Emergency nightlatch	70mm	BZ

ASSA ABLOY
Opening Solutions

8562 Scandinavian emergency nightlatch with key lock-back

Modular Scandinavian mortice emergency nightlatch with key lock-back.

Features and benefits

- Locks for exit doors offering a high degree of security with unrestricted exit in an emergency
- Can be included as part of a total security system, including mechanical and electrical devices such as electric strikes
- Latchbolt automatically deadlocks when the door is closed
- Latchbolt lock-back possible with a special faceplate key
- Ideal where security is not required whilst building is fully occupied (e.g. office hours)

Classification code (Non-CE)

3	X	9	1	0	NPD	NPD	NPD	NPD	NPD	NPD
(1/3)	(A-X)	(1-9)	(0/1)	(0/1)	(0-G)	(1-7)	(ABU)	(0-H)	(0-4)	(0-H)

EN 12209:2003

Classification code (Non-CE)

3	X	9	B	0	F	2	0	-	-	-
(1/3)	(A-X)	(1-9)	(0/1)	(0/1)	(0-G)	(1-7)	(ABU)	(0-H)	(0-4)	(0-H)

EN 12209:2016

5 YEAR GUARANTEE

EPD®

Testing and certification

UKCA / CE marked	No
Certified in compliance with	EN 12209, BS 8300 (70mm backset only)
Suitable for fire doors	No
Certifire approval	No
Guarantee	5 years

Specification

Inner forend	N/A
Faceplate	Radius
Lever furniture fixing points	30mm NE/SW bolt through fixing points
Reversible latch / handing	Yes
Angle of lever operation	N/A
Furniture	For use with sprung and unsprung door furniture
Cylinder compatibility	Scandinavian oval - single, double or cylinder with thumb turn Scandinavian round
Backset	50, 70mm
Follower	8mm
Dimensions (D x H x W)	74/94 x 150 x 18.5mm
Centre distance	111mm
Deadbolt throw	N/A
Faceplate size	22mm
Latch and deadbolt finish	Latchbolt – Bright zinc Deadbolt – N/A
Case material finish	Zinc plated steel
Faceplate and strike plate finish	BZ
Splinter guard	No
Supplied with	Lockcase with faceplate, 2864-1 strike plate and fixings
Accessories	See lockcases accessories section for items such as additional strike plates See door furniture section for items such as lever range (Scanflex/Classic/ Distinction/ Ruko-line ranges)

Dimensions

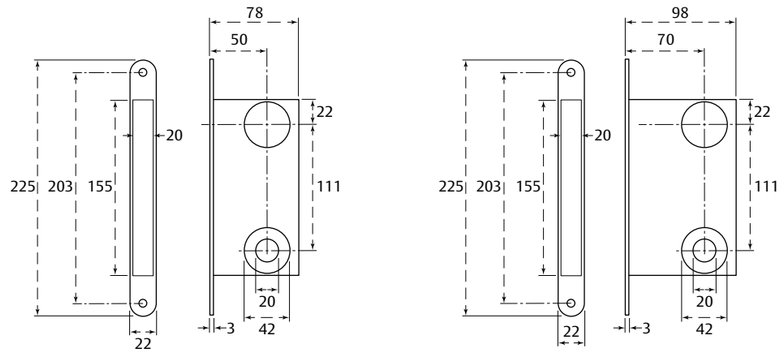

How to order

Order code	Description	Backset	Finish
469379163057	8562 Emergency nightlatch	50mm	BZ
803177163057	8562 Emergency nightlatch	70mm	BZ

ASSA ABLOY
Opening Solutions

8564 Scandinavian emergency light-sprung nightlatch with key lock-back

Modular Scandinavian mortice emergency light sprung nightlatch with key lock-back.

Features and benefits

- Locks for exit doors offering a high degree of security, but with unrestricted exit in an emergency
- Ideally suited for emergency doors in hotels, factories, hospitals, schools and offices
- Can be included as part of a total security system, including mechanical and electrical devices
- Latchbolt automatically deadlocks when the door is closed
- Latchbolt lock-back possible with a special faceplate key
- Ideal where security is not required whilst building is fully occupied (e.g. office hours)

Classification code (Non-CE)

3	X	9	1	0	NPD	NPD	NPD	NPD	NPD	NPD
(1/3)	(A-X)	(1-9)	(0/1)	(0/1)	(0-G)	(1-7)	(ABU)	(0-H)	(0-4)	(0-H)

EN 12209:2003

Classification code (Non-CE)

3	X	9	B	0	F	2	0	-	-	-
(1/3)	(A-X)	(1-9)	(0/1)	(0/1)	(0-G)	(1-7)	(ABU)	(0-H)	(0-4)	(0-H)

EN 12209:2016

5 YEAR GUARANTEE

EPD®

Testing and certification

UKCA / CE marked	No
Certified in compliance with	EN 12209, BS 8300 (70mm backset only)
Suitable for fire doors	No
Certifire approval	No
Guarantee	5 years

Specification

Inner forend	N/A
Faceplate	Radius
Lever furniture fixing points	30mm NE/SW bolt through fixing points
Reversible latch / handing	Yes
Angle of lever operation	N/A
Furniture	For use with sprung and unsprung door furniture
Cylinder compatibility	Scandinavian oval - single, double or cylinder with thumb turn Scandinavian round
Backset	50, 70mm
Follower	8mm
Dimensions (D x H x W)	74/94 x 150 x 18.5mm
Centre distance	111mm
Deadbolt throw	N/A
Faceplate size	22mm
Latch and deadbolt finish	Latchbolt – Bright zinc Deadbolt – N/A
Case material finish	Zinc plated steel
Faceplate and strike plate finish	BZ
Splinter guard	No
Supplied with	Lockcase with faceplate, 2864-1 strike plate and fixings
Accessories	See lockcases accessories section for items such as additional strike plates See door furniture section for items such as lever range (Scanflex/Classic/ Distinction/ Ruko-line ranges)

Dimensions

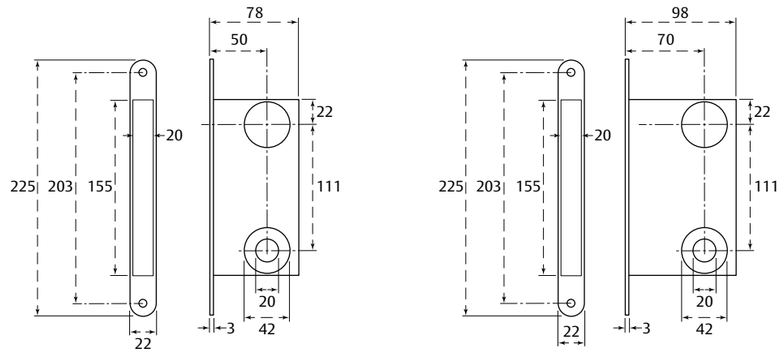

How to order

Order code	Description	Backset	Finish
804082163057	8564 Emergency nightlatch	50mm	BZ
804079163057	8564 Emergency nightlatch	70mm	BZ

500/9 Scandinavian escape double nightlatch with cylinder key lock-back

Modular Scandinavian mortice escape double nightlatch with cylinder key lock-back.

Features and benefits

- Locks for doors where automatic deadlocking is required
- Suitable for classrooms, offices, industrial premises and apartments
- Always provides unrestricted exit facilities
- Split follower locks provide different functions on the inside and outside, and the internal handle follower mechanism is not reversible
- For use when automatic deadlocking is required during controlled periods

Classification code (CE)

3	X	9	1	0	NPD	NPD	NPD	NPD	NPD	NPD
(1/3)	(A-X)	(1-9)	(0/1)	(0/1)	(0-G)	(1-7)	(ABU)	(0-H)	(0-4)	(0-H)

EN 12209:2003

Classification code (Non-CE)

3	X	9	B	0	F	2	0	-	-	-
(1/3)	(A-X)	(1-9)	(0/1)	(0/1)	(0-G)	(1-7)	(ABU)	(0-H)	(0-4)	(0-H)

EN 12209:2016

Testing and certification

UKCA / CE marked	Yes
Certified in compliance with	EN 12209, EN 1634-1, BS 8300 (70mm backset only)
Suitable for fire doors	Timber FD30/FD60, metal FD120
Certifire approval	No
Guarantee	5 years

Specification

Inner forend	N/A
Faceplate	Radius
Lever furniture fixing points	30mm NE/SW bolt through fixing points
Reversible latch / handing	No
Angle of lever operation	N/A
Furniture	For use with sprung and unsprung door furniture
Cylinder compatibility	Scandinavian oval - single, double or cylinder with thumb turn Scandinavian round
Backset	50, 70mm
Follower	8mm
Dimensions (D x H x W)	74/94 x 150 x 18.5mm
Centre distance	111mm
Deadbolt throw	N/A
Faceplate size	22mm
Latch and deadbolt finish	Latchbolt – Bright zinc Deadbolt – N/A
Case material finish	Zinc plated steel
Faceplate and strike plate finish	BZ
Splinter guard	No
Supplied with	Lockcase with faceplate, 2864-1 strike plate and fixings
Accessories	See lockcases accessories section for items such as intumescent kit for timber, split follower and additional strike plates See door furniture section for items such as lever range (Scanflex/Classic/ Distinction/ Ruko-line ranges)

Dimensions

Please see previous product page for dimension drawing.

How to order

Order code	Description	Handing	Backset	Finish
803360165057	500/9 Escape double nightlatch	Left-in	50mm	BZ
803361165057	500/9 Escape double nightlatch	Left-out	50mm	BZ
803361163057	500/9 Escape double nightlatch	Right-in	50mm	BZ
803360163057	500/9 Escape double nightlatch	Right-out	50mm	BZ
803023165057	500/9 Escape double nightlatch	Left-in	70mm	BZ
Price on request	500/9 Escape double nightlatch	Left-out	70mm	BZ
803024163057	500/9 Escape double nightlatch	Right-in	70mm	BZ
803023163057	500/9 Escape double nightlatch	Right-out	70mm	BZ

When specifying these locks, both the door handing and whether the door opens inwards, or outwards must be stated
Please note that the exact type of spindle to specify varies depending on the lever handle range to be used
Special split spindles must be used where lever handles are fitted to split follower locks

ASSA ABLOY
Opening Solutions

500/4 Scandinavian escape double nightlatch with snib lock-back

Modular Scandinavian mortice escape double nightlatch with snib lock-back.

Features and benefits

- Upright mortice locking latch with cylinder outside and blind rose inside
- Upper bolt deadlocks automatically when door is closed
- Snib for locking bolt into lockcase
- Internal handle gives exit at all times

Classification code (CE)

3	X	9	1	0	NPD	NPD	NPD	NPD	NPD	NPD
(1/3)	(A-X)	(1-9)	(0/1)	(0/1)	(0-G)	(1-7)	(ABU)	(0-H)	(0-4)	(0-H)

EN 12209:2003

Classification code (Non-CE)

3	X	9	B	0	F	2	0	-	-	-
(1/3)	(A-X)	(1-9)	(0/1)	(0/1)	(0-G)	(1-7)	(ABU)	(0-H)	(0-4)	(0-H)

EN 12209:2016

Testing and certification

UKCA / CE marked	Yes
Certified in compliance with	EN 12209, EN 1634-1
Suitable for fire doors	Timber FD30/FD60, metal FD120
Certifire approval	No
Guarantee	5 years

Specification

Inner forend	N/A
Faceplate	Radius
Lever furniture fixing points	30mm NE/SW bolt through fixing points
Reversible latch / handing	Yes
Angle of lever operation	N/A
Furniture	For use with sprung and unsprung door furniture
Cylinder compatibility	Scandinavian oval - single, double or cylinder with thumb turn Scandinavian round
Backset	50mm
Follower	8mm
Dimensions (D x H x W)	74 x 150 x 18.5mm
Centre distance	111mm
Deadbolt throw	N/A
Faceplate size	22mm
Latch and deadbolt finish	Latchbolt – Bright zinc Deadbolt – N/A
Case material finish	Zinc plated steel
Faceplate and strike plate finish	BZ
Splinter guard	No
Supplied with	Lockcase with faceplate, 2864-1 strike plate and fixings
Accessories	See lockcases accessories section for items such as intumescent kit for timber, split follower and additional strike plates See door furniture section for items such as lever range (Scanflex/Classic/ Distinction/ Ruko-line ranges)

Dimensions

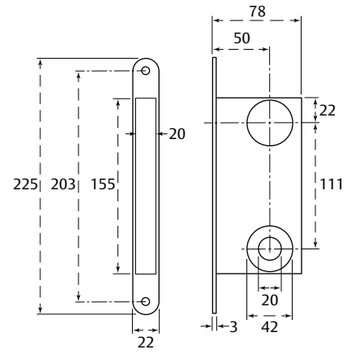

How to order

Order code	Description	Handing	Backset	Finish
803358165057	500/4 Escape double nightlatch	Left-in	50mm	BZ
804359165057	500/4 Escape double nightlatch	Left-out	50mm	BZ
804359163057	500/4 Escape double nightlatch	Right-in	50mm	BZ
803358163057	500/4 Escape double nightlatch	Right-out	50mm	BZ

When specifying these locks, both the door handing and whether the door opens inwards, or outwards must be stated
Please note that the exact type of spindle to specify varies depending on the lever handle range to be used
Special split spindles must be used where lever handles are fitted to split follower locks

ASSA ABLOY
Opening Solutions

566 Scandinavian rollerbolt lock

Modular Scandinavian mortice rollerbolt lock.

Features and benefits

- Roller bolt suitable for single swing and double swing doors
- Ideal for push/pull doors on applications such as shops, entrances, inner doors and toilet cubicles
- Roller bolt may be retracted by lever handle, or simply by pushing/pulling the door and is adjustable from 0mm to 8mm using the screw on the faceplate
- Cylinder operated deadbolt secures the door beyond the push/pull easy use roller bolt
- Note that the key / thumb turn does not retract the roller latch
- Accessory sets available to create bathroom locks

Classification code (Non-CE)

3	X	9	1	0	NPD	NPD	NPD	NPD	NPD	NPD
(1/3)	(A-X)	(1-9)	(0/1)	(0/1)	(0-G)	(1-7)	(ABU)	(0-H)	(0-4)	(0-H)

EN 12209:2003

Classification code (Non-CE)

3	X	9	B	0	F	3	0	-	-	-
(1/3)	(A-X)	(1-9)	(0/1)	(0/1)	(0-G)	(1-7)	(ABU)	(0-H)	(0-4)	(0-H)

EN 12209:2016

5 YEAR GUARANTEE

EPD®

Testing and certification

UKCA / CE marked	No
Certified in compliance with	BS 8300 (70mm backset only), EN 12209
Suitable for fire doors	No
Certifire approval	No
Guarantee	5 years

Specification

Inner forend	N/A
Faceplate	Radius
Lever furniture fixing points	N/A
Reversible latch / handing	N/A
Angle of lever operation	N/A
Furniture	Push plate / pull handle
Cylinder compatibility	Scandinavian oval - single, double or cylinder with thumb turn Scandinavian round
Backset	50, 70mm
Follower	8mm
Dimensions (D x H x W)	74/94 x 150 x 18.5mm
Centre distance	111mm
Deadbolt throw	21mm
Faceplate size	22mm
Latch and deadbolt finish	Rollerbolt – Brass Deadbolt – Hardened steel
Case material finish	Zinc plated steel
Faceplate and strike plate finish	BZ
Splinter guard	No
Supplied with	Lockcase with faceplate
Accessories	See lockcases accessories section for items such as split follower and additional strike plates See door furniture section for items such as the 265 accessory set

Dimensions

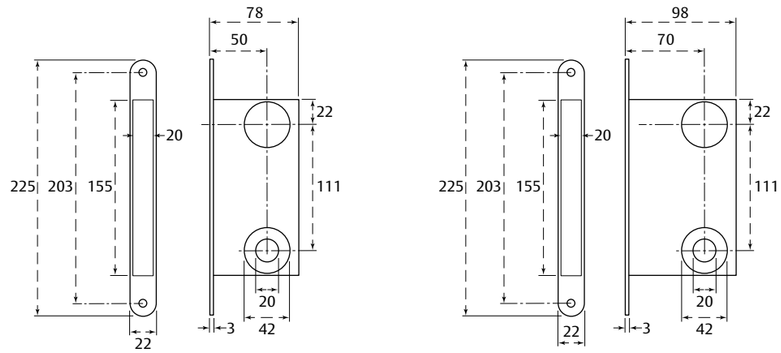

How to order

Order code	Description	Backset	Finish
469121167057	566 Rollerbolt lock	50mm	BZ
356296167057	566 Rollerbolt lock	70mm	BZ

ASSA ABLOY
Opening Solutions

1520 Scandinavian escape sashlock

Modular Scandinavian mortice escape sashlock with auto-deadlocking latch.

Features and benefits

- Locks for exit doors offering a very high degree of security from the outside, but allowing unrestricted exit
- Suitable for doors to apartments, hotel bedrooms and commercial premises
- Split follower lock incorporates different and separate functions on either side of the door
- Latchbolt deadlocks automatically when door is closed; cylinder driven deadlock provides additional security from outside but can be retracted by handle from inside
- Supplied with special box striking plate to accommodate the 25mm deadbolt throw

Classification code (CE)

3	X	9	1	0	NPD	NPD	NPD	NPD	NPD	NPD
(1/3)	(A-X)	(1-9)	(0/1)	(0/1)	(0-G)	(1-7)	(ABU)	(0-H)	(0-4)	(0-H)

EN 12209:2003

Classification code (Non-CE)

3	X	9	B	0	F	3	0	-	-	-
(1/3)	(A-X)	(1-9)	(0/1)	(0/1)	(0-G)	(1-7)	(ABU)	(0-H)	(0-4)	(0-H)

EN 12209:2016

Testing and certification

UKCA / CE marked	Yes
Certified in compliance with	BS 8300 (70mm backset only), EN 12209
Suitable for fire doors	Timber FD30/FD60, metal FD120
Certifire approval	No
Guarantee	5 years

Specification

Inner forend	N/A
Faceplate	Radius
Lever furniture fixing points	30mm NE/SW bolt through fixing points
Reversible latch / handing	No
Angle of lever operation	N/A
Furniture	For use with sprung and unsprung door furniture
Cylinder compatibility	Scandinavian oval - single, double or cylinder with thumb turn Scandinavian round
Backset	50, 70mm
Follower	8mm
Dimensions (D x H x W)	74/94 x 150 x 18.5mm
Centre distance	111mm
Deadbolt throw	25mm (with a 90° turn)
Faceplate size	22mm
Latch and deadbolt finish	Latchbolt – Bright zinc Deadbolt – Hardened steel, bright zinc
Case material finish	Zinc plated steel
Faceplate and strike plate finish	BZ
Splinter guard	No
Supplied with	Lockcase with faceplate, 2862-2 strike plate and fixings
Accessories	See lockcases accessories section for items such as intumescent kit for timber, split follower and additional strike plates See door furniture section for items such as lever range (Scanflex/Classic/ Distinction/ Ruko-line ranges)

Dimensions

Please see previous product page for dimension drawing.

How to order

Order code	Description	Handing	Backset	Finish
804747165057	1520 Escape sashlock	Left-in	50mm	BZ
804748165057	1520 Escape sashlock	Left-out	50mm	BZ
804748163057	1520 Escape sashlock	Right-in	50mm	BZ
804747163057	1520 Escape sashlock	Right-out	50mm	BZ
804749165057	1520 Escape sashlock	Left-in	70mm	BZ
804750165057	1520 Escape sashlock	Left-out	70mm	BZ
804750163057	1520 Escape sashlock	Right-in	70mm	BZ
804749163057	1520 Escape sashlock	Right-out	70mm	BZ
804750435057	1520 Escape sashlock, monitored	Left-out	70mm	BZ

ASSA ABLOY
Opening Solutions

2587 Scandinavian hookbolt lock

Modular Scandinavian mortice hookbolt lock (bathroom lock with accessory set).

Features and benefits

- Locks which are particularly suitable for high security applications, as the hookbolt gives maximum resistance to attack
- Also suitable for sliding doors, double doors and gates
- Cylinder operates hook bolt
- Cylinder and accessories bolt through lockcase for added strength
- Can be used with 265 accessory set to make a bathroom lock

Classification code (CE)

3	X	9	1	0	NPD	NPD	NPD	NPD	NPD	NPD
(1/3)	(A-X)	(1-9)	(0/1)	(0/1)	(0-G)	(1-7)	(ABU)	(0-H)	(0-4)	(0-H)

EN 12209:2003

Classification code (Non-CE)

3	X	9	B	0	F	3	0	-	-	-
(1/3)	(A-X)	(1-9)	(0/1)	(0/1)	(0-G)	(1-7)	(ABU)	(0-H)	(0-4)	(0-H)

EN 12209:2016

Testing and certification

UKCA / CE marked	Yes
Certified in compliance with	EN 12209, EN 1634-1
Suitable for fire doors	Timber FD30/FD60, metal FD120
Certifire approval	No
Guarantee	5 years

Specification

Inner forend	N/A
Faceplate	Radius
Lever furniture fixing points	N/A
Reversible latch / handing	N/A
Angle of lever operation	N/A
Furniture	Push plate / pull handle
Cylinder compatibility	Scandinavian oval - single, double or cylinder with thumb turn Scandinavian round
Backset	50mm
Follower	8mm
Dimensions (D x H x W)	74 x 150 x 18.5mm
Centre distance	N/A
Deadbolt throw	22mm (with a 90° turn)
Faceplate size	22mm
Latch and deadbolt finish	Hookbolt – Bright zinc
Case material finish	Zinc plated steel
Faceplate and strike plate finish	BZ
Splinter guard	No
Supplied with	Lockcase with faceplate. 2864-1 strike plate and fixings
Accessories	See lockcases accessories section for items such as intumescent kit for timber and additional strike plates See door furniture section for items such as lever range (Scanflex/Classic/ Distinction/ Ruko-line ranges) and 265 accessory set

Dimensions

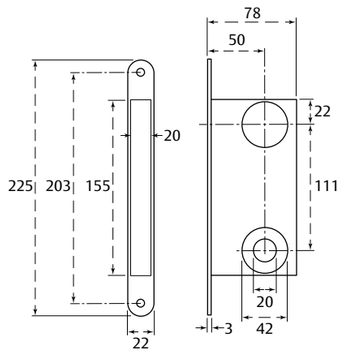

How to order

Order code	Description	Backset	Finish
353452167057	2587 Hookbolt lock	50mm	BZ

ASSA ABLOY
Opening Solutions

9787 Scandinavian high security hookbolt lock

Modular Scandinavian mortice high security hookbolt lock.

Features and benefits

- Particularly suitable for high security applications, as hookbolt gives maximum resistance to attack
- Suitable for sliding doors, double doors and gates
- Cylinder and accessories bolt through lockcase for added strength

Classification code (CE)

3	NPD	9	1	0	NPD	NPD	NPD	NPD	NPD	NPD
(1/3)	(A-X)	(1-9)	(0/1)	(0/1)	(0-G)	(1-7)	(ABU)	(0-H)	(0-4)	(0-H)

EN 12209:2003

Classification code (Non-CE)

3	NPD	9	B	0	F	5	0	-	-	-
(1/3)	(A-X)	(1-9)	(0/1)	(0/1)	(0-G)	(1-7)	(ABU)	(0-H)	(0-4)	(0-H)

EN 12209:2016

Testing and certification

UKCA / CE marked	Yes
Certified in compliance with	EN 12209, EN 1634-1
Suitable for fire doors	Timber FD30/FD60, metal FD120
Certifire approval	No
Guarantee	5 years

Specification

Inner forend	N/A
Faceplate	Radius
Lever furniture fixing points	N/A
Reversible latch / handing	N/A
Angle of lever operation	N/A
Furniture	Push plate / pull handle
Cylinder compatibility	Scandinavian oval - single, double or cylinder with thumb turn Scandinavian round
Backset	50mm
Follower	8mm
Dimensions (D x H x W)	74 x 150 x 18.5mm
Centre distance	N/A
Deadbolt throw	22mm (with a 360° turn)
Faceplate size	22mm
Latch and deadbolt finish	Hookbolt – Bright zinc
Case material finish	Zinc plated steel
Faceplate and strike plate finish	BZ
Splinter guard	No
Supplied with	Lockcase with faceplate, 1887-1 strike plate and fixings
Accessories	See lockcases accessories section for items such as intumescent kit for timber and additional strike plates See door furniture section for items such as lever range (Scanflex/Classic/ Distinction/ Ruko-line ranges)

Dimensions

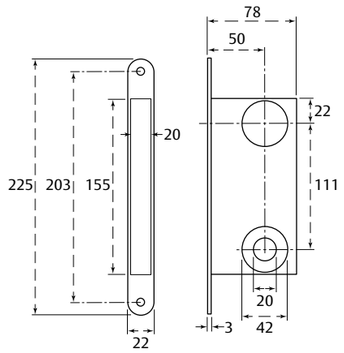

How to order

Order code	Description	Backset	Finish
353341167057	2587 High security hookbolt lock	50mm	BZ
353341357057	2587 High security hookbolt lock, monitored	50mm	BZ

Narrow profile lockcases

Narrow profile lockcases allow you to fit a lock into a door with a narrow internal upright rail or lock block. This creates more space for larger vision panels or decorative elements without compromising on safety or security.

The small backset of the product means it is suitable for use on aluminium doors, as well as timber and steel doors.

The range features maximum security deadlocks that meet security grade 6 against EN 12209 standard, and deadlocks that can withstand a 10kN side load. Plus, high security hookbolt locks which are ideal for use on shop fronts and other glazed doors.

Features and benefits

- Narrow backsets between 22.2mm – 40mm
- Large range of accessories
- Available in either Euro, Scandinavian oval or rim profile
- Some variants can be used with electric strikes
- Cylinder master keying for access control allowing or restricting access
- Simple replacement of cylinders if the keys are lost or stolen

ASSA ABLOY
Opening Solutions

4710 round cylinder deadlatch

Mortice round cylinder deadlatch.

Features and benefits

- Available for aluminium or steel doors
- Auxiliary bolt feature deadlocks latch when the door is closed against the strike
- Can be used in conjunction with 7400 series electric strikes to provide remote access control
- Meets EN 179:2008 when used in emergency exit applications with a 4591 paddle handle and the E8461 ramped jaw strike plates
- Independently tested to 1 million cycles

Classification code (Push variants)

3	7	6	0	1	3	4	2	B	A
(3)	(6-7)	(5-7)	(0/A/B)	(1)	(3-4)	(2-5)	(1-2)	(A/B)	(A-D)

EN 179 :2008

Classification code (Pull variants)

3	7	6	0	1	3	4	2	B	D
(3)	(6-7)	(5-7)	(0/A/B)	(1)	(3-4)	(2-5)	(1-2)	(A/B)	(A-D)

EN 179 :2008

Testing and certification

UKCA / CE marked	Yes
Certified in compliance with	EN 179 (when used with 4591 paddle handle)
Suitable for fire doors	No
Certifire approval	No
Guarantee	3 years

Specification

Inner forend	Square
Faceplate	Square
Lever furniture fixing points	Face fixed
Reversible latch / handing	Yes
Furniture	4568 handles or 4565 thumb turn lever or 4591 paddle handle
Cylinder compatibility	Round cylinder
Backset	22.2, 24.6, 28.6, 38.1mm
Dimensions (D x H x W)	38.3/40.6/44.7/54.4 x 148 x 25mm
Deadbolt throw	Deadlatch – 12.7mm
Faceplate size	25mm
Latch and deadbolt finish	Deadlatch – ZA-27 Zinc, chrome plated. Hardened steel internal pins, plus anti-pick baffle
Case material finish	Steel with corrosion-resistant plating
Faceplate and strike plate finish	SA (628) – ordered separately
Splinter guard	No
Supplied with	Lockcase with faceplate and fixings
Accessories	See lockcase accessories section for items such as additional faceplate and strike plates. Other complementing products: 4591 paddle handle to suit EN 179 (panic and emergency hardware section), 7400 electric strike (electromechanical section)

Dimensions

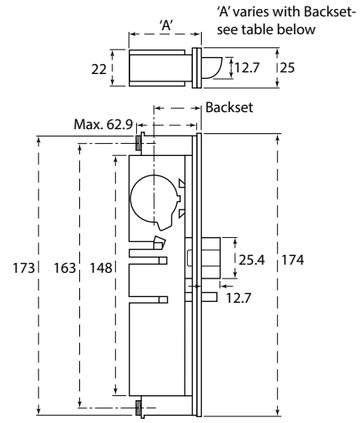

Backset	Dimension 'A'
22.2mm	38.3mm
24.6mm	40.6mm
28.6mm	44.7mm
38.1mm	54.4mm

How to order

Order code	Description	Handing	Backset	Finish
4710-100-5	4710 Round cylinder deadlatch, body only	Left	22.2mm	SA
4710-200-5	4710 Round cylinder deadlatch, body only	Left	24.6mm	SA
4710-200-6	4710 Round cylinder deadlatch, body only	Right	24.6mm	SA
4710-300-5	4710 Round cylinder deadlatch, body only	Left	28.6mm	SA
4710-300-6	4710 Round cylinder deadlatch, body only	Right	28.6mm	SA
4710-400-5	4710 Round cylinder deadlatch, body only	Left	38.1mm	SA
4710-400-6	4710 Round cylinder deadlatch, body only	Right	38.1mm	SA

ASSA ABLOY
Opening Solutions

4750 Euro profile deadlatch

Mortice Euro profile cylinder deadlatch.

Features and benefits

- Available for aluminium or steel doors
- Can be used in conjunction with the 7400 series electric strike to provide remote access control
- Auxiliary bolt feature deadlocks latch when door is closed against the strike plate
- Meets EN 179:2008 when used in emergency exit applications with a 4591 paddle handle and the E8461 ramped jaw strike plate
- Holdback function via reverse turn of key
- Independently tested to 1 million cycles

Classification code (Push variants)

3	7	6	0	1	3	4	2	B	A
(3)	(6-7)	(5-7)	(0/A/B)	(1)	(3-4)	(2-5)	(1-2)	(A/B)	(A-D)

EN 179 :2008

Classification code (Pull variants)

3	7	6	0	1	3	4	2	B	D
(3)	(6-7)	(5-7)	(0/A/B)	(1)	(3-4)	(2-5)	(1-2)	(A/B)	(A-D)

EN 179 :2008

UK CA CE 3 YEAR GUARANTEE

Testing and certification

UKCA / CE marked	Yes
Certified in compliance with	EN 179 (when used with 4596 paddle handle)
Suitable for fire doors	No
Certifire approval	No
Guarantee	3 years

Specification

Inner forend	Square
Faceplate	Square
Lever furniture fixing points	Face fixed
Reversible latch / handing	Yes
Furniture	4596 paddle handle
Cylinder compatibility	Euro profile - single, double or cylinder with thumb turn
Backset	24, 28 and 37mm
Dimensions (D x H x W)	40.6/44.7/54.4 x 148 x 25mm
Deadbolt throw	Deadlatch – 12.7mm
Faceplate size	25mm
Latch and deadbolt finish	Deadlatch – ZA-27 Zinc, chrome plated. Hardened steel internal pins, plus anti-pick baffle
Case material finish	Steel with corrosion-resistant plating
Faceplate and strike plate finish	SA (628) – ordered separately
Splinter guard	No
Supplied with	Lockcase with faceplate and fixings
Accessories	See lockcase accessories section for items such as extra faceplate and strike plates See panic and emergency hardware section for 4596 paddle handle set to suit EN 179:2008 See electomechanical section for 7400 electric strike and mounting clips

Dimensions

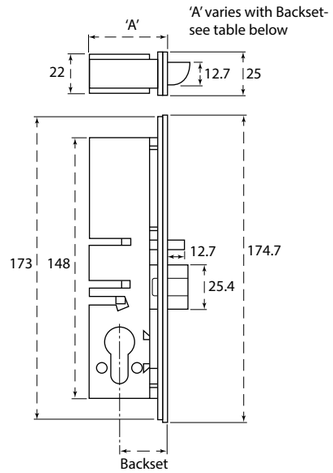

Backset	Dimension 'A'
24mm	40.6mm
28mm	44.7mm
37mm	54.4mm

How to order

Order code	Description	Handing	Backset	Finish
4750-200-5	4750 Euro profile cylinder deadlatch, body only	Left	24mm	SA
4750-200-6	4750 Euro profile cylinder deadlatch, body only	Right	24mm	SA
4750-300-5	4750 Euro profile cylinder deadlatch, body only	Left	28mm	SA
4750-300-6	4750 Euro profile cylinder deadlatch, body only	Right	28mm	SA
4750-400-5	4750 Euro profile cylinder deadlatch, body only	Left	37mm	SA
4750-400-6	4750 Euro profile cylinder deadlatch, body only	Right	37mm	SA

ASSA ABLOY
Opening Solutions

2200 Euro profile deadlock

Mortice Euro profile maximum security deadlock.

Features and benefits

- Available for aluminium or steel doors
- 2/3 point locking available when used with 4022-18 kit
- Alumina ceramic core in bolt to prevent hacksaw attack
- Riv-nut fixing version available
- Monitoring available on selected variants
- 2200 lock body designed to cater for 17mm Euro profile as standard

3 YEAR GUARANTEE

Testing and certification

UKCA / CE marked	No
Certified in compliance with	No
Suitable for fire doors	No
Certifire approval	No
Guarantee	3 years

Specification

Inner forend	Square
Faceplate	Square
Furniture	Push plate / pull handle
Cylinder compatibility	Euro profile - single, double or cylinder with thumb turn
Backset	25, 30, 40mm
Dimensions (D x H x W)	41/46/56 x 159 x 25mm
Deadbolt throw	Barbolt – 32mm Hookbolt – 20mm (projection when swung into place)
Faceplate size	25mm
Latch and deadbolt finish	Barbolt – laminated steel with aluma-ceramic (anti saw core) Hookbolt – laminated steel with aluma-ceramic (anti saw core)
Case material finish	Steel with corrosion-resistant plating
Faceplate and strike plate finish	SA (628) – ordered separately
Splinter guard	No
Supplied with	Lockcase with faceplate and fixings
Accessories	See lockcases accessories section for items such as extra faceplates and armoured parts, 4022-18 flush bolt and mounting clips

Dimensions

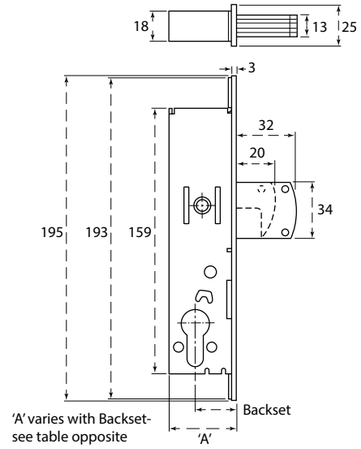

Backset	Dimension 'A'
25mm	41mm
30mm	46mm
40mm	56mm

How to order

Order code	Description	Bolt type	Backset	Finish
2200-110	2200 Maximum security deadlock	Barbolt	25mm	SA
2200-150	2200 Maximum security deadlock	Hookbolt	25mm	SA
2200-150-02	2200 Maximum security deadlock, monitored	Hookbolt	25mm	SA
2200-153	2200 Maximum security deadlock , rivnut	Hookbolt	25mm	SA
2200-210	2200 Maximum security deadlock	Barbolt	30mm	SA
2200-250	2200 Maximum security deadlock	Hookbolt	30mm	SA
2200-250-02	2200 Maximum security deadlock, monitored	Hookbolt	30mm	SA
2200-350	2200 Maximum security deadlock	Hookbolt	40mm	SA

ASSA ABLOY
Opening Solutions

Sentinel 6 Euro profile deadlock

Mortice Euro profile extreme security deadlock.

Features and benefits

- Available for aluminium or steel doors
- Independently tested to meet security grade 6 against EN 12209
- Bolt withstands 10kN side load in unsupported application and 6kN end load
- Barbolt with anti-spread feature incorporating benefits of a hookbolt
- Enclosed mechanism prevents potential for tampering while under attack
- Will retrofit into existing preparation for 2200

3 YEAR GUARANTEE

Testing and certification

UKCA / CE marked	No
Certified in compliance with	No
Suitable for fire doors	No
Certifire approval	No
Guarantee	3 years

Specification

Inner forend	Square
Faceplate	Square
Lever furniture fixing points	N/A
Reversible latch / handing	N/A
Angle of lever operation	N/A
Furniture	Push plate / pull handle
Cylinder compatibility	Euro profile - single, double or cylinder with thumb turn
Backset	25, 30, 40mm
Follower	N/A
Dimensions (D x H x W)	42/47/57 x 159 x 25mm
Centre distance	N/A
Deadbolt throw	Hookbolt – 31mm
Faceplate size	25mm
Latch and deadbolt finish	Hookbolt – 6 ply laminated steel with aluma-ceramic insert (anti saw core)
Case material finish	Steel with corrosion-resistant plating
Faceplate and strike plate finish	SA (628) – ordered separately
Splinter guard	No
Supplied with	Lockcase with faceplate, mounting tabs and fixings
Accessories	See lockcases accessories section for items such as strike plates, faceplates and escutcheons

Dimensions

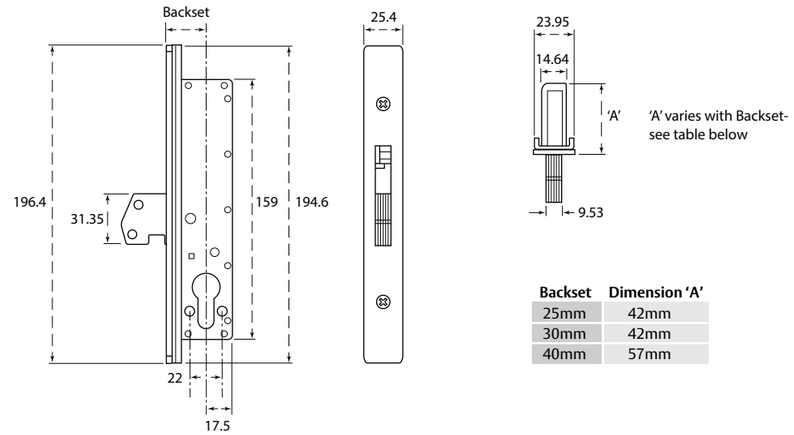

Backset	Dimension 'A'
25mm	42mm
30mm	42mm
40mm	57mm

How to order

Order code	Description	Backset	Finish
2600-200	Sentinel 6 extreme security deadlock	25mm	SA
2600-300	Sentinel 6 extreme security deadlock	30mm	SA
2600-301	Sentinel 6 extreme security deadlock (20 pack)	30mm	SA
2600-400	Sentinel 6 extreme security deadlock	40mm	SA
2600-401	Sentinel 6 extreme security deadlock (20 pack)	40mm	SA

ASSA ABLOY
Opening Solutions

13787 narrow profile Scandinavian oval cylinder hookbolt lock

Mortice Scandinavian profile hookbolt lock.

Features and benefits

- Available for timber and metal doors
- Special high security hookbolt lock for narrow profile doors
- Recommended for shop doors, as well as other glazed doors where a higher degree of security is required
- Lock is key operated on either side of door with a removable faceplate and a swing type hookbolt which is locked by a single 360° turn of key
- Key can be removed in locked or unlocked position

Classification code (CE)

3	NPD	9	1	0	NPD	NPD	NPD	NPD	NPD	NPD
(1/3)	(A-X)	(1-9)	(0/1)	(0/1)	(0-G)	(1-7)	(ABU)	(0-H)	(0-4)	(0-H)

EN 12209:2003

Classification code (Non-CE)

3	NPD	9	B	0	F	3	0	-	-	-
(1/3)	(A-X)	(1-9)	(0/1)	(0/1)	(0-G)	(1-7)	(ABU)	(0-H)	(0-4)	(0-H)

EN 12209:2016

Testing and certification

UKCA / CE marked	Yes
Certified in compliance with	EN 12209, EN 1634-1
Suitable for fire doors	Metal FD120
Certifire approval	No
Guarantee	5 years

Specification

Inner forend	N/A
Faceplate	Radius
Lever furniture fixing points	N/A
Reversible latch / handing	N/A
Angle of lever operation	N/A
Furniture	Push plate / pull handle
Cylinder compatibility	Scandinavian oval - single, double or cylinder with thumb turn Scandinavian round
Backset	28mm
Follower	N/A
Dimensions (D x H x W)	51 x 115 x 18.5mm
Centre distance	N/A
Hookbolt throw	22mm
Faceplate size	25mm
Latch and deadbolt finish	Hookbolt – bright zinc
Case material finish	Zinc plated steel
Faceplate and strike plate finish	BZ
Splinter guard	N/A
Supplied with	Lockcase with faceplate, 1887-1 strike plate and fixings
Accessories	See lockcases accessories section for items such as additional strike plates

Dimensions

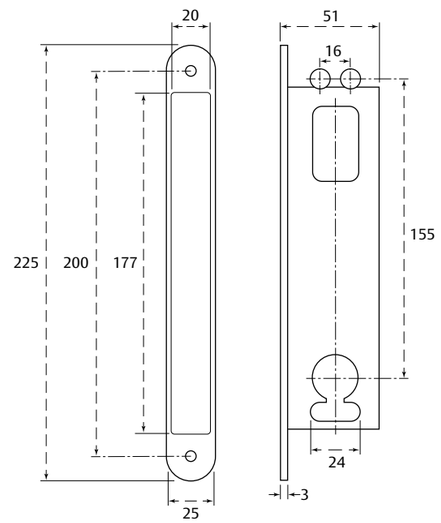

How to order

Order code	Description	Backset	Finish
468573807057	13787 Narrow profile hookbolt	28mm	BZ

Please note: When ordering please specify door thickness

CE latches and bolts

Latches and bolts are both mechanical fasteners mainly used on internal doors where a lock is not required. Latches are compatible with most levers and knobs, bolts are compatible with a bathroom turn and release.

Smaller than other variations of locks, a tubular latch can be fitted with much less effort than a traditional lock and requires minimal cutting and drilling of the door. They are available in a variety of sizes and finishes to ensure you can replace like for like and match with current decor.

Our range features quick-fitting round profile push-fit latches and bolts, as well as a heavy-duty tubular latches ideal for high traffic environments.

Range benefits

- Easily reversible by rotating the case
- Available in various finishes
- HD26 available in 45mm or 57mm backsets
- SmartLatch and SmartBolt available in a 57mm backset
- Round / radius faceplates allow for easy morticing on site and factory preparation
- Rectangular face plates allow for easy morticing on site

ASSA ABLOY
Opening Solutions

CE SmartLatch

A round profile push-fit latch for quick installation.

Features and benefits

- Unique round faceplate which saves time when fitting, as the installer simply needs to drill a round hole
- Allows for a more accurate, clean and precise method of installation
- Suitable for use in residential environments, including properties of three or more storeys
- Meets the requirements of Approved Document B
- A one product solution for an entire property or development
- Supplied with both round and rectangular strike plates (round for fire rated)

Classification code

1	L	4	1	0	C	NPD	B	0	NPD	0
(1/3)	(A-X)	(1-9)	(0/1)	(0/1)	(0-G)	(1-7)	(ABU)	(0-H)	(0-4)	(0-H)

EN 12209:2003

UK CA CE 5 YEAR GUARANTEE certifire

Testing and certification

UKCA / CE marked	Yes
Certified in compliance with	EN 12209, EN 1634-1 (round strike plate only)
Suitable for fire doors	Timber FD30/FD60 (round strike plate only)
Certifire approval	Yes
Guarantee	5 years

Specification

Inner forend	N/A
Faceplate	Round
Lever furniture fixing points	38mm centres both through fixing points
Reversible latch / handing	Yes
Furniture	Unsprung lever handles
Case size (Length)	71.4mm
Case size (Height)	20mm
Backset	57mm
Follower	8mm
Faceplate width	25.4mm diameter
Latch throw	11mm
Deadbolt throw	N/A
Strike plate size	Rectangular - 28mm, Round - 32mm diameter
Latch finish	Matches faceplate and strike plate
Deadbolt throw	N/A
Case material finish	Zinc alloy
Faceplate and strike plate finish	PCP, SNP, BNKL or ANB
Splinter guard	Rectangular plastic or round metal
Supplied with	Latch, rectangular strike plate with plastic splinter guard, round strike plate with metal round splinter guard and fixings
Accessories	See lockcases accessories section for items such as intumescent kit

Dimensions

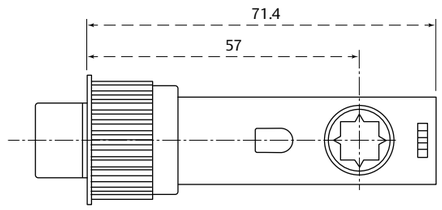

How to order

Order code	Description	Backset	Finish
DH002280-F	SmartLatch	57mm	SNP
DH002285-F	SmartLatch	57mm	PCP
DH002290-F	SmartLatch	57mm	BNKL
DH002295-F	SmartLatch	57mm	ANB

ASSA ABLOY
Opening Solutions

CE SmartBolt

A round profile push-fit bolt for quick installation.

Features and benefits

- Unique round faceplate which saves time when fitting, as the installer simply needs to drill a round hole
- Allows for more accurate, clean and precise method of installation
- Suitable for cupboards and bathrooms in residential environments, including properties of three or more storeys
- Meets the requirements of Approved Document B
- A one product solution for an entire property or development
- Supplied with both round and rectangular strike plates (round for fire rated)

Classification code

NPD (1/3)	NPD (A-X)	NPD (1-9)	1 (0/1)	0 (0/1)	NPD (0-G)	NPD (1-7)	NPD (ABU)	NPD (0-H)	NPD (0-4)	NPD (0-H)

EN 12209:2003

UK CA CE 5 YEAR GUARANTEE certifire

Testing and certification

UKCA / CE marked	Yes
Certified in compliance with	EN 12209, EN 1634-1 (round strike plate only)
Suitable for fire doors	Timber FD30/FD60 (round strike plate only)
Certifire approval	Yes
Guarantee	5 years

Specification

Inner forend	N/A
Faceplate	Round
Lever furniture fixing points	N/A
Reversible latch / handing	Yes
Furniture	Push plate / pull handle or bathroom turn / indicator
Case size (Length)	77.1mm
Case size (Height)	20mm
Backset	57mm
Follower	5mm
Faceplate width	25.4mm diameter
Latch throw	N/A
Deadbolt throw	15.4mm
Strike plate size	Rectangular - 28mm, Round - 32mm diameter
Latch finish	N/A
Deadbolt throw	Matches faceplate and strike plate
Case material finish	Zinc alloy
Faceplate and strike plate finish	PCP, SNP, BLNK or ANB
Splinter guard	Rectangular plastic or round metal
Supplied with	Latch, rectangular strike plate with plastic splinter guard, round strike plate with metal round splinter guard and fixings
Accessories	See lockcases accessories section for items such as intumescent kit

Dimensions

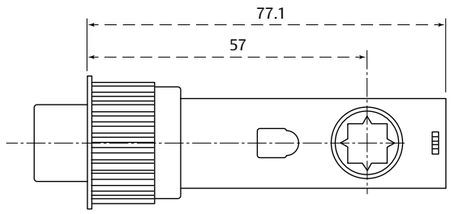

How to order

Order code	Description	Backset	Finish
DH002281-F	SmartBolt	57mm	SNP
DH002286-F	SmartBolt	57mm	PCP
DH002291-F	SmartBolt	57mm	BNKL
DH002296-F	SmartBolt	57mm	ANB

ASSA ABLOY
Opening Solutions

HD26 heavy duty tubular latch

Heavy duty tubular latch for high use environments.

Features and benefits

- Cycle tested for over 1 million cycles through the follower and slam tested on the latch
- Both 2.5" and 3" cases pierced to accept bolt through furniture
- Bolt through fixings allow for a more secure, longstanding fixing of door furniture
- Profiled bevelled latch for smooth and positive engagement during operation
- Supplied with two faceplates, offering either stainless steel or polished brass finish
- Double sprung allowing universal handing
- Available with radius or square faceplate
- Supplied with an adjustable formed strike plate complete with a splinter guard for a professional finish

Classification code

2	M	4	1	0	F	NPD	B	0	2	0
(1/3)	(A-X)	(1-9)	(0/1)	(0/1)	(0-G)	(1-7)	(ABU)	(0-H)	(0-4)	(0-H)

EN 12209:2003

Testing and certification

UKCA / CE marked	Yes
Certified in compliance with	EN 12209, EN 1634-1
Suitable for fire doors	Timber FD30/FD60
Certifire approval	No
Guarantee	10 years

Specification

Inner forend	Radius
Faceplate	Radius or square
Lever furniture fixing points	26-38mm centres both through fixing points
Reversible latch / handing	Yes
Furniture	Sprung and light unsprung lever furniture, can also be used with knob furniture
Case size (Length)	70, 82mm
Case size (Height)	25mm
Backset	45, 57mm
Follower	8mm
Latch throw	11mm
Deadbolt throw	N/A
Faceplate size	25mm
Latch finish	Zinc, brass appearance
Deadbolt throw	N/A
Case material finish	Steel
Faceplate and strike plate finish	SS, PB
Splinter guard	Black plastic
Supplied with	Latch, radius or square face plate, radius or square strike plate, plastic splinter guard and fixings
Accessories	See lockcases accessories section for items such as intumescent kit

Dimensions

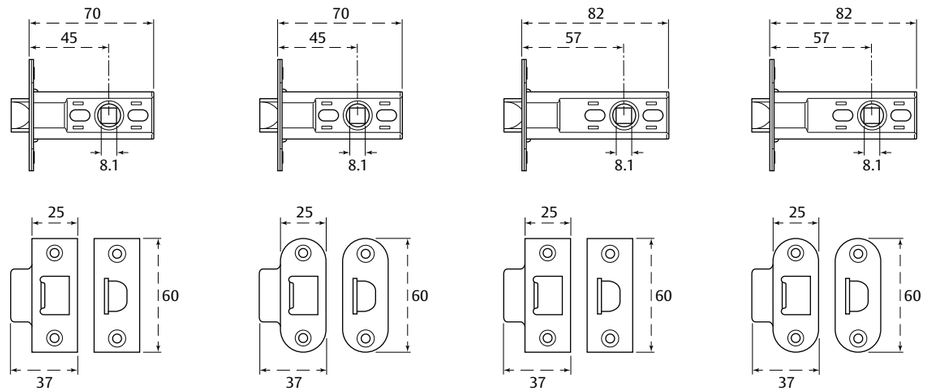

How to order

Order code	Description	Finish
JHD26R-PB/SS-2.5	HD26 tubular latch, 2.5" case with radius faceplate	PB/SS
JHD26R-PB/SS-3.0	HD26 tubular latch, 3" case with radius faceplate	PB/SS
JHD26S-PB/SS-2.5	HD26 tubular latch, 2.5" case with square faceplate	PB/SS
JHD26S-PB/SS-3.0	HD26 tubular latch, 3" case with square faceplate	PB/SS

Lockcase accessories

Types of accessories you will find included:

- Rebate kits
- Strike plates
- Faceplates
- Mounting clips
- Intumescent kits

ASSA ABLOY
Opening Solutions

Lockcases accessories

Products: Rebate kits for double doors (UK lockcases)

Product code	Description	Compatible with	Finish	Image
J2100REB-0.5-PL	StrongBOLT Deadlock rebate kit, 0.5”	StrongBOLT deadlock (JL21EUS or JL21OVS)	PL	
J2100REB-0.5-SC	StrongBOLT Deadlock rebate kit, 0.5”	StrongBOLT deadlock (JL21EUS or JL21OVS)	SC	
J2100REB-1.0-PL	StrongBOLT Deadlock rebate kit, 1.0”	StrongBOLT deadlock (JL21EUS or JL21OVS)	PL	
J2100REB-1.0-SC	StrongBOLT Deadlock rebate kit, 1.0”	StrongBOLT deadlock (JL21EUS or JL21OVS)	SC	
J2200REB-0.5-PL	StrongBOLT Sashlock rebate kit, 0.5”	StrongBOLT sashlock (JL22EUS/JL22OVS), bathroom (J22WCS)	PL	
J2200REB-0.5-SC	StrongBOLT Sashlock rebate kit, 0.5”	StrongBOLT sashlock (JL22EUS/JL22OVS), bathroom (J22WCS)	SC	
J2200REB-1.0.PL	StrongBOLT Sashlock rebate kit, 1.0”	StrongBOLT sashlock (JL22EUS/JL22OVS), bathroom (J22WCS)	PL	
J2200REB-1.0-SC	StrongBOLT Sashlock rebate kit, 1.0”	StrongBOLT sashlock (JL22EUS/JL22OVS), bathroom (J22WCS)	SC	

Products: Intumescent kits for fire doors (UK Lockcases, DIN Lockcases, Scandinavian Lockcases, CE Latches & Bolts)

Product code	Description	Compatible with	Finish	Image
J-STRONGBOLT-DL-IK	StrongBOLT Deadlock intumescent pack to suit FD30/FD60 timber doors	StrongBOLT deadlock (JL21EUS or JL21OVS)	Graphite	
J-STRONGBOLT-SL-IK	StrongBOLT Sashlock intumescent pack to suit FD30/FD60 timber doors	StrongBOLT sashlock (JL22EUS/JL22OVS), bathroom (J22WCS)	Graphite	
J0347255-IK	400 series intumescent kit to FD30/FD60/FD90/FD120 timber doors, 55mm backset	400 DIN range (J03472 – DL, LA, NL, SL)	Graphite	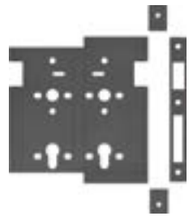
J0347260-IK	400 series intumescent kit to FD30/FD60/FD90/FD120 timber doors, 60mm backset	400 DIN range (J03472 – DL, LA, NL, SL)	Graphite	
JHD72-IK	HD72 intumescent kit to suit FD30/FD60 timber doors	HD72 DIN range (JHD72 - All)	Graphite	
ASSA-MODULAR-IK	Modular intumescent kit to suit FD30/FD60 timber doors	ASSA Modular – 565, 8765, 2000, 1498, 2588, 9788, 6585, 1560, 560, 562, 8561, 8560, 500/9, 500/4, 1520, 2587, 9787	Graphite	
DH3060-IK	SmartLatch intumescent kit to suit FD30/FD60 timber doors	CE Smartlatch and bolt (All)	Graphite	
J-HD26-IK	HD26 tubular latch intumescent kit to suit FD30/FD60 timber doors	HD26 (All)	Graphite	

ASSA ABLOY
Opening Solutions

Lockcases accessories

Products: Fixing packs for different finishes (HD72 DIN range)

Product code	Description	Compatible with	Finish	Image
JHD72DL-R-FIX-AB	HD72 Deadlock radius fixing pack, (Faceplate, strike plate and fixing screws)	JHD72DL	AB	
JHD72DL-R-FIX-CH			CH	
JHD72DL-R-FIX-PB			PB	
JHD72DL-R-FIX-SB			SB	
JHD72DL-R-FIX-SS			SS	
JHD72DL-S-FIX-AB	HD72 Deadlock square fixing pack, (Faceplate, strike plate and fixing screws)	JHD72DL	AB	
JHD72DL-S-FIX-CH			CH	
JHD72DL-S-FIX-PB			PB	
JHD72DL-S-FIX-SB			SB	
JHD72DL-S-FIX-SS			SS	
JHD72DNL-R-FIX-AB	HD72 Deadlocking nightlatch radius fixing pack, (Faceplate, strike plate and fixing screws)	JHD72DNL	AB	
JHD72DNL-R-FIX-CH			CH	
JHD72DNL-R-FIX-PB			PB	
JHD72DNL-R-FIX-SB			SB	
JHD72DNL-R-FIX-SS			SS	

Product code	Description	Compatible with	Finish	Image
JHD72DNL-S-FIX-AB	HD72 Deadlocking nightlatch square fixing pack, (Faceplate, strike plate and fixing screws)	JHD72DNL	AB	
JHD72DNL-S-FIX-CH			CH	
JHD72DNL-S-FIX-PB			PB	
JHD72DNL-S-FIX-SB			SB	
JHD72DNL-S-FIX-SS			SS	
JHD72LA-R-FIX-AB	HD72 Latch radius fixing pack,(Faceplate, strike plate and fixing screws)	JHD72LA	AB	
JHD72LA-R-FIX-CH			CH	
JHD72LA-R-FIX-PB			PB	
JHD72LA-R-FIX-SB			SB	
JHD72LA-R-FIX-SS			SS	
JHD72LA-S-FIX-AB	HD72 Latch square fixing pack, (Faceplate, strike plate and fixing screws)	JHD72LA	AB	
JHD72LA-S-FIX-CH			CH	
JHD72LA-S-FIX-PB			PB	
JHD72LA-S-FIX-SB			SB	
JHD72DL-S-FIX-SS			SS	

Product code	Description	Compatible with	Finish	Image
JHD72SL-R-FIX-AB	HD72 Sashlock / Escape Sashlock / Bathroom radius fixing pack, (Faceplate, strike plate and fixing screws)	JHD72SL, JHD72ESL and JHD72WC	AB	
JHD72SL-R-FIX-CH			CH	
JHD72SL-R-FIX-PB			PB	
JHD72SL-R-FIX-SB			SB	
JHD72SL-R-FIX-SS			SS	
JHD72SL-S-FIX-AB	HD72 Sashlock / Escape Sashlock / Bathroom square fixing pack, (Faceplate, strike plate and fixing screws)	JHD72SL, JHD72ESL and JHD72WC	AB	
JHD72SL-S-FIX-CH			CH	
JHD72SL-S-FIX-PB			PB	
JHD72SL-S-FIX-SB			SB	
JHD72SL-S-FIX-SS			SS	

Additional strike plates

Products: Scandinavian lockcases including Narrow profile

Product code	Description	Compatible with	Finish	Image
807343167057	Strike plate 2864-1 (35mm wide)	2588, 9788, 565, 1498, 6585, 5584, 6580, 5565, 1560, 560, 562, 8561, 8560, 8562, 8564, 500/9, 500/4, 2587	BZ	
807343167013	Strike plate 2864-1 (35mm wide)	2588, 9788, 565, 1498, 6585, 5584, 6580, 5565, 1560, 560, 562, 8561, 8560, 8562, 8564, 500/9, 500/4, 2587	SC	
807344167057	Strike plate 2864-2 (32.5mm wide)	2588, 9788, 565, 1498, 6585, 5584, 6580, 5565, 1560, 560, 562, 8561, 8560, 8562, 8564, 500/9, 500/4, 2587	BZ	
807344167013	Strike plate 2864-2 (32.5mm wide)	2588, 9788, 565, 1498, 6585, 5584, 6580, 5565, 1560, 560, 562, 8561, 8560, 8562, 8564, 500/9, 500/4, 2587	SC	
451057107057	Strike plate 2862-2 (35mm wide)	1520	BZ	
451057107013	Strike plate 2862-2 (35mm wide)	1520	SC	
461126107057	Strike plate 2862-3 (32.5mm wide)	1520	BZ	
460661103057	Strike plate 2866-1, RH	566	BZ	
460661105057	Strike plate 2866-1, LH	566	BZ	

ASSA ABLOY
Opening Solutions

Product code	Description	Compatible with	Finish	Image
460660107057	Strike plate 2866-2, Dual	566	BZ	
35335510757	Security strike plate 1887-1 (40mm wide, 12.5mm lip)	2588, 9788, 565, 8565, 2000, 1498, 8561, 8560, 8562, 8564, 2587, 9787, 13787	BZ	
353356567057	Security strike plate 1887-2 (40mm wide, 15.5mm lip)	2588, 9788, 565, 8565, 2000, 1498, 8561, 8560, 8562, 8564, 2587, 9787, 13787	BZ	
353357167013	Security strike plate 1887-3 (43.5mm wide, 19mm lip)	2588, 9788, 565, 1498, 6585, 5584, 6580, 5565, 1560, 560, 562, 8561, 8560, 8562, 8564, 500/9, 500/4, 2587	SC	
353357167057	Security strike plate 1887-3 (43.5mm wide, 19mm lip)	2588, 9788, 565, 8565, 2000, 1498, 8561, 8560, 8562, 8564, 2587, 9787, 13787	BZ	
353358567057	Security strike plate 1887-4 (45mm wide, 20.5mm lip)	2588, 9788, 565, 8565, 2000, 1498, 8561, 8560, 8562, 8564, 2587, 9787, 13787	BZ	
353467167057	Security strike plate 1887-5 (29.5mm wide, 4.5mm lip, 29.5 angle)	2588, 9788, 565, 8565, 2000, 1498, 8561, 8560, 8562, 8564, 2587, 9787, 13787	BZ	
468897167057	Security strike plate 1887-9 (25mm wide, 5.5mm lip)	13787	BZ	
364511167057	Security strike plate 1889-11 (40mm wide, 12-18mm lip)	2588, 9788, 565, 8565, 2000, 1498, 8561, 8560, 8562, 8564, 2587, 9787, 13787	BZ	
364507167057	Security strike plate 1889-12 (45mm wide, 17-23mm lip)	2588, 9788, 565, 8565, 2000, 1498, 8561, 8560, 8562, 8564, 2587, 9787, 13787	BZ	

Product code	Description	Compatible with	Finish	Image
352100108057	Security strike plate 1824-1, BZ (32mm wide, 5.5mm lip, 8 angle)	1520	BZ	
352101108057	Security strike plate 1824-2 (32mm wide, 5.5mm lip, 25 angle)	1520	BZ	
352102108057	Security strike plate 1824-3 (32mm wide, 7.5mm lip, 27 angle)	1520	BZ	
808287	1893 Deadlocking bar used with 1887 security strike plate	6585, 5584, 6580, 5565, 1560, 560, 562, 500/9, 500/4	BP	

ASSA ABLOY
Opening Solutions

Extra faceplates and strikes

Products: 4710 and 4750 Narrow profile lockcases

Product code	Description	Compatible with	Finish	Image
24-4700-000-628	Flat faceplate	4710, 4750	SAA	
24-4700-100-628	Radius faceplate		SAA	
24-4700-400-628	Radius w/s faceplate		SAA	
E8461-01-630	Flat ramp jaw strike plate (Single door frame section)	4710	SS	
E8461-02-630	Radius ramp jaw strike plate (Double door radius section)	4710	SS	
E8461-17-630	Flat extended ramp jaw strike plate	4710	SS	
E8461-21-630	Radius extended ramp jaw strike plate	4710	SS	
4568-501-130	Lever handle c/w cam plug silver, LH to suit 44.45mm door	4710	SIL	
4568-601-130	Lever handle c/w cam plug silver, RH to suit 44.45mm door	4710	SIL	

Product code	Description	Compatible with	Finish	Image
4580-5	Cam plug, reversible, LH, to suit 46mm door -- Rigidly fixed to handle escutcheon by hardened steel pins	4710	Steel	
4580-6	Cam plug, reversible, LH, to suit 46mm door -- Rigidly fixed to handle escutcheon by hardened steel pins	4710	Steel	
4565-501-130	Thumb turn lever with cam plug, LH	4710	SAA	
4565-601-130	Thumb turn lever with cam plug, RH	4710	SAA	

ASSA ABLOY
Opening Solutions

Extra faceplates and accessories

Products: 2200 Narrow profile lockcases

Product code	Description	Compatible with	Finish	Image
24-2200-010-628	Flat faceplate to suit barbolt	2200	SAA	
24-2200-050-628	Flat faceplate to suit hookbolt	2200	SAA	
24-2200-053-628	Flat faceplate to suit hookbolt W/O detent	2200	SAA	
24-2200-110-628	Radius faceplate to suit barbolt	2200	SAA	
24-2200-150-628	Radius faceplate to suit hookbolt	2200	SAA	
24-2200-250-628	Radius faceplate to suit hookbolt, LH	2200	SAA	
24-2200-350-628	Bevel faceplate to suit hookbolt, RH	2200	SAA	
24-2200-450-628	Radius faceplate to suit w/s hookbolt	2200	SAA	
4051-012-628	Flat trim strike plate to suit barbolt	2200	SAA	

Product code	Description	Compatible with	Finish	Image
4051-032-628	Flat trim strike plate to suit hookbolt	2200	SAA	
4051-132-628	Radius trim strike plate to suit hookbolt	2200	SAA	
4052-010	Armour part to suit barbolt	2200	SAA	
4052-050	Armour part to suit hookbolt	2200	SAA	
4022-18	Flushbolt kit	2200	Steel	

ASSA ABLOY
Opening Solutions

Extra faceplates and strikes

Products: Sentinel 6 Narrow profile

Product code	Description	Compatible with	Finish	Image
2627-010	Armoured strike plate	Sentinel 6 (2600)	SAA	
2627-012-628	Flat armoured trim strike plate	Sentinel 6 (2600)	SAA	
2627-112-628	Radius armoured trim strike plate	Sentinel 6 (2600)	SAA	
AH-2627-90-SL	Euro escutcheon	Sentinel 6 (2600)	SAA	
AH-2627-95-SL	Security Euro escutcheon	Sentinel 6 (2600)	SAA	
24-2627-010-628	Flat faceplate	Sentinel 6 (2600)	SAA	
24-2627-110-628	Radius faceplate	Sentinel 6 (2600)	SAA	

Aluminium door mounting clips

Products: Narrow profile lockcases

Product code	Description	Compatible with	Finish	Image
4104-01-2PK	Radius mounting clip (Pair)	4710, 4750, 2200, Sentinel 6 (2600)	Steel	
4104-12-2PK	Flat mounting clip (Pair)	4710, 4750, 2200, Sentinel 6 (2600)	Steel	

Cylinders

Introduction	520
Legislation	532
Product selector	536
UNION keyPRIME™	539
UNION keyMASTER™	551
P600	567
Triton² 3900	589
Triton² 5900	611
Accessories	633

Cylinders

A cylinder lock is a mechanical code reader for a key, it utilises mechanical pin tumbler technology to create a vast number of combinations, also known as differs. The more combinations a cylinder has the higher the security rating.

Cylinder locks are an imperative part of any door specification and offer many benefits to the user:

Control of access

Provides a solution for controlling the movement and access of authorised personnel in and around a building or site.

Security of a building

Provides protection to EN 1303:2015 against known forms of attack on a door to gain entry through use of force or manipulation.

Privacy

In some circumstances, the privacy of a specific end user or client is deemed priority, features can be built into a cylinder system to support this need.

Safety

Allowing egress through a door and out of a building, or providing fire and smoke resistance on a fire door to save lives.

Key control

A hierarchy of access and security levels can be created within a keying system to ensure only authorised personnel can access the correct areas of a building with ease.

Compatibility with other security products

Our cylinders are designed specifically to work in conjunction with a range of applications such as padlocks, cam locks and lockcases to ensure the correct specification can be achieved to meet a user's needs.

Our ranges offer quality and reliability, built on proven mechanical design and combined with a huge variety of profiles, functions and master keying capability to suit all building requirements.

Key features

- Products developed with robust technology, security and safety in mind
- Secure patented protection for all our master keyed systems for peace of mind
- Comprehensive product portfolio for any requirement
- Products built on a heritage of proven mechanical design – built to last for years

Parts of a cylinder, key and padlock

Key

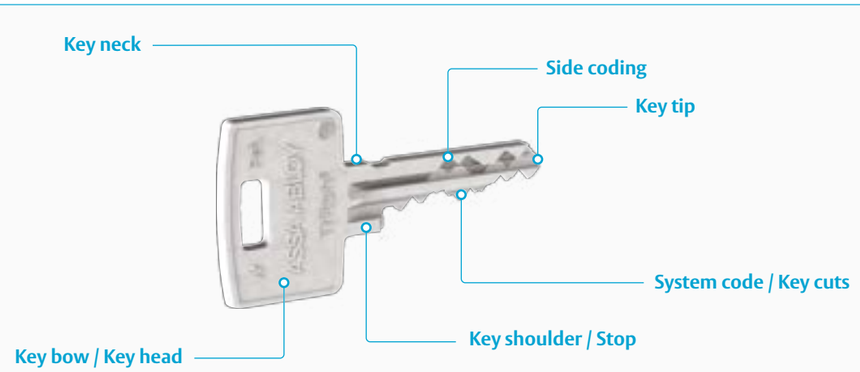

Cylinder

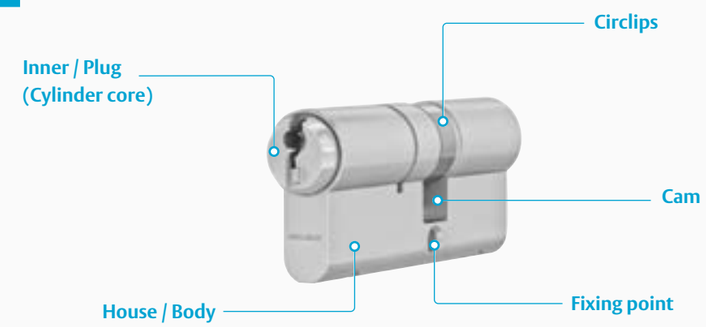

Padlock

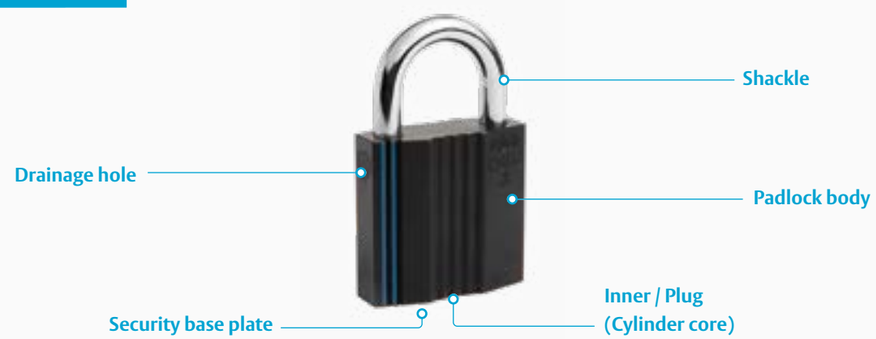

Types of cylinders

Euro

Euro shaped body profile, with plug and key way situated at the top of the cylinder. One of the most popular locks in use and generally identified as single, double and thumb turn variants. The cylinder is secured into a Euro profile lockcase by its central fixing point below the cam in the centre of the cylinder.

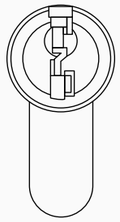

UK oval

An oval shaped body profile, with plug and key way situated at the top of the cylinder. Generally identified as single, double and thumb turn variants. The cylinder is secured into a UK style lockcase by its central fixing point below the cam in the centre of the cylinder.

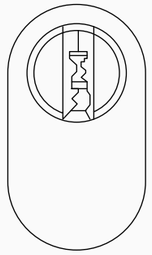

Scandinavian oval

Large oval shaped body profile, with the plug and key way situated at the bottom of the cylinder. The cam and fixings are on the back of the cylinder to work with Scandinavian style locks.

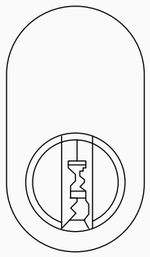

Round, rim and mortice

Large round shaped body profile, with the plug and key way situated at the bottom of the cylinder. Scandinavian styles have a smooth body and a flat cam fitted to the back and bolted to a Scandinavian lock. A mortice cylinder has a threaded body and flat cam so it can be screwed into an American lock. A rim cylinder has threaded holes and a long tail bar to secure and interact with a rim lock.

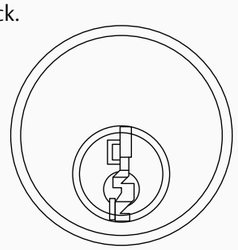

How to select the correct cylinder system

Keying requirement considerations

What keying requirement is needed for the building or application?

Keyed to differ cylinder (KTD)

All of our cylinders can be supplied as 'keyed to differ'. This means each cylinder can only be operated using the key it is supplied with.

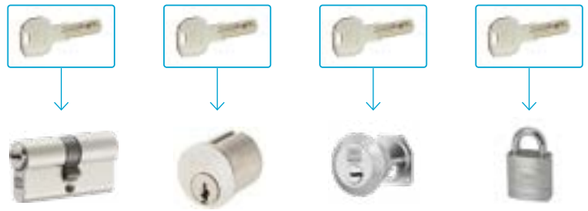

Keyed alike cylinder (KA)

Also known as a 'pass cylinder'. This cylinder is one of a pair, or group of cylinders, that are assembled with identical pin chamber components. This allows the same key to operate them all.

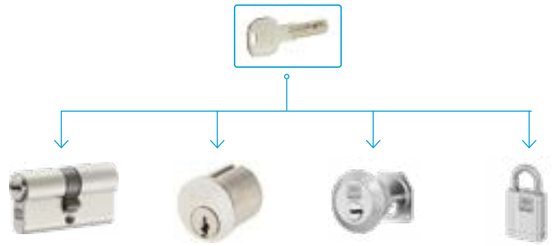

Common cylinder

Also known as a 'central locking' cylinder. It is generally used to enable a key-holder to gain entry through a main door alongside the desired internal doors with one key.

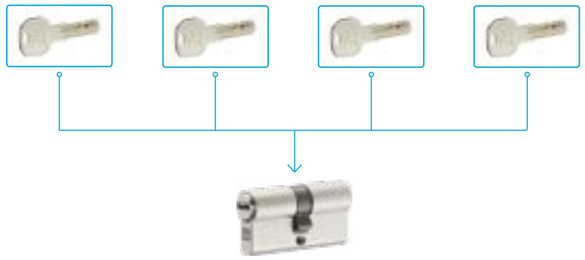

Master keyed cylinder (MK)

This cylinder is used when a level of control is required to restrict the movement and/or access of people within a building. The cylinders are generally used in commercial buildings to help to reduce the number of keys in circulation and improve security.

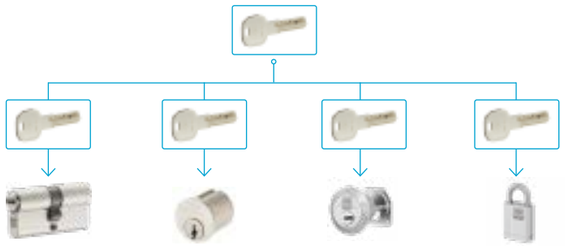

A cylinder can be configured to be operated by two or more different keys:

- **Servant key:** operates individual locks
- **Master key:** opens multiple doors in an area
- **Grand master key:** able to open all the locks in the suite

Master key system example

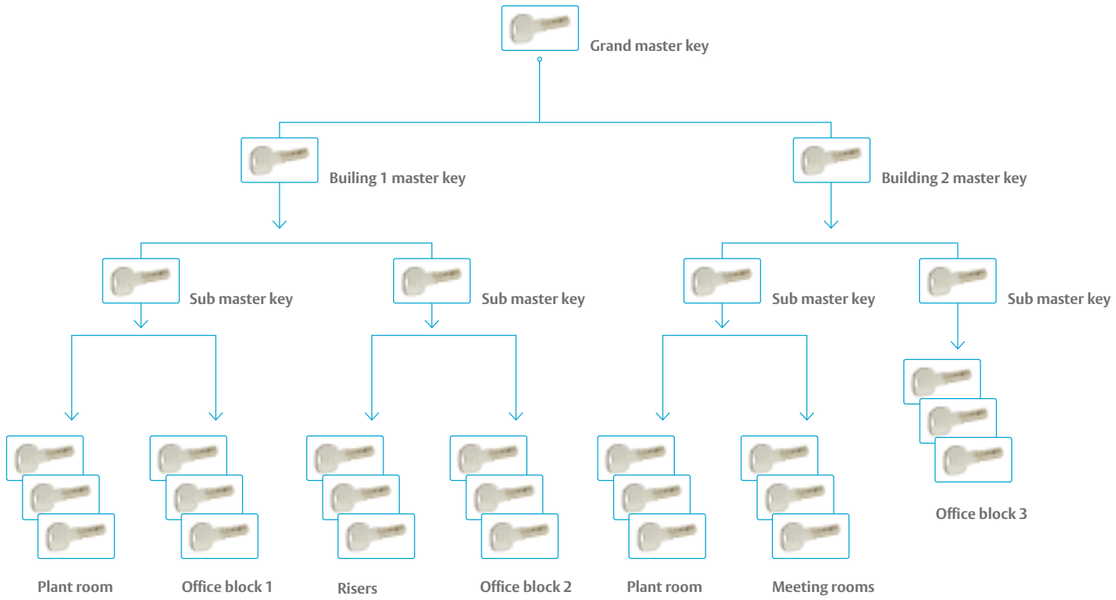

Here is an example of a master key system in a school environment:

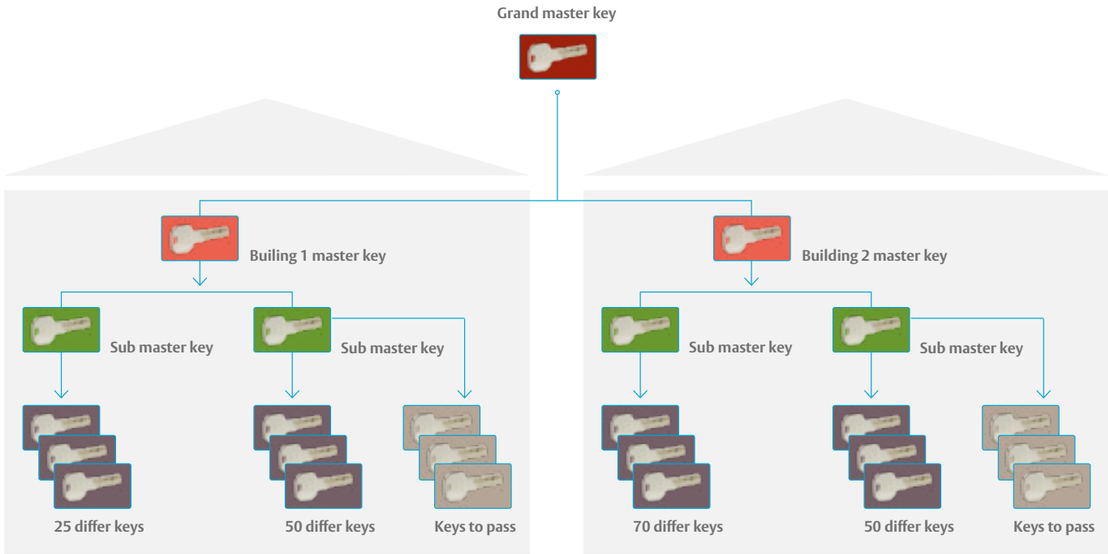

Head teacher

Head teacher: has access to the **grand master key**, and can access all doors within the building.

Deputy head

Deputy head: holds the **master key** for each building, their master keys will not open any of the doors on the opposite side of the building to ensure security is maintained.

Head of department

Head of department: **sub master keys** issued to each person who needs to access all rooms in that specified area, but will not be able to access other departments, this allows access but limits the security risk.

Teacher

Teacher: is issued with **servant keys**, only needs access to their own door/ classroom and not any other areas.

Cleaner / maintenance

Cleaners and maintenance: **keys to pass** for all cleaning maintenance cupboards around the school to reduce the number of keys carried.

Tips for master key system creation

1. Identify the doors, the nature of use behind the door and identify the sensitivity of the area
2. Identify doors that require differ cylinders, keyed alike cylinders and common cylinders
3. Determine the number of key levels by status and use throughout the entire system

It is important to consider the following when setting up a new master key system:

- Do not over design the system
- Less keys mean more security
- Keep the system design simple to reduce risk and save costs

Physical security considerations

Does the cylinder require physical security characteristics to stop forced entry?

These security features are tested and verified in conjunction with the EN 1303:2015 standard to ensure the cylinder you require fits within the scope of requirements.

For example:

- Bump resistant pins to prevent cylinder bumping
- Anti-drill protection in the cylinder body and plug
- Anti-pick features to prevent manipulation

Consideration must be given to the specification of high security roses in exposed, external or sensitive areas.

Patent protection

When it comes to the security of a cylinder system, an important factor which is often overlooked, is that of patent protection and the prevention of illegal key duplication. With many low level cylinder systems, additional keys can be easily obtained without the owner's knowledge through local key cutting facilities and therefore put the security of the building at risk.

Patents are vitally important. Through unique design features incorporated within key and cylinder design, they can provide the system owners with the assurance that their building will remain secure. This prevents key duplication by unauthorised users and ensures legal protection is maintained throughout the lifetime of the patent.

It is important to dispel any myths around parties' claims of 'lifelong trademark protection' in regards to key copying, when compared to legally enforceable patent protection. The withdrawal of copyright protection on keys in August 1991 has now made it possible for anybody to produce and sell most types of keys, therefore removing the security of this protection.

In simple terms; no patent, no protection.

If key copy protection is a requirement, then a solution with a current patent is the only way to validate that the system you are looking to implement has legally enforceable protection.

What balance between security and convenience is needed?

If it is possible for anybody to obtain a key - your assets, buildings and staff could be at risk. On the other hand if spare keys for legitimate users are difficult to obtain, this can be inconvenient. There are a range of master key systems available that can suit your requirement for factory only supplied and/or local key cutting availability.

What types of cylinder are required for the application?

Many buildings require a number of cylinder profiles to work in partnership with various types of locking hardware. You may also want to consider specific finish requirements so that the cylinder suites with the rest of the door hardware.

What types of thumb turn are required for the application?

Many of our cylinder systems are supplied with an oval-style turn as standard, however we have a range of alternative thumb turns for Euro and UK oval profile cylinders to compliment the rest of the building's door hardware.

Are there any accessibility requirements?

If there is a need to meet the guidance of BS 8300, a large thumb turn may be required or solutions that require less grip to improve accessibility of a building.

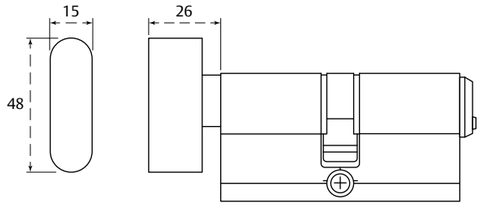

Selecting the correct cylinder size

Specifying the correct cylinder length is important not only for aesthetic appearance, but also for security purposes.

It is essential to ensure that the cylinder is as flush with the surrounding hardware as possible to reduce the opportunity for the cylinder to be removed. A flush fitted cylinder will also reduce movement over time and increase the longevity of the product.

When choosing a cylinder length there are three factors to consider:

1. Door thickness
2. Hardware thickness (e.g. cylinder roses)
3. Lock position

In most applications, the mortice lock will be fitted on the door centreline. Therefore, a standard equal length cylinder can be used. However, if the lock is fitted off-centre then an offset cylinder needs to be specified.

Euro and UK oval cylinders

How to measure an equal length double cylinder

Door thickness
+ total hard ware thickness
= overall cylinder length

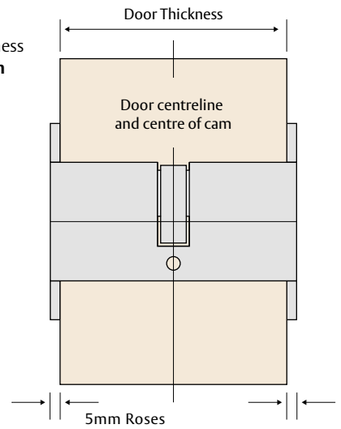

How to measure an offset cylinder length

(Measurement 1
+ hardware thickness)
+ (measurement 2
+ hardware thickness)
= overall cylinder length

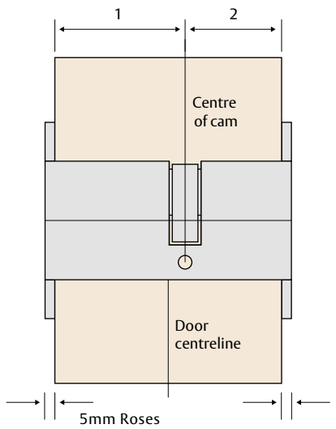

ASSA accessory sets

Standard accessory sets for Scandinavian oval cylinders used with Modular and Connect locks are available in four sizes. These are designed to be fitted to a standard 44mm or 54mm door. For security reasons it is imperative that the cylinder does not protrude more than 2mm from the face of the cylinder ring.

If it is necessary to fit a cylinder to a door of unusual thickness, we can supply different sizes of screws and cylinder rings. Extension pieces, which bring the cylinder further out from the centre line of the door, are also available. Please contact your ASSA ABLOY Vantage Partner for further details.

Accessory sets Scandinavian oval cylinders

Door thickness	256 Ext. Cyl. Ring Int. Turn	6256 Ext. Cyl. Ring Int. Cyl. Ring	18256 Ext. Cyl. Ring Int. Blind Rose	2356 Ext. Blind Rose Int. Cyl. Ring
44mm	18mm	18mm	18mm	18mm
54mm	13mm	13mm	13mm	13mm

Accessory sets for Scandinavian round cylinders used with Modular and Connect locks are available in two sizes. Combined with extension pieces and longer screws, they are suitable for door thicknesses up to 100mm.

Accessory sets Scandinavian round cylinders

Door thickness	3212 Ext. Sleeve Double	3212B Ext. Sleeve Single
44mm	13mm	13mm
54mm	8mm	8mm

High security cylinder escutcheons for Euro Profile cylinders used with Compact locks are available in two sizes: 6mm and 8mm. As these cylinders can be ordered in size increments of 5mm, the correct size of cylinder should be specified to suit the door thickness and escutcheon size selected. A full range of decorative accessory sets for Euro and UK oval profile cylinders are also available.

Scandinavian cylinders

Step 1: From the centre of the door, add the cylinder length and half of the lockcase width together e.g. 31mm + 9.25mm

Step 2: Subtract half the door thickness from the cylinder length to give the protrusion of cylinder from the door face e.g. 40.25mm – 22mm = 18.25mm

Step 3: Specify the correct accessory size, ensuring the cylinder does not protrude more than 2mm from the face of the cylinder ring for security reasons. In this example it would be the 18.25mm accessory kit

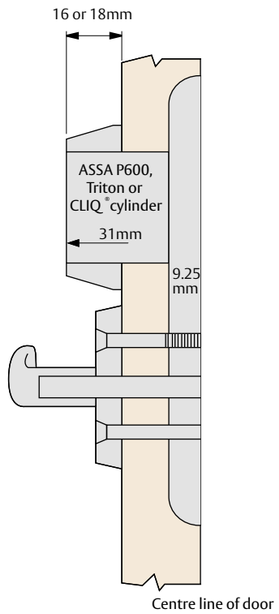

What additional cylinder functions are required?

Clutch release and anti-barricade cylinder

Designed to prevent somebody on the inside of the door from holding the turn and locking key-holders out. Insertion of the key disengages the clutch which allows the turn to rotate freely without engaging the cam.

Classroom functionality

The classroom function in a thumb turn cylinder makes it possible to rotate the thumb turn in one direction only i.e. clockwise or anti-clockwise.

This is often used to make sure that a person inside a room cannot lock another person out, but can always escape in an emergency. The cylinder is also clutch release as standard so somebody in the room cannot prevent a key-holder from entering.

Dual action and emergency functionality

Under normal circumstances if the occupant of a building leaves their key in a cylinder at any angle, other key-holders are prevented from entering the premises as the cylinder is blocked by the internal key.

A dual action and emergency function cylinder allows key-holders to enter the premises even if the occupant has left the key in the cylinder. This is an ideal solution for residential care homes or apartment buildings.

Maintenance of cylinders and padlocks

Our cylinders and padlocks are made to extremely fine manufacturing tolerances. Like any mechanical device used on a daily basis, certain preventive maintenance measures are essential to ensure trouble-free operation and longevity of the products.

Here are our maintenance tips:

1. From install and at least every six months thereafter, cylinders and padlocks should be lubricated using ASSA ABLOY lock spray. More frequent lubrication may be required on doors in constant use or harsh environmental conditions
2. Graphite is not recommended for use with cylinders, and oil should never be used
3. Do not paint cylinders and keep metal filings away from them, as this can clog the mechanism
4. ASSA ABLOY lock spray is specially formulated to avoid clogging or damage to the cylinder mechanism, especially on ASSA CLIQ® electronic cylinders. It is therefore recommended instead of conventional lubricant sprays
5. The use of ASSA ABLOY lock spray is recommended before the winter season on products fitted in an external environment. This will overcome problems with frost and condensation
6. If a cylinder is frozen, ASSA ABLOY lock cleaner may be used to de-ice it. Afterwards, re-lubricate the cylinder using ASSA ABLOY lock spray
7. To ensure correct tolerances are maintained, only original ASSA ABLOY key blanks should be used, they should only be cut by an approved stockist

Please see cylinder accessories section for products to support maintenance.

ASSA ABLOY
Opening Solutions

Legislation

EN 1303 – Cylinders

Cylinders are rated according to the British and European standard EN 1303.

EN 1303:2015 classifies cylinders for locks using an 8 digit coding system. Each digit refers to a particular feature of the product measured against the standard's performance requirements.

EN 1303 classification key

	EN 1303:2015 Grading scope
CATEGORY OF USE For use by people who will generally exercise care when using the products, with a small chance of misuse. **Grade 1:** Keys shall resist a torque of 2.5Nm, and still be usable	(1)
DURABILITY Tests the durability of the product through various cycle tests. **Grade 4:** 25,000 test cycles **Grade 5:** 50,000 test cycles **Grade 6:** 100,000 test cycles	(4/5/6)
DOOR MASS No requirement.	(0)
FIRE BEHAVIOUR AND RESISTANCE **Grade 0:** not approved for use on fire resistant / smoke control door assemblies **Grade A:** suitable for use on smoke control door assemblies **Grade B:** suitable for use on fire resistant and smoke control doors	(0/A/B)
SAFETY No requirement.	(0)
CORROSION RESISTANCE Corrosion resistance to EN 1670 Neutral Salt Spray test and operation of the product at extreme temperatures. On completion of the test, the cylinder must operate using a maximum 1.5Nm torque on the key. **Grade 0:** no corrosion requirement; no temperature requirement **Grade A:** high corrosion resistance; no temperature requirement **Grade B:** no corrosion requirement; temperature requirement: from – 25 °C to + 65 °C **Grade C:** high corrosion resistance; temperature requirement: from – 25 °C to + 65 °C	(0/A/B/C)
KEY RELATED SECURITY (see table opposite) Six grades are identified.	(1-6)
ATTACK RESISTANCE (see table opposite) Five grades of resistance against drilling and mechanical attack are identified in accordance.	(0/A/B/C/D)

Key related security

Security rating	Grade 1	Grade 2	Grade 3	Grade 4	Grade 5	Grade 6
Minimum number of effective differs	100	300	15,000	30,000	30,000	100,000
Minimum number of movable detainers	2	3	5	5	6	6
Maximum number of identical steps	100	70	60	60	60	50
Direct coding on key*	-	-	No	No	No	No
Operation of security mechanism (Nm)	1.5	1.5	1.5	1.5	1.5	1.5
Torque resistance of cylinder/plug (Nm)	2.5	5	15	15	15	15

*Direct Coding on a key is a marking on the key that allows the key steps to be determined without reference to another data source. Direct key coding is not permitted on keys for the key related security grades 3 to 6 as specified above.

Attack resistance

Attack resistance rating	Grade 0	Grade A	Grade B	Grade C	Grade D
Drilling attack (minutes)	-	3/5	5/10	3/5	5/10
Chisel attack (blows)	-	30	40	30	40
Twisting attack (twists)	-	20	30	20	30
Plug extraction, force – Net/total kN/mins	-	-	-	10 5/10	15 5/15
Torque resistance (Nm)	-	20	30	20	30

ASSA ABLOY
Opening Solutions

EN 12320 – padlocks and padlock fittings

EN 12320 classifies padlocks and padlock fittings by using an 8 digit coding system. Each digit refers to a particular feature of the product measured against the standard's performance requirements.

EN 12320 classification key

	EN 12320:2012 Grading scope
CATEGORY OF USE **Grade 1:** for use by people with a high incentive to exercise care and with a small chance of misuse.	(1)
DURABILITY **Grade 0:** no requirements. **Grade 1:** 10,000 cycles.	(0/1)
DOOR MASS No requirement.	-
FIRE BEHAVIOUR AND RESISTANCE No requirement.	-
SAFETY No requirement.	-
CORROSION RESISTANCE The padlock shall be exposed to a neutral salt spray test in accordance with EN 1670. On completion of the test, the cylinder must operate using a maximum 2.5Nm torque on the key. **Grade 0:** no defined corrosion resistance; **Grade 1:** 24h +1h/-0 h **Grade 2:** 48h +1h/-0 h **Grade 3:** 96h +1h/-0 h **Grade 4:** 240h +1h/-0 h **Grade 5:** 480h +1h/-0 h	(0-5)
KEY RELATED SECURITY (see table opposite) Included within security/attack resistance testing Padlocks shall have a minimum of (*n*) effective key differs dependent on security grade	-
ATTACK RESISTANCE (see table opposite) Six grades of resistance against drilling and mechanical attack are identified in accordance.	(1-6)

Key related security

Padlocks security rating	Grade 1	Grade 2	Grade 3	Grade 4	Grade 5	Grade 6
Key retained in open position (yes/no)	-	-	-	Yes	Yes	Yes
Minimum number of effective key differs (n)	300	1000	2,500	5,000	10,000	20,000
Non-interpassing of keys with one interval differ – torque on key (Nm)	1	1.5	1.5	1.5	1.5	1.5
Resistance to force on cylinder plug or locking mechanism (kN)	-	-	4	5	10	15
Resistance to torque on cylinder plug or locking mechanism (Nm)	-	2.5	5	15	20	30
Resistance to pulling of shackle and staple (kN)	3	5	15	30	70	100
Resistance to twisting of shackle and staple (Nm)	40	100	200	450	1200	2500
Resistance to cutting of shackle and staple (kN)	6	15	25	35	70	100
Resistance to impact on padlock body, shackle and staple at low temperature	-	-	1.25kg 800mm -20°C	3.05kg 800mm -20°C	6.55kg 1400mm -40°C	7.15kg 1500m -40°C
Resistance to drilling of padlock body, shackle and staple (min)	-	-	-	2	4	8
Resistance of sawing of body, shackle and staple (min)	-	-	-	2	4	8
Manual attack (min)	-	-	-	3	5	10

CEN grading of padlocks

CEN is an independent association that brings together the National Standardisation Bodies of 34 European countries.

When it comes to padlocks and security ratings, CEN have come together to provide a standardised approach for categorising and comparing padlocks across different manufacturers.

There are a total of 6 levels to the CEN rating for padlocks from 1 to 6. The criteria for each CEN assessment level is taken from the EN 12320 security criteria as shown in the table above.

ASSA ABLOY
Opening Solutions

Product selector

		keyPRIME™		keyMASTER™	P600	Triton² 3900	Triton² 5900
Specification requirements	For simple master key systems (up to 1,100 differs under a master key)	●		●	●	●	●
	For medium master key systems (up to 3,000 differs under a master key)			●	●	●	●
	For complex master key systems (up to 4,000 differs under a master key)			●		●	●
	For extremely complex master key systems (over and above 4,000 differs under a master key)						●
Technical features	Number of system pins	6		6	6	6	6
	Number of side pins					2	4
	Additional blocking feature e.g. sidebar/pins			●		●	●
	Number of usable differs	97,000		550,000	170,000	3.4m	1.5bn
	Patented key control	●		●	●	●	●
	Patent protection until	2036		2036	2026	2036	2036
	Anti pick features	●		●	●	●	●
	Anti bump features	optional		optional	●	●	●
	Drill protection in body and plug	●		●	●	●	●
	3D key copy protection					●	●
Keys	Key material	Nickel silver		Nickel silver	Nickel silver	Nickel silver	Nickel silver
	Replacements keys cut by manufacturer	●		●	●	●	●
	Key blanks and local key cutting available	●		●	●	●	●
Additional features	Classroom / clutch functions available	●		●	●	●	●
	Dual action / emergency function available				●	●	●
	Maximum cylinder size available (half Euro)	90mm (80/10)		90mm (80/10)	80mm (70/10)	80mm (70/10)	80mm (70/10)
	Maximum monoblock cylinder size available (Euro key/key & key/turn) *modular cylinders available for larger sizes	160mm (80/80)		160mm (80/80)	140mm (70/70)*	140mm (70/70)*	140mm (70/70)*
	Euro cylinder offset sizes available	●		●	●	●	●
	Rim cylinders	●		●	●	●	●
	Scandinavian oval cylinders	●		●	●	●	●
	Specialist cylinders: UK oval, mortice, cam lock			●	●	●	●
	Padlock integration option	●		●	●	●	●
Certification	EN 1303 durability grade	6		6	6	6	6
	EN 1303 key related security grade	5		6	6	6	6
	EN 1303 physical security grade	D		D	D	D	D
Fire rating	Timber FD30	●		●	●	●	●
	Timber FD60	●		●	●	●	●
	Metal FD120				●	●	●
	Metal FD240	●		●			

UNION keyPRIME™

keyPRIME™ is a sleek, modern cylinder system designed with economy, safety and security in mind for all modern building requirements. The cylinder platform boasts secure patented protection until 2036 and is tested to the stringent requirements of EN 1303:2015 for all security needs.

The solid 3mm reversible key is durable and rigid to withstand the toughest environments; designed with symmetrical faces and no sharp edges, the system is simple and easy to use as the key will work no matter which way it's inserted.

The removal of sharp edges and corners from the key design makes the system a perfect solution for healthcare and education applications, as the key is prevented from being used to cause harm to users, patients or pupils.

The 6 pin cylinder platform utilises robust dimple key technology which is designed for high use environments; the system is available in a range of cylinder profiles and functions to suit new specification requirements.

Range benefits

- Patent protection until 2036 with a multi-level key stop on both the cylinder and key preventing unlawful copying of keys and preventing unauthorised access
- Achieves Grade D, the highest level of attack resistance, within EN 1303:2015 which includes testing against; drilling, chisel attack, twisting and plug extraction (when used in conjunction with high security escutcheon)
- 97,000 keying combinations for average/medium master keying requirements
- Extended key neck for use with security hardware
- Simple to use reversible system with symmetrical faces and no sharp edges
- Secure key control with key blanks only available from approved stockists and dealers

Platform specification

Patent protection	2036
No. of pins	6 pins
System type	Reversible / flat key
Keying options	Master keyed, to pass or differ
Number of keys per cylinder	All cylinders supplied with two keys
Key thickness / material	3mm / Nickel silver
Extended key neck	Yes
Paracentric key profile	No
System pin material	Nickel silver
Key combinations	97,000
Durability	500,000 cycles (accelerated test)
Drill protection	5 minutes drilling resistance
Plug pull protection	15kN pulling resistance
Anti-pick features	Yes
Anti-bump features	Yes (KD product only)
Corrosion resistance	240 hours
Accessories	See cylinder accessory section for range of escutcheons, distance collars and padlock dust covers

Classification code

1	6	0	B	0	C	5	D*
(1)	(6)	(0)	(0/A/B)	(0)	(0/A/B/C)	(1-6)	(0/A/B/C/D)

EN 1303:2015

* When used in conjunction with high security escutcheon

5 YEAR GUARANTEE

EPD®

Certification

Certified in compliance with	EN 1303, EN 1634-1
Fire tested	Timber FD30/FD60, metal FD240
Kitemark accreditation	N/A
Guarantee	5 years

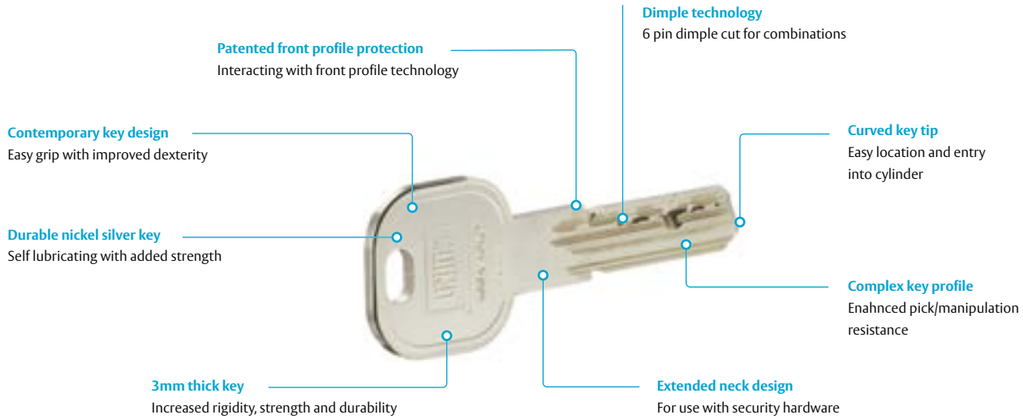

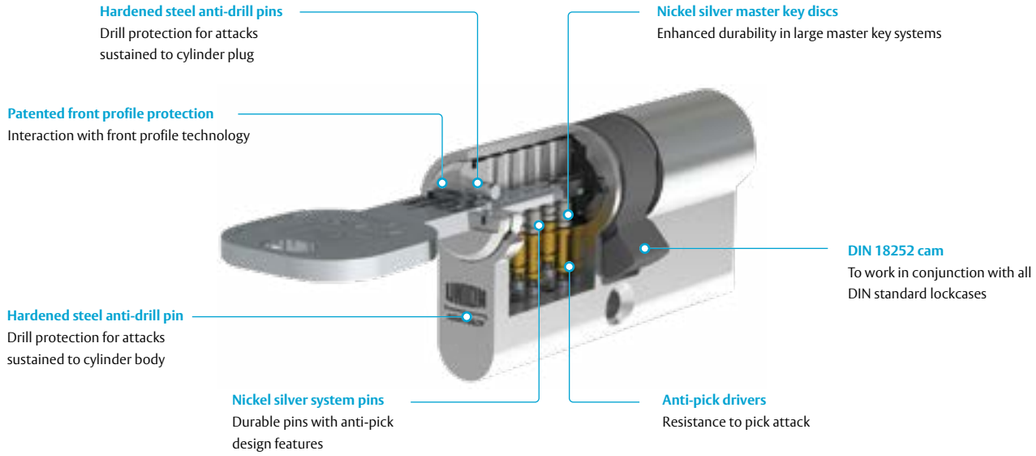

How to order this platform

Please use the reference table below to help identify product range part codes.

J	M	–	KP	ET	3040	SN

Packaging
J = Boxed
(All UNION cylinder products are supplied as boxed)

Keying code
M = Master keyed
(Leave out code if product is keyed to differ)

Key platform
KP = keyPRIME

Cylinder type
Euro profile
ES = Euro single
ED = Euro double
ET = Euro turn
Other cylinder shapes
RIM = Rim
SCAN = Scandinavian
CAM = Cam lock
Padlock
PAD = Padlock

Cylinder Llength
Euro profile
Euro cylinders available up to 80mm in length per side
Single cylinders stated as '3010' eg. 40mm
For key and turn cylinders, turn side is always identified first as in the example above T30/K40
Other cylinder shapes
Sizes not required to be stated

Finish
SN = Satin nickel

For master key enquiries: +44 (0)1902 364189 or **master.key@assaabloy.com**

keyPRIME™ key

For use with all UNION keyPRIME™ cylinders and padlocks.

Features and benefits

- A contemporary 3mm thick solid nickel silver key ensuring strength and longevity of use
- Protected by patent ensuring key blanks cannot be manufactured by unauthorised parties
- 6 specialised dimple cuts working in conjunction with the 6 pin cylinder system
- An extended key neck for use with security hardware with Euro profile cylinders

How to order

Product code	Description	Finish
J-PRIMEWMKEYS	KeyPRIME™ master key with cylinder	NS
J-PRIMEMKEY	KeyPRIME™ master key supplied later	NS
J-PRIMEWSKEYS	KeyPRIME™ servant key with cylinder	NS
J-PRIMEKEYS	KeyPRIME™ servant key supplied later	NS

Euro profile single cylinder

For use with locks accepting Euro profile cylinders.

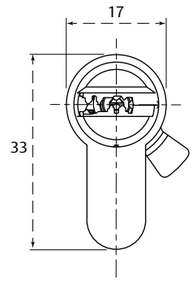

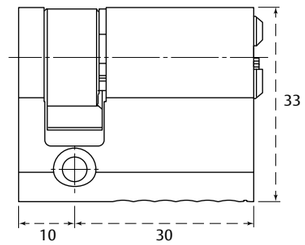

Features and benefits

- Single cylinders supplied with a multi position cam
- Multi position cam meets the requirements of the DIN 18252 standard
- Lengths starting at 30-10 (40mm) available in 5mm increments up to 80-10 (90mm)
- Drill protection in the cylinder plug and body

How to order

Product code	Description	Finish
JM-KPES3010SN	Single Euro cylinder 40mm	SN
JM-KPES3510SN	Single Euro cylinder 45mm	SN
JM-KPES4010SN	Single Euro cylinder 50mm	SN

Product codes in the table are configured as master keyed.
Other cylinder sizes available on request.

Euro profile double cylinder

For use with locks accepting Euro profile cylinders.

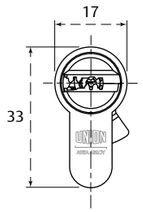

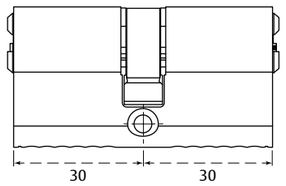

Features and benefits

- Lengths starting at 30-30 (63mm) available in 5mm increments up to 80-80 (160mm)
- Offset lengths also available (up to 80mm per side)
- Supplied with a DIN 18252 standard cam
- Drill protection in the cylinder plug and body

How to order

Product code	Description	Finish
JM-KPED3030SN	Double Euro cylinder 60mm	SN
JM-KPED3535SN	Double Euro cylinder 70mm	SN
JM-KPED4040SN	Double Euro cylinder 80mm	SN

Product codes in the table are configured as master keyed.
Other cylinder sizes available on request.

Euro profile key and turn cylinder

For use with locks accepting Euro profile cylinders.

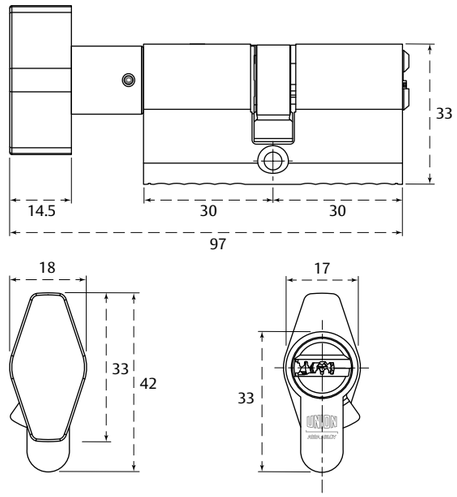

Features and benefits

- Lengths starting at 30-30 (63mm) available in 5mm increments up to 80-80 (160mm)
- Offset lengths also available (up to 80mm per side)
- Supplied with a DIN 18252 standard cam
- Drill protection in the cylinder plug and body
- Matching plug, housing and thumb turn finish
- Diamond style thumb turn supplied as standard
- Clutch release and classroom functions are available
- Handing of classroom function must be specified when placing order

How to order

Product code	Description	Finish
JM-KPET3030SN	Key and turn Euro cylinder 60mm	SN
JM-KPET3535SN	Key and turn Euro cylinder 70mm	SN
JM-KPET4040SN	Key and turn Euro cylinder 80mm	SN

Product codes in the table are configured as master keyed.
Other cylinder sizes available on request.

Rim cylinder

For use with nightlatches or other locking devices which are operated from a tail bar.

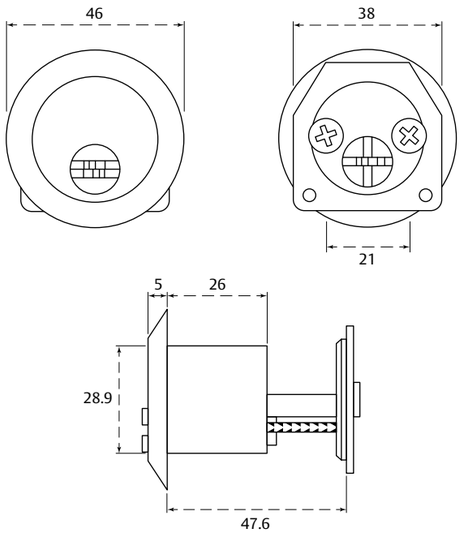

Features and benefits

- Cylinders fixed from outside with tailpiece passing through door into back of surface fixed lock
- Suitable for doors up to 54mm thick
- 32mm face diameter and 29mm body diameter
- 54mm tailpiece length for most common installations
- Drill protection in the cylinder plug and body
- Supplied with decorative rose, back plate and 2 connecting screws

How to order

Product code	Description	Finish
JM-KPRIMSN	Single rim cylinder with tail bar	SN

Product codes in the table are configured as master keyed.

Scandinavian oval cylinder

For use with Scandinavian oval profile lockcases.

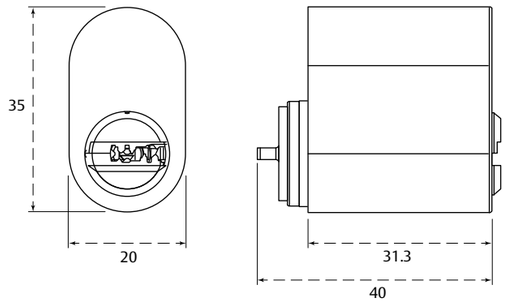

Features and benefits

- The cylinder is secured through the centre of the lockcase with two M5 hardened steel screws for increased security
- Gives key access for users from the inside or outside of door
- Available as an internal or external variant
- Body length of 31mm overall (41mm including cam)
- Drill protection in the cylinder plug and body

How to order

Product code	Description	Finish
JM-KPSCANOUTERSN	Scandinavian oval external cylinder	SN
JM-KPSCANINNERSN	Scandinavian oval internal cylinder	SN

Product codes in the table are configured as master keyed.

Cam lock

For use as letterbox, drawer or cabinet locks.

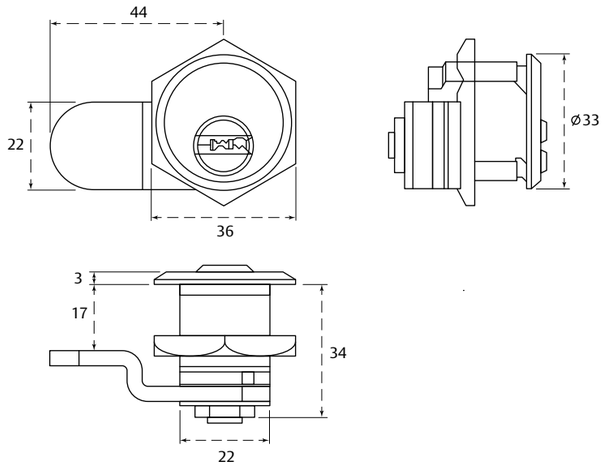

Features and benefits

- 33mm face diameter and 22mm body diameter
- Key retaining feature to ensure the cylinder is never left unlocked
- 22mm width tail with 44mm projection from center of cylinder
- Optional angled cam

How to order

Product code	Description	Finish
JM-KPCAMSN	Cam lock	SN

Product codes in the table are configured as master keyed.

Grade 3 brass padlock

Grade 3 brass padlock for domestic or commercial use, for both internal and external applications such as storage units and gates.

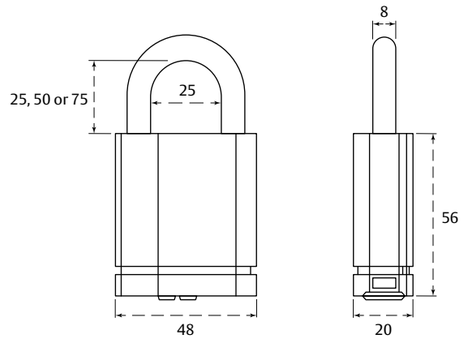

Features and benefits

- Exceeds the requirements of EN 12320:2012 Grade 3 security
- Key retaining feature to ensure the padlock is never left unlocked
- 8mm diameter hardened boron steel shackle
- 48 x 20mm brass body
- Chrome-plated finish
- 25mm standard shackle clearance
- 50mm and 75mm shackle clearance options also available
- Dust cover available as an extra accessory for enhanced weather and particle protection

How to order

Product code	Description	Finish
JM-KPPAD-25	Grade 3 padlock with 25mm shackle clearance	CH
JM-KPPAD-50	Grade 3 padlock with 50mm shackle clearance	CH
JM-KPPAD-75	Grade 3 padlock with 75mm shackle clearance	CH

Product codes in the table are configured as master keyed.

UNION keyMASTER™

KeyMASTER, is UNION's flagship master key platform with trusted serrated key technology along with a superior, robust build quality. The range has secure patent protection until 2036 and is tested to the stringent requirements of EN 1303:2015.

The groove detector patent, with a moving detector pin and front profile technology enhances the security of the cylinder and makes it even harder for keys to be unlawfully replicated. The specialised patented groove detector cut works in conjunction with a moving element inside the cylinder to prevent unauthorised key duplication. In addition, the 2.9mm thick key and oversized key bow offers added strength and ease of use. The 6 pin cylinder platform utilises trusted serrated key technology and a robust cylinder design which is perfect for large master key system requirements and for use in the toughest of environments.

A wide variety of keyMASTER™ cylinder profiles and functions are available in a selection of high quality finishes. The range can be specified to ensure all modern specification requirements are accommodated, and backed with the assurance of a high quality British product design.

Range benefits

- Patent protection until 2036 with a patented groove detector technology on both the key and cylinder, preventing unlawful duplication of keys and unauthorized access
- Achieves Grade D, the highest level of attack resistance and Grade 6, the highest grade of durability, within EN 1303:2015 which includes testing against; drilling, chisel attack, twisting and plug extraction*
- Over 550,000 keying combinations for large master keying requirements
- 240 hours corrosion resistance, above and beyond the 96 hours standard requirement
- Trusted serrated technology on a traditional product design
- Oversized solid key bow and blade design, made from high quality nickel silver which offers excellent durability
- Extended key neck for use with security escutcheons
- Each master keyed cylinder is provided without keys
- Secure key control with key blanks only available from approved stockists and dealers
- A comprehensive range of cylinder profiles, functions and finishes are available
- Ideal for local government, healthcare and education applications

* when used in conjunction with high security escutcheon

Platform specification

Patent protection	2036
No. of pins	6 pins
System type	Serrated / sawn key
Keying options	Master keyed only
Number of keys per cylinder	All master keyed cylinders supplied less keys
Key thickness / material	2.9mm / Nickel silver
Extended key neck	Yes
Paracentric key profile	Yes
System pin material	Nickel silver
Key combinations	550,000
Durability	500,000 cycles (accelerated test)
Drill protection	5 minutes drilling resistance
Plug pull protection	15kN pulling resistance
Anti-pick features	Yes
Anti-bump features	Yes (KTD Product)
Corrosion resistance	240 hours

Classification code

1	6	0	B	0	C	6	D*
(1)	(6)	(0)	(0/A/B)	(0)	(0/A/B/C)	(1-6)	(0/A/B/C/D)

EN 1303:2015

* When used in conjunction with high security escutcheon

10 YEAR GUARANTEE

EPD®

Certification

Certified in compliance with	EN 1303, EN 1634-1
Fire tested	Timber FD30/FD60, metal FD240
Kitemark accreditation	N/A
Guarantee	10 years

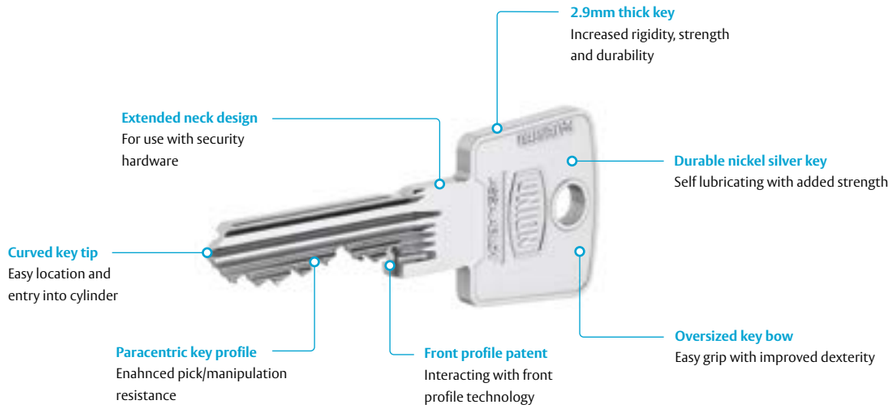

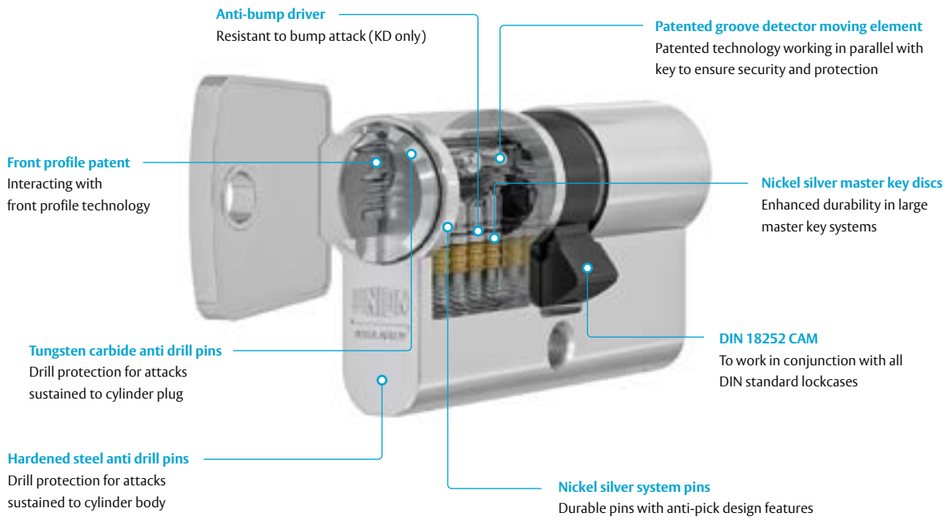

How to order this platform

Please use the reference table below to help identify product range part codes.

Optional

J	M	2	KMET	3040	SN	3	L
Packaging code	**Keyring type**	**Turn style**	**Product code**	**Length**	**Finish**	**Handing**	**Turn function**
J = Boxed	M = Master keyed	- = Round	KMED = Euro double	Single available 30-90mm	SN = Brushed satin nickel	L = Left	2 = Clutch release
All UNION cylinder products are supplied as boxed	- = To differ	1 = Diamond	KMES = Euro single	See size table or UNION catalogue for more details	SC = Satin chrome	R = Right	3 = Classroom function
		2 = Stadium (default)	KMET = Euro key and turn	For key and turn cylinders, the first length denotes the turn side	PL = Polished lacquer brass	(Only applicable for classroom function)	(Leave out code if these functions are not required)
		3 = Large	KMOD = Oval double		CH = Chrome		
			KMOS = Oval single		SB = Satin brass		
			KMOT = Oval key and turn		AB = Antique brass		

For master key enquiries: +44 (0)1902 364189 or **master.key@assaabloy.com**

High specification finishes

All of the keyMASTER™ cylinders are exclusively available in a choice of six high specification finishes including:

Brushed satin nickel

Code: SN
(Standard finish)

Satin chrome

Code: SC

Chrome

Code: CH

Polished brass

Code: PL

Satin brass

Code: SB

Antique brass

Code: AB

Thumb turn range

We are proud to offer a range of thumb turns to compliment the keyMASTER™ cylinder range

Stadium turn

Round turn

Diamond turn

Large turn

If there is a need to meet the guidance of BS 8300, a large thumb turn may be required or solutions that require less grip to improve accessibility of a building.

keyMASTER™ keys

For use with all UNION keyMASTER™ cylinders and padlocks.

Features and benefits

- A precision engineered 2.9mm thick solid nickel silver key ensuring strength and longevity of use
- Protected by patent ensuring key blanks cannot be manufactured by unauthorized parties
- Patented groove detector technology working in conjunction with the 6 pin cylinder system

How to order

Product code	Description	Finish
J-KMMWKEY	keyMASTER™ master key with cylinder	NS
J-KMMLKEY	keyMASTER™ master key supplied later	NS
J-KMSWKEY	keyMASTER™ servant key with cylinder	NS
J-KMSLKEY	keyMASTER™ servant key supplied later	NS

Euro profile single cylinder

For use with locks accepting Euro profile single cylinders.

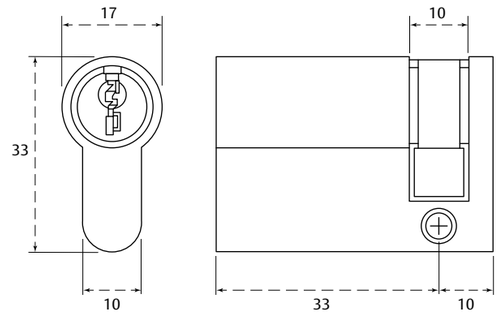

Features and benefits

- Supplied with a DIN 18252 standard cam
- Lengths starting at 30-10 (43mm) available in 5mm increments up to 80-10 (90mm)
- Drill protection in the cylinder plug and body
- All cylinders provided with a M5 fixing screw
- Decorative and security accessories are available

How to order

Product code	Description	Finish
JM-KMES3010	Single Euro cylinder 40mm	Add suffix: SN / SC / PL / CH / SB / AB
JM-KMES3510	Single Euro cylinder 45mm	
JM-KMES4010	Single Euro cylinder 50mm	

Product codes in the table are configured as master keyed.
Other cylinder sizes available on request.

Euro profile double cylinder

For use with locks accepting Euro profile double cylinders.

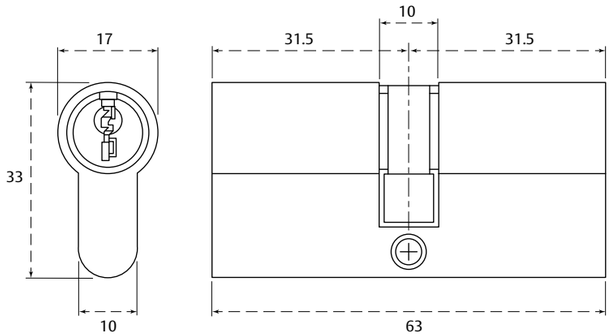

Features and benefits

- Lengths starting at 30-30 (63mm) available in 5mm increments up to 80-80 (160mm)
- Offset lengths also available (up to 80mm per side)
- Supplied with a DIN 18252 Standard cam
- Drill protection in the cylinder plug and body
- All cylinders provided with a M5 fixing screw
- Decorative and security accessories are available

How to order

Product code	Description	Finish
JM-KMED3030	Double Euro cylinder 60mm	Add suffix: SN / SC / PL / CH / SB / AB
JM-KMED3535	Double Euro cylinder 70mm	
JM-KMED4040	Double Euro cylinder 80mm	

Product codes in the table are configured as master keyed.
Other cylinder sizes available on request.

Euro profile key and turn cylinder

For use with locks accepting Euro profile key and turn cylinders.

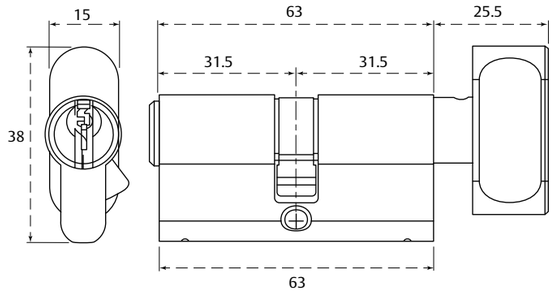

Features and benefits

- Lengths starting at 30-30 (63mm) available in 5mm increments up to 80-80 (160mm)
- Offset lengths also available (up to 80mm per side)
- Supplied with a DIN 18252 Standard cam
- Drill protection in the cylinder plug and body
- Decorative and security accessories are available
- All cylinders provided with a M5 fixing screw
- Stadium style thumb turn supplied as standard
- Clutch release and classroom functions are available

How to order

Product code	Description	Finish
JM-KMET3030	Key and turn (round) Euro cylinder 60mm	Add suffix: SN / SC / PL / CH / SB / AB
JM-KMET3535	Key and turn (round) Euro cylinder 70mm	
JM-KMET4040	Key and turn (round) Euro cylinder 80mm	
JM1KMET3030	Key and turn (diamond) Euro cylinder 60mm	Add suffix: SN / SC / PL / CH / SB / AB
JM1KMET3535	Key and turn (diamond) Euro cylinder 70mm	
JM1KMET4040	Key and turn (diamond) Euro cylinder 80mm	
JM2KMET3030	Key and turn (stadium) Euro cylinder 60mm	Add suffix: SN / SC / PL / CH / SB / AB
JM2KMET3535	Key and turn (stadium) Euro cylinder 70mm	
JM2KMET4040	Key and turn (stadium) Euro cylinder 80mm	
JM3KMET3030	Key and turn (large) Euro cylinder 60mm	Add suffix: SN / SC / PL / CH / SB / AB
JM3KMET3535	Key and turn (large) Euro cylinder 70mm	
JM3KMET4040	Key and turn (large) Euro cylinder 80mm	

Additional options:
2 – clutch release, **3L**– classroom left hand, **3R** – classroom right hand.
Please note: Handing of classroom function must be specified when placing order.
Product codes in the table are configured as master keyed. Other cylinder sizes available on request.

Oval profile single cylinder

For use with lockcases accepting oval profile cylinders.

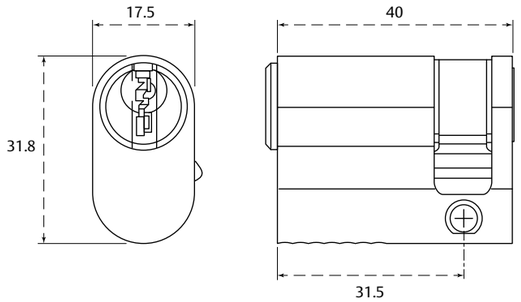

Features and benefits

- Bespoke UK oval cam to work in conjunction with UK oval locks
- Lengths starting at 30-10 (41.5mm) available in 5mm increments
- Drill protection in the cylinder plug and body
- All cylinders provided with a M5 fixing screw
- Decorative accessories are available

How to order

Product code	Description	Finish
JM-KMOS3010	Single oval cylinder 40mm	Add suffix: SN / SC / PL / CH / SB / AB
JM-KMOS3510	Single oval cylinder 45mm	
JM-KMOS4010	Single oval cylinder 50mm	

Product codes in the table are configured as master keyed.
Other cylinder sizes available on request.

Oval profile double cylinder

For use with lockcases accepting oval profile cylinders.

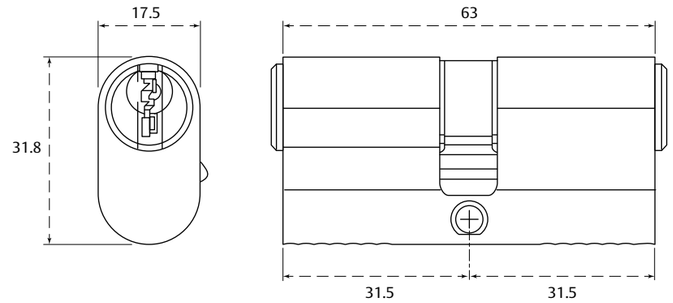

Features and benefits

- Bespoke UK oval cam to work in conjunction with UK oval locks
- Lengths starting at 30-30 (63mm) available in 5mm increments
- Offset lengths also available
- Drill protection in the cylinder plug and body
- All cylinders provided with a M5 fixing screw
- Decorative accessories are available

How to order

Product code	Description	Finish
JM-KMOD3030	Double oval cylinder 60mm	Add suffix: SN / SC / PL / CH / SB / AB
JM-KMOD3535	Double oval cylinder 70mm	
JM-KMOD4040	Double oval cylinder 80mm	

Product codes in the table are configured as master keyed.
Other cylinder sizes available on request.

Oval profile key and turn cylinder

For use with lockcases accepting oval profile cylinders.

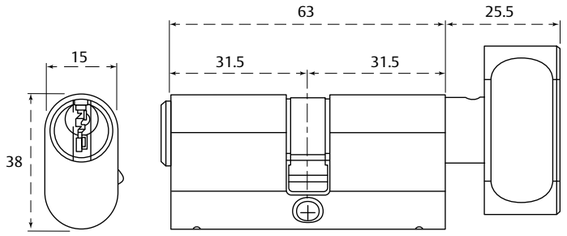

Features and benefits

- Bespoke UK oval cam to work in conjunction with UK oval locks
- Lengths starting at 30-30 (63mm) available in 5mm increments, with offset lengths also available
- Drill protection in the cylinder plug and body
- All cylinders provided with a M5 fixing screw
- Decorative accessories are available
- Stadium style thumb turn supplied as standard
- Clutch release and classroom functions are available

How to order

Product code	Description	Finish
JM-KMOT3030	Key and turn (round) oval cylinder 60mm	Add suffix: SN / SC / PL / CH / SB / AB
JM-KMOT3535	Key and turn (round) oval cylinder 70mm	
JM-KMOT4040	Key and turn (round) oval cylinder 80mm	
JM1KMOT3030	Key and turn (diamond) oval cylinder 60mm	Add suffix: SN / SC / PL / CH / SB / AB
JM1KMOT3535	Key and turn (diamond) oval cylinder 70mm	
JM1KMOT4040	Key and turn (diamond) oval cylinder 80mm	
JM2KMOT3030	Key and turn (stadium) oval cylinder 60mm	Add suffix: SN / SC / PL / CH / SB / AB
JM2KMOT3535	Key and turn (stadium) oval cylinder 70mm	
JM2KMOT4040	Key and turn (stadium) oval cylinder 80mm	
JM3KMOT3030	Key and turn (large) oval cylinder 60mm	Add suffix: SN / SC / PL / CH / SB / AB
JM3KMOT3535	Key and turn (large) oval cylinder 70mm	
JM3KMOT4040	Key and turn (large) oval cylinder 80mm	

Additional options:
2 – clutch release, **3L**– classroom left hand, **3R** – classroom right hand.
Please note: Handing of classroom function must be specified when placing order.
Product codes in the table are configured as master keyed. Other cylinder sizes available on request.

Rim cylinder

For use with nightlatches or other locking devices which are operated from a tail bar.

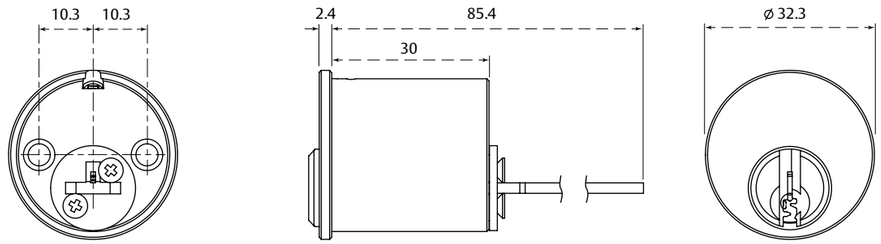

Features and benefits

- Cylinders fixed from outside with tailpiece passing through door into back of surface fixed lock
- Suitable for doors up to 54mm thick
- 32.5mm face diameter and 29mm body diameter
- Supplied with x 2 connecting screws
- 51mm tail piece length (from cylinder body to tip) for most common installations
- Drill protection in the cylinder plug and body
- Supplied with ball bearings and 2 x 45mm connecting screws

How to order

Product code	Description	Finish
JM-KMRIM	Single rim cylinder with tail bar	Add suffix: SN / SC / PL / CH / SB / AB

Product codes in the table are configured as master keyed.

Rim mortice cylinders

For use with narrow style mortice locks or American style operating from a 32mm threaded cylinder.

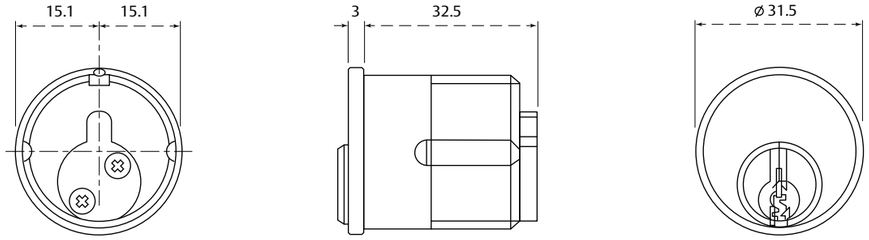

Features and benefits

- Cylinder screws into lockcase 32 TPI (threads per inch) with cam driver on back
- Adams Rite style cam provided as standard
- 32mm length from shoulder of the cylinder face to the back of the cylinder

How to order

Product code	Description	Finish
JM-KMSCREWIN	Single mortice cylinder 32mm length	Add suffix: SN / SC / PL / CH / SB / AB

Product codes in the table are configured as master keyed.

Scandinavian oval cylinder

For use with Scandinavian oval profile lockcases.

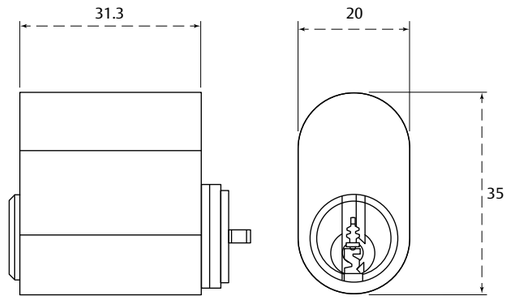

Features and benefits

- The cylinder is secured through the centre of the lockcase with two M5 hardened steel screws for increased security
- Gives key access for users from inside or outside of the door
- Available as an internal or external variant
- Body length of 31mm overall (41mm including cam)
- Drill protection in the cylinder plug and body

How to order

Product code	Description	Finish
JM-KMSCANOUTER	Scandinavian oval outer cylinder	Add suffix: SN / SC / PL / CH / SB / AB
JM-KMSCANINNER	Scandinavian oval inner cylinder	

Product codes in the table are configured as master keyed.

P600

A robust, high security cylinder with secure patent protection until 2026. Tested to the highest demands of EN 1303:2015, the P600 range has innovative technology at its core. Thanks to precision engineering and cross function compatibility, the platform is unrivalled in its class.

Based on a new cutting edge pin technology, the paracentric key profile and elongated key neck allows the use of the system in conjunction with security accessories on Euro profile cylinders.

The distinctive 6 pin double tipped keying system utilises a 12 coded key cut for excellent master keying capability, suited for medium to large scale project applications such as healthcare, education and local government applications.

The durable nickel silver pin technology ensures smooth operation and years of reliable use in the toughest of environments.

Range benefits

- Secure patent protection to 2026
- Prevents illegal duplication of keys, key blanks and cylinder systems
- Meets the requirements of EN 1303:2015 Grade 6/D and SSF 3522, Class 3 and 5
- Innovative double tipped pins with enhanced anti-pick and bump protection for increased security and resistance when in use
- 170,000 keying combinations for medium to large master keying requirements
- Paracentric keyway for enhanced anti-pick and manipulation features
- Extended key neck for use with security hardware

Platform specification

Patent protection	2026
No. of pins	6 pins
System type	Serrated / sawn key
Keying options	Master keyed, to pass or differ
Number of keys per cylinder	Master keyed supplied with 2 keys. Standard differ supplied with 2 keys.
Key thickness / material	3mm / Nickel silver
Extended key neck	Yes
Paracentric key profile	Yes
System pin material	Nickel silver
Key combinations	170,000
Durability	100,000 cycles
Drill protection	5 minutes drilling resistance
Plug pull protection	15kN pulling resistance
Anti-pick features	Yes
Anti-bump features	Yes
Corrosion resistance	240 hours
Accessories	See cylinder accessory section for range of escutcheons, accessory kits, extension pieces and protective covers

Step/protection level

P600 comes with the following protection level:

Step 4: Stockist registration
Keys are available from authorised ASSA ABLOY Vantage Partners. A registration procedure is agreed between the customer and a specific stockist, setting out the procedure for obtaining extra keys.

Classification code

1	6	0	B	0	C	6	D*
(1)	(6)	(0)	(0/A/B)	(0)	(0/A/B/C)	(1-6)	(0/A/B/C/D)

EN 1303:2015

* When used in conjunction with high security escutcheon

10 YEAR GUARANTEE

EPD®

Certification

Certified in compliance with	EN 1303, EN 1634-1
Fire tested	Timber FD30/FD60, metal FD120
Kitemark accreditation	N/A
Guarantee	10 years

How to order (this platform)

Please use the product code breakdown table below to help identify product range part codes.

105490 | 090 | 13

Unique cylinder reference
A unique six-digit prefix code is given to each cylinder to identify it within the ASSA ABLOY platforms

Keying code
090 = Master keyed
099 = To pass
400 = Standard differ (Step 4)
300 = Standard differ (Step 3)

Finish
(product finished are denoted by the last two digits of the product code)
13 = Satin chrome
20 = Polished brass
11 = Bright chrome
18 = Matte black

For master key enquiries: +44 (0)1902 364189 or **master.key@assaabloy.com**

Contact our master key team for ordering enquiries on ASSA master key systems.

P600 key

For use with all P600 cylinders and padlocks.

Features and benefits

- A precision engineered 3mm thick solid nickel silver key ensuring strength and longevity of use
- Protected by patent ensuring key blanks cannot be manufactured by unauthorised parties
- 12 specialised cuts working in conjunction with the 6 pin cylinder system
- An extended key neck for use with security hardware with Euro profile cylinders

How to order

Product code	Cylinder reference	Description	Finish	Cylinder keying
10515200000	P600 key	P600 cut key supplied with cylinder	NS	Master keyed or differ
10515200000	P600 key	P600 cut key supplied later	NS	Master keyed or differ

Scandinavian oval cylinder

For use with modular and narrow profile lockcases.

P603

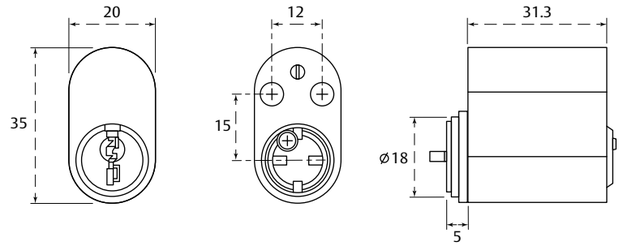

P603

P601

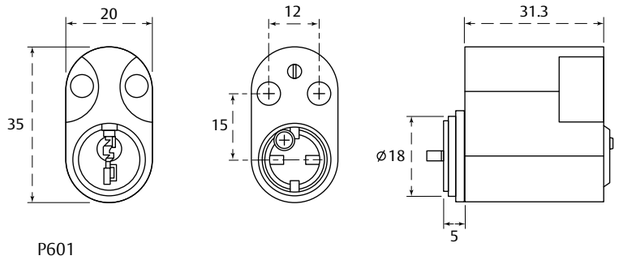

P601

Features and benefits

- The cylinder is secured through the center of the lockcase with two hardened steel screws for increased security
- Fixing screws supplied with accessory sets such as 256 accessory or 18256 accessory
- Extension pieces are available in four sizes to suit thicker doors: 8, 10, 12.5 and 18mm

How to order

Product code	Cylinder reference	Description	Finish
105110090	P601	Single cylinder (outside)	Add suffix: 13 = SC 20 = B
105112090	P603	Single cylinder (inside)	
105111090	P602	Double cylinder	

Product codes in the table are configured as master keyed.

Scandinavian rim cylinder

For use with rim and narrow profile lockcases.

P607

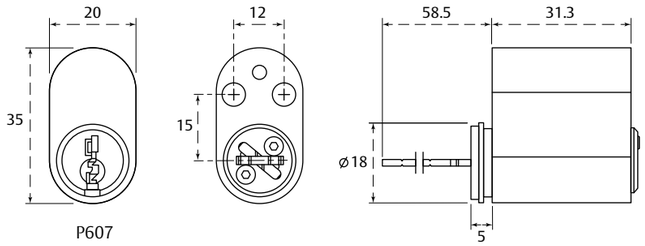

P607

P3607

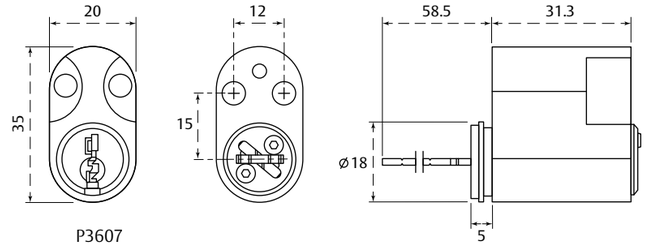

P3607

Features and benefits

- The cylinder is fixed to the lockcase with two brass screws which can be cut to length
- Supplied with 50mm tailpiece as standard. 150mm length extended tail piece available on request
- Distance rings available in sizes, 5, 10, 15, 20, 25, 30 and 37mm
- Sleeve is not required when used with narrow profile lockcases and accessories
- When using S4 narrow profile double accessories (only), specify two P607 single outside cylinders rather than a double cylinder

How to order

Product code	Cylinder reference	Description	Finish
105113090	P607	Single rim cylinder (outside)	Add suffix: 13 = SC 20 = B
105114090	P3607	Single rim cylinder (inside)	
105115090	P1307	Double rim cylinder	

Product codes in the table are configured as master keyed.

Scandinavian round cylinder

For use with modular lockcases.

P611

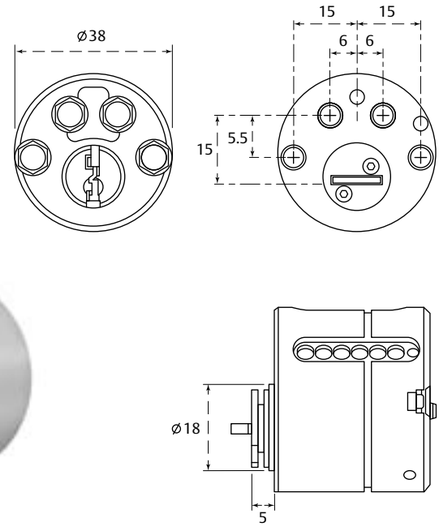

P613

Features and benefits

- The ultimate level of physical security is assured when using this cylinder
- With enhanced drill protection on the external side and secured through the lockcase with four high security hardened steel screws (supplied with the accessory set) boasting extreme strength and resistance to a snap or twist attack
- An anti-tamper plate ensures that only key holders are able to remove this cylinder from the door once installed

How to order

Product code	Cylinder reference	Description	Finish
105116090	P611	Single cylinder (outside)	Add suffix: 13 = SC 20 = B
105118090	P613	Single cylinder (inside)	
105117090	P612	Double cylinder	

Product codes in the table are configured as master keyed.

Round mortice cylinder

For use with American style locking devices accepting screw-in / ANSI cylinders.

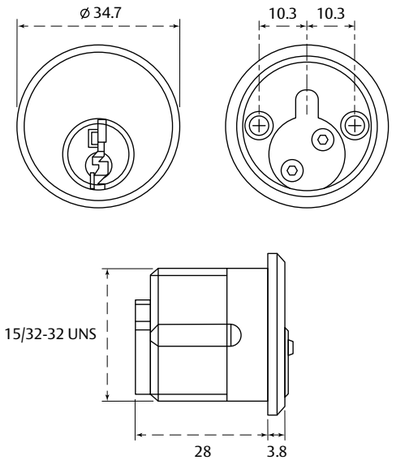

Features and benefits

- Cylinder screws into lockcase 32 TPI (threads per inch) with cam driver on back
- American style cam provided as standard
- Standard cam suits American style lockcases. Special cams are available for other lockcase makes
- State lock type when ordering to ensure that correct cam is supplied
- P651 round threaded cylinders are also available with micro switch, for use as a momentary action key switch
- Spacer rings available in 3 sizes: 5, 9 & 12mm. Security shroud available in stainless steel
- See Electromechanical locking section for further information

How to order

Product code	Cylinder reference	Description	Finish
105149090	P651	Single mortice cylinder	Add suffix: 13 = SC 20 = B
105150090	P652	Double mortice cylinder	
105163090	P651K	Single key switch cylinder	

Product codes in the table are configured as master keyed.

Round rim cylinder

For use with rim locks and other locking devices accepting rim cylinders.

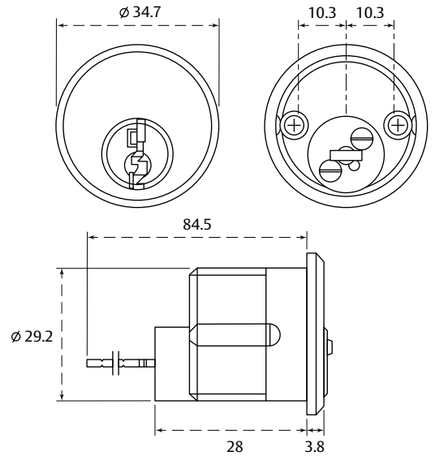

Features and benefits

- Cylinders fixed from outside with tailpiece passing through door into back of surface fixed lock
- Supplied with 50mm tailpiece as standard. 150mm length extended tailpiece available
- Cylinder fixed from inside with 2 screws
- UNC 12-24 screws (6-pin) supplied with cylinder
- Supplied with a 5mm spacer ring and fixing screws
- 35mm cylinder face diameter

How to order

Product code	Cylinder reference	Description	Finish
105151090	P657	Rim cylinder	Add suffix: 13 = SC, 20 = B

Product codes in the table are configured as master keyed.

Euro profile single cylinder

For use with lockcases accepting Euro profile cylinders.

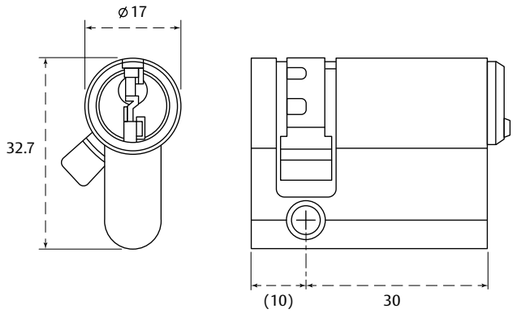

Features and benefits

- Cylinders provided with a multi position cam as standard
- Drill protection in the cylinder plug and body
- Lengths starting at +0 (40mm overall) available in 5mm increments up to +40 (80mm overall)
- Extended length cylinders above +40 in size are also available utilising the M20 modular platform
- Cylinders are supplied with a fixing screw as standard

How to order

Product code	Cylinder reference	Description	Finish
105134090	P623 +0	Single Euro (40mm)	Add suffix: 13 = SC 20 = B
105135090	P623 +5	Single Euro (45mm)	
105136090	P623 +10	Single Euro (50mm)	

Product codes in the table are configured as master keyed.
Other cylinder sizes available on request.

Euro profile double cylinder

For use with lockcases accepting Euro profile cylinders.

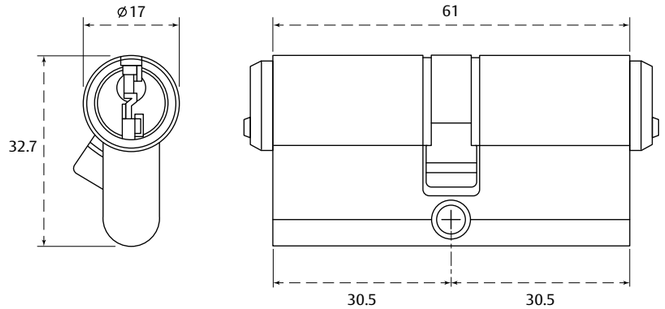

Features and benefits

- Cylinders provided with DIN 18252 cam
- Drill protection in cylinder plug and body
- Lengths starting at +0+0 (61mm) available in 5mm increments up to +40+40 (140mm)
- Offset lengths also available (any size up to +40 / 70mm per side)
- Extended length cylinders above +40 in size are also available utilising the M20 modular platform
- Cylinders are supplied with a fixing screw as standard

How to order

Product code	Cylinder reference	Description	Finish
105137090	P622 +0+0	Double Euro (61mm)	Add suffix: 13 = SC 20 = B
105138090	P622 +5+5	Double Euro (70mm)	
105139090	P622 +10+10	Double Euro (80mm)	

Product codes in the table are configured as master keyed.
Other cylinder sizes available on request.

Euro profile key and turn cylinder

For use with lockcases accepting Euro profile cylinders.

P627

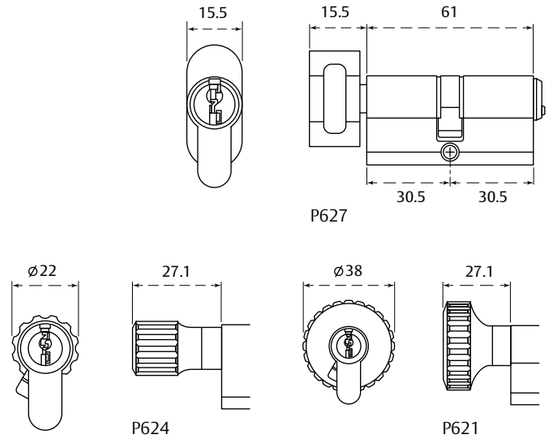

Features and benefits

- Cylinders provided with DIN 18252 cam
- Drill protection in cylinder plug and body
- Lengths starting at +0+0 (61mm) available in 5mm increments up to +40+40 (140mm)
- Offset lengths also available (any size up to +40 / 70mm per side)
- Extended length cylinders above +40 in size are also available utilising the M20 modular platform
- 3 thumbturn designs available to choose from: oval, small round and large round
- Cylinders are supplied with a fixing screw as standard

How to order

Product code	Cylinder reference	Description	Finish
105146090	P627 +0+0	Key and turn Euro - oval turn (61mm)	Add suffix: 13 = SC 20 = B
105147090	P627 +5+5	Key and turn Euro - oval turn (70mm)	
105148090	P627 +10+10	Key and turn Euro - oval turn (80mm)	
105143090	P624 +0+0	Key and turn Euro – small turn (61mm)	Add suffix: 13 = SC 20 = B
105144090	P624 +5+5	Key and turn Euro - small turn (70mm)	
105145090	P624 +10+10	Key and turn Euro - small turn (80mm)	
105140090	P621 +0+0	Key and turn Euro – large turn (61mm)	Add suffix: 13 = SC 20 = B
105141090	P621 +5+5	Key and turn Euro - large turn (70mm)	
105142090	P621 +10+10	Key and turn Euro - large turn (80mm)	

Additional options:

A1 – classroom clockwise, **B1** – classroom anticlockwise, **C1** – clutch release.

Please note: Handing of classroom function must be specified when placing order.

Product codes in the table are configured as master keyed. Other cylinder sizes available on request.

Oval profile single cylinder

For use with lockcases accepting oval profile cylinders.

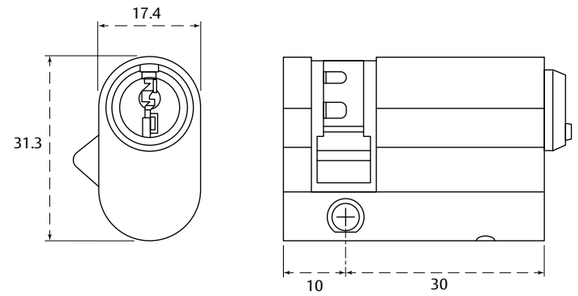

Features and benefits

- Cylinders provided with a multi position cam as standard
- Drill protection in cylinder plug and body
- Lengths starting at +0 (40mm) available in 5mm increments up to +10 only (50mm)
- Extended length cylinders above +10 are not available with the M20 modular platform
- Cylinders are supplied with a fixing screw as standard

How to order

Product code	Cylinder reference	Description	Finish
105119090	P633 +0	Single oval (40mm)	Add suffix: 13 = SC 20 = B
105120090	P633 +5	Single oval (45mm)	
105121090	P633 +10	Single oval (50mm)	

Product codes in the table are configured as master keyed.
Other cylinder sizes available on request.

Oval profile double cylinder

For use with lockcases accepting oval profile cylinders.

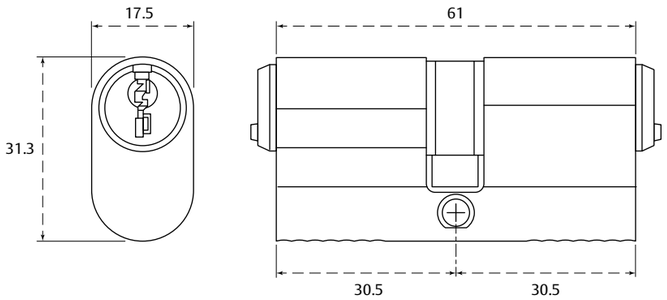

Features and benefits

- Drill protection in cylinder plug and body
- Lengths starting at +0+0 (61mm) available in 5mm increments up to +10+10 only (80mm)
- Offset lengths also available (any size up to +10 / 40mm per side)
- Extended length cylinders above +10 are not available with the M20 modular platform
- Cylinders are supplied with a fixing screw as standard

How to order

Product code	Cylinder reference	Description	Finish
105122090	P632 +0	Double oval (61mm)	Add suffix: 13 = SC 20 = B
105123090	P632 +5	Double oval (70mm)	
105124090	P632 +10	Double oval (80mm)	

Additional options:

DA1 – dual action functionality

Product codes in the table are configured as master keyed.

Oval profile key and turn cylinder

For use with lockcases accepting oval profile cylinders.

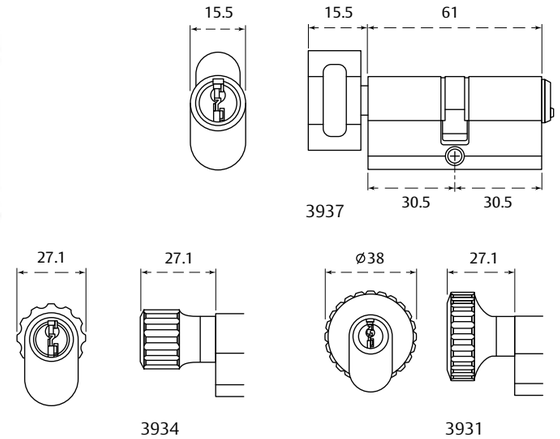

Features and benefits

- Drill protection in cylinder plug and body
- Lengths starting at +0+0 (61mm) available in 5mm increments up to +10+10 only (80mm)
- Offset lengths also available (any size up to +10 / 40mm per side)
- Extended length cylinders above +10 are not available with the M20 modular platform
- 3 thumb turn designs available to choose from: oval, small round and large round
- Cylinders are supplied with a fixing screw as standard

How to order

Product code	Cylinder reference	Description	Finish
105131090	P637 +0+0	Key and turn oval - oval turn (61mm)	Add suffix: 13 = SC 20 = B
105132090	P637 +5+5	Key and turn oval - oval turn (70mm)	
105133090	P637 +10+10	Key and turn oval - oval turn (80mm)	
105128090	P634 +0+0	Key and turn oval – small turn (61mm)	Add suffix: 13 = SC 20 = B
105129090	P634 +5+5	Key and turn oval - small turn (70mm)	
105130090	P634 +10+10	Key and turn oval - small turn (80mm)	
105125090	P631 +0+0	Key and turn oval – large turn (61mm)	Add suffix: 13 = SC 20 = B
105126090	P631 +5+5	Key and turn oval - large turn (70mm)	
105127090	P631 +10+10	Key and turn oval - large turn (80mm)	

Additional options:

A1 – classroom clockwise, **B1** – classroom anticlockwise, **C1** – clutch release.

Please note: Handing of classroom function must be specified when placing order.

Product codes in the table are configured as master keyed.

Cam locks

For use on cabinet doors or similar applications.

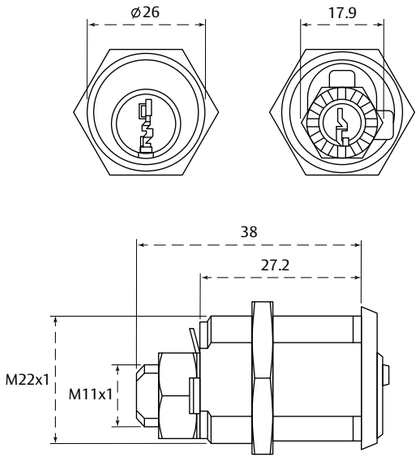

Features and benefits

- Easily adjustable for door thicknesses up to 23mm
- Catches should be specified separately
- Standard catch reference 05 is shown; please contact us for details on alternatives and availability

How to order

Product code	Cylinder reference	Description	Finish
10565209011	P671	Cam lock	BC

Product codes in the table are configured as master keyed.

High security class 2 padlock

Solid brass padlock range with hardened steel shackle in a range of variants for medium security internal and external applications.

P2641 P2643 P2646 P2649

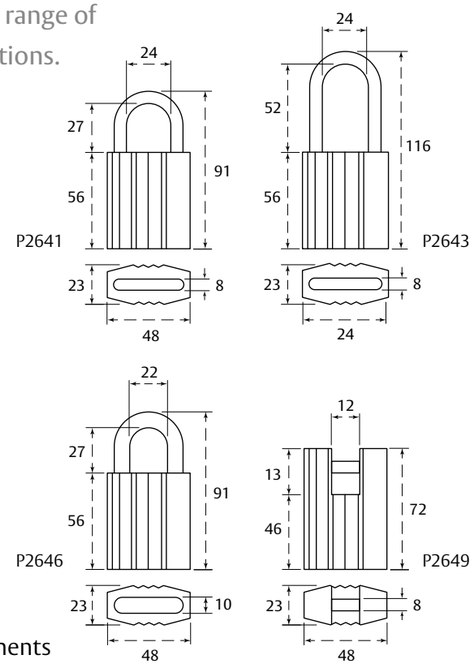

Features and benefits

- Green stripes indicate the product exceeds security requirements of Grade 3 certification in accordance with EN 12320:2012
- Padlock body manufactured from extruded brass and surface black chrome plated
- Rustproof hardened steel shackle available in 8mm or 10mm diameters
- Drainage holes in the padlock body to prevent freezing
- No external screws or rivets for opportune attack
- Tensile resistance / strength over 1.5 tons
- A range of padlock functions available including snap locking, key retaining and closed shackle variants
- Standard shackle clearance 27mm
- 52mm clearance on extended shackle variant
- A protective dust cover is available for use with this padlock

How to order

Product code	Cylinder reference	Description	Finish
10515409018	P2640	Key locking	MB
10515509018	P2641	Snap locking	MB
10515609018	P2643	Key locking extended shackle	MB
10515709018	P2646	Key locking 10mm diameter shackle	MB
10515809018	P2649	Key locking closed shackle	MB

Product codes in the table are configured as master keyed.

High security class 3 padlock

Steel padlock range with hardened steel shackle available as open and closed variants, designed for high security external applications.

P3641

P3649

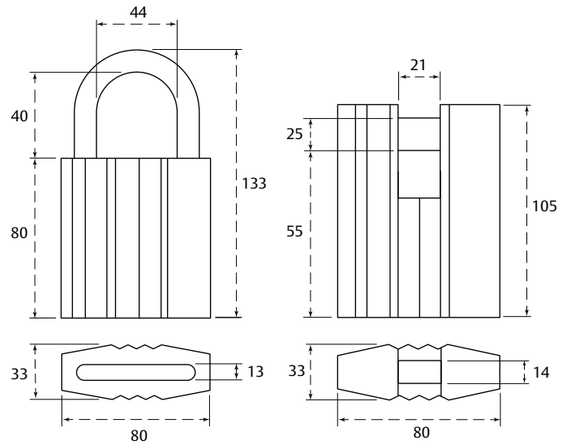

Features and benefits

- Blue stripes indicate the product exceeds security requirements of Grade 4 certification in accordance with EN 12320:2012
- Padlock body manufactured from hardened steel and surface black chrome plated
- Rustproof hardened steel shackle with 10mm diameter
- No external screws or rivets for opportune attack
- Available as opened and closed shackle variants
- Drainage holes in the padlock body prevent freezing
- Tensile resistance / strength of over 4.5 tons
- Shackle clearance of 31mm on open shackle variant, with 18mm clearance on closed shackle variant
- Closed shackle variant utilises sliding bolt design
- A protective dust cover is available for use with this padlock

How to order

Product code	Cylinder reference	Description	Finish
10515909018	P3641	Key locking	MB
10516009018	P3649	Key locking closed shackle	MB

Product codes in the table are configured as master keyed.

High security class 4 and 5 padlock

Steel padlock range with hardened steel shackle available as open and closed shackle variants, designed for extremely high security applications where isolation and abuse may be apparent.

P4641

P5649

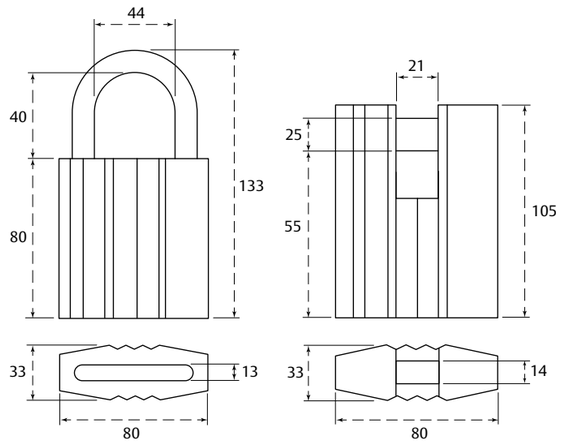

Features and benefits

- Red stripes indicate the product exceeds security requirements Grade 5 (open shackle) or Grade 6 (closed shackle) certification in accordance with EN 12320:2012
- Padlock body manufactured from hardened steel and surface black chrome plated
- Rustproof hardened steel shackle with 13mm diameter
- Drainage holes in the padlock body to prevent freezing
- No external screws or rivets
- Tensile resistance / strength over 10 tons
- Shackle clearance of 40mm on open shackle variant , with 25mm clearance on closed shackle variant
- Closed shackle variant utilises sliding bolt design
- A protective dust cover is available for use in conjunction with this padlock

How to order

Product code	Cylinder reference	Description	Finish
10516109018	P4641	Key locking	MB
10516209018	P5649	Key locking closed shackle	MB

Product codes in the table are configured as master keyed.

WP weather resistant padlock

Specifically designed for applications where a higher level of corrosion resistance is required or where there are excessive levels of pollution, dirt or moisture to ensure the longevity of your keying system.

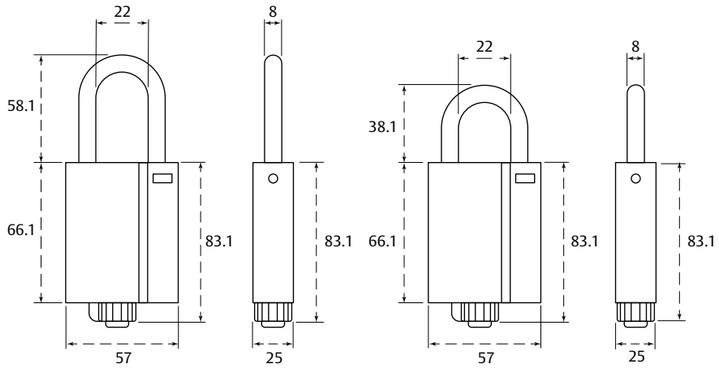

Features and benefits

- Exceeds the security requirements of Grade 3 certification in accordance with EN 12320:2012
- IP68 rated - dust-tight and can withstand continuous immersion in water
- Specially designed 'o rings' are utilised around the shackle and insert cylinder to encapsulate the core, with the securing cap over the keyway to prevent moisture or dust entering from the base of the padlock
- Ideal for harsh environments such as transport and coastal applications
- Padlock body manufactured from steel
- Shackle manufactured from boron steel
- Available with alternative shackle heights, 25mm and 50mm variants
- Operating temperatures: -40° F to +130° F and -40° C to +80° C

How to order

Product code	Cylinder reference	Description	Finish
10565009011	P2625	WP weather resistant 25mm shackle	BC
10565109011	P2650	WP weather resistant 50mm shackle	BC

Product codes in the table are configured as master keyed.

Triton² 3900

With superior patent protection up to 2036 and tested to the highest demands of EN 1303:2015, the Triton² 3900 cylinder system is built to last in the harshest of environments. Its durable nickel silver pin technology ensures consistent smooth operation and years of reliable use in the toughest of applications.

The system utilises four unique patented features which guard the key, cylinder, system pin combination and side blocking element. This provides complete cover and protection from illegal key duplication which ensures security is never compromised.

The distinctive 6 pin double tipped keying system utilises a 12 coded key cut for exceptional master keying capability suited for large scale project applications such as universities and healthcare applications.

A bespoke 2 pin spring loaded side blocking element and undercut key profile protects against 3D key copying processes. Ultimately providing multiple levels of defence against known forms of attack and key duplication.

Range benefits

- Four unique patents protects all elements of the keying system to ensure superior long-life patent protection up to 2036
- Prevents illegal duplication of keys, key blanks and cylinder systems
- Meets the requirements of: EN 1303:2015 grade 6/D and SSF 3522, Class 3 and 5
- Protection from 3D key copying processes with the integrated undercut profile on the keyway
- Innovative double tipped pins with enhanced anti-pick and anti-bump protection for increased security and resistance when in use
- 3.4 million keying combinations for large master keying requirements
- Ideal for large scale master keying requirements for universities and healthcare applications

Platform specification

Patent protection	2036
No. of pins	6 pins with 2 pin blocking side bar element
System type	Serrated / sawn key
Keying options	Master keyed, to pass or differ
Number of keys per cylinder	Master keyed supplied without keys. Standard differ supplied with 2 keys.
Key thickness / material	3mm / Nickel silver
Extended key neck	No
Paracentric key profile	Yes
System pin material	Nickel silver
Key combinations	3.4 million
Durability	500,000 cycles (accelerated test)
Drill protection	5 minutes drilling resistance
Plug pull protection	15kN pulling resistance
Anti-pick features	Yes
Anti-bump features	Yes
Corrosion resistance	240 hours
Accessories	See cylinder accessory section for range of escutcheons, accessory kits, extension pieces and protective covers

Step/protection level

You have two protection levels you can choose from as below:

Step 3: In-house registration – key blanks are available for sale to recognised end users, such as hotels, colleges, and ships. Cutting is then directly under the control of the customer.

Step 4: Stockist registration – keys are available from authorised ASSA ABLOY Vantage Partners. A registration procedure is agreed between the customer and a specific stockist, setting out the procedure for obtaining extra keys.

Classification code

1	6	0	B	0	C	6	D*
(1)	(6)	(0)	(0/A/B)	(0)	(0/A/B/C)	(1-6)	(0/A/B/C/D)

EN 1303:2015

* When used in conjunction with high security escutcheon

10 YEAR GUARANTEE

EPD®

Certification

Certified in compliance with	EN 1303, EN 1634-1
Fire tested	Timber FD30/FD60, metal FD120
Kitemark accreditation	N/A
Guarantee	10 years

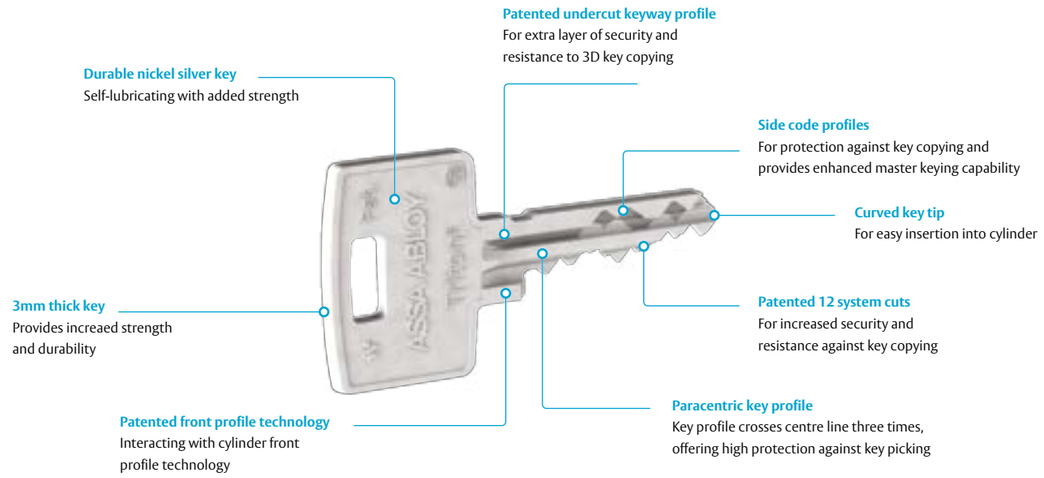

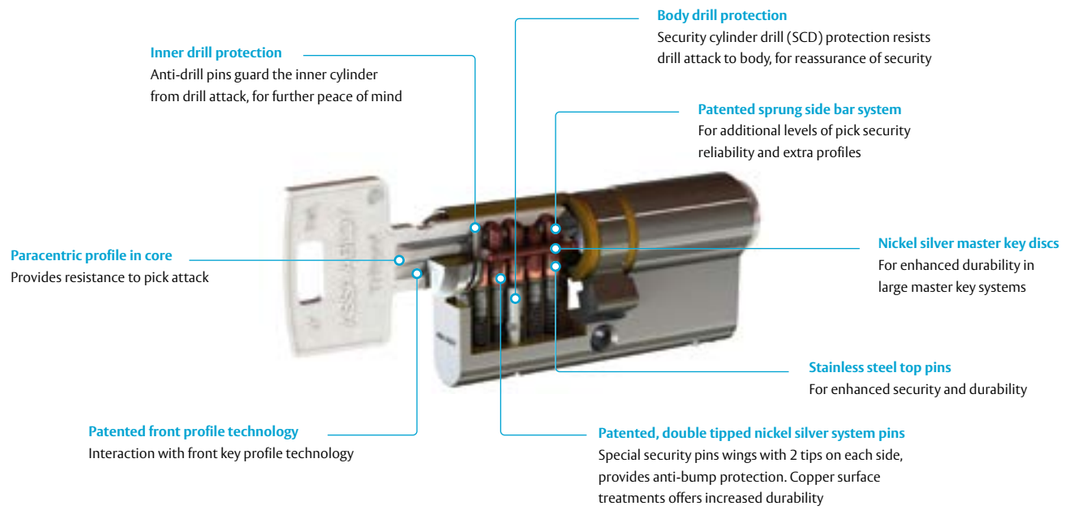

How to order (this platform)

Please use the product code breakdown table below to help identify product range part codes.

105490 | 090 | 13

Unique Cylinder Reference
A unique six-digit prefix code is given to each cylinder to identify it within the ASSA ABLOY platforms

Keying Code
090 = Master keyed
099 = To pass
400 = Standard differ (Step 4)
300 = Standard differ (Step 3)

Finish
(product finished are denoted by the last two digits of the product code)
13 = Satin Chrome
20 = Polished Brass
11 = Bright Chrome
18 = Matte Black

For master key enquiries: +44 (0)1902 364189 or **master.key@assaabloy.com**

Contact our master key team for ordering enquiries on ASSA master key systems.

Triton² 3900 keys

For use with all Triton² 3900 cylinders and padlocks.

Features and benefits

- A precision engineered 3mm thick solid nickel silver key ensuring strength and longevity of use
- Protected by patents ensuring key blanks cannot be manufactured by unauthorised parties
- 12 specialised cuts working in conjunction with the 6 pin cylinder system
- Pre-machined side code for an additional blocking element on key systems
- Patented undercut keyway profile to prevent 3D key copying

How to order

Product code	Description	Finish	Cylinder keying
10545309013	3900 cut key supplied with cylinder	NS	Master keyed or differ
10545409013	3900 cut key supplied later	NS	Master keyed or differ

Product codes in the table are configured as master keyed.

Scandinavian oval cylinder

For use with modular and narrow profile lockcases.

3901

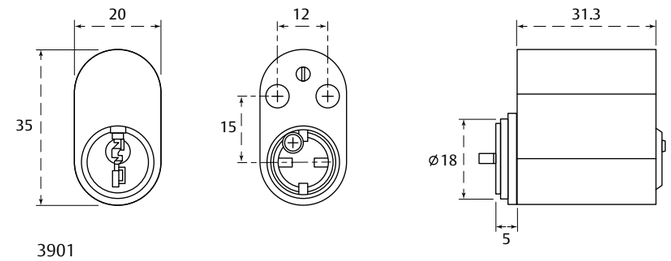

3901

3903

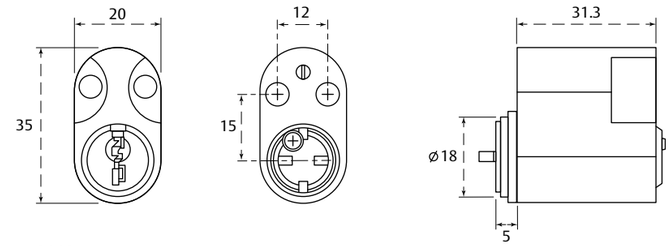

3903

Features and benefits

- The cylinder is secured through the center of the lockcase with two hardened steel screws for increased security
- Fixing screws supplied with accessory sets including 256 accessory and 18256 accessory
- Extension pieces are available in four sizes to suit thicker doors: 8, 10, 12.5 and 18mm

How to order

Product code	Cylinder reference	Description	Finish
105455090	3901	Single cylinder (outside)	Add suffix: 13 = SC 20 = B
105457090	3903	Single cylinder (inside)	
105456090	3902	Double cylinder	

Product codes in the table are configured as master keyed.

Scandinavian rim cylinder

For use with rim and narrow profile lockcases.

3907

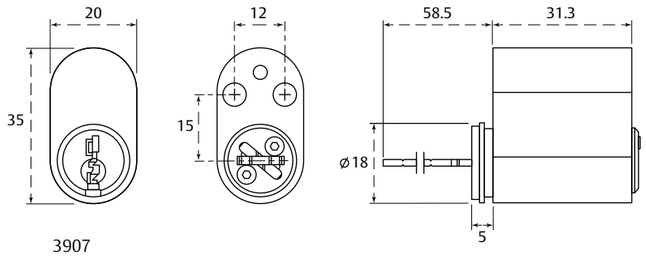

3907

3909

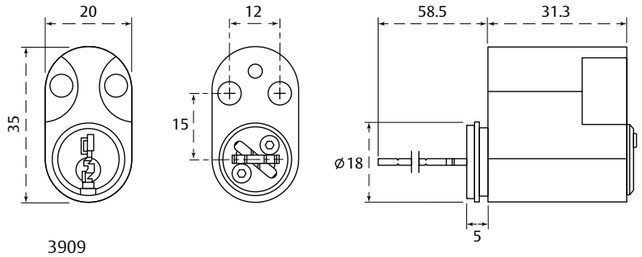

3909

Features and benefits

- The cylinder is fixed to the lockcase with two brass screws which can be cut to length
- Supplied with 50mm tail piece as standard. 150mm length extended tail piece available
- Distance rings available in sizes, 5, 10, 15, 20, 25, 30 and 37mm
- Sleeve is not required when used with narrow profile accessories
- When using the S4 narrow profile double accessories (only), specify two 3907 single outside cylinders rather than a double cylinder

How to order

Product code	Cylinder reference	Description	Finish
105458090	3907	Single rim cylinder (outside)	Add suffix: 13 = SC 20 = B
105635090	3909	Single rim cylinder (inside)	
105636090	3908	Double rim cylinder	

Product codes in the table are configured as master keyed.

Scandinavian round cylinder

For use with modular lockcases.

3911

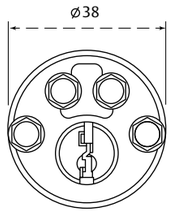

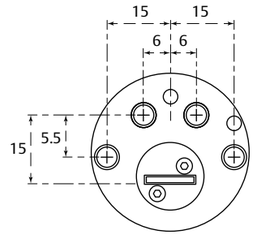

3911

3913

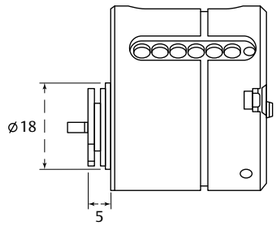

Features and benefits

- The ultimate level of physical security is assured when using this cylinder
- Enhanced drill protection on the external side and secured through the lockcase with four high security hardened steel screws (supplied with the accessory set) boasting extreme strength and resistance to a snap or twist attack
- An anti-tamper plate ensures that only key holders are able to remove this cylinder from the door once installed

How to order

Product code	Cylinder reference	Description	Finish
105459090	3911	Single cylinder (outside)	Add suffix: 13 = SC 20 = B
105461090	3913	Single cylinder (inside)	
105460090	3912	Double rim cylinder	

Product codes in the table are configured as master keyed.

Round mortice cylinder

For use with American style locking devices accepting screw-in / ANSI cylinders.

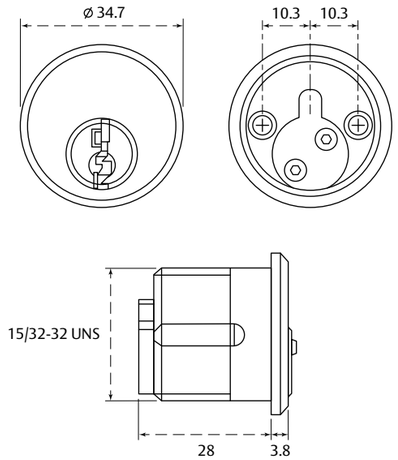

Features and benefits

- Cylinder screws into lockcase 32 TPI (threads per inch) with cam driver on back
- American style cam provided as standard
- Standard cam suits American style lockcase. Special cams are available for other lockcase makes (state lock type when ordering to ensure that correct cam is supplied)
- 3951 round threaded cylinders are also available with micro switch, for use as a momentary action key switch
- Spacer rings available in 3 sizes: 5, 9 and 12mm. Security shroud available (stainless steel)
- See Electromechanical locking section for further information

How to order

Product code	Cylinder reference	Description	Finish
105492090	3951	Single mortice cylinder	Add suffix: 13 = SC 20 = B
105493090	3952	Double mortice cylinder	
105495090	3951K	Single key switch cylinder	

Product codes in the table are configured as master keyed.

Round rim cylinder

For use with rim locks and other locking devices accepting rim cylinders.

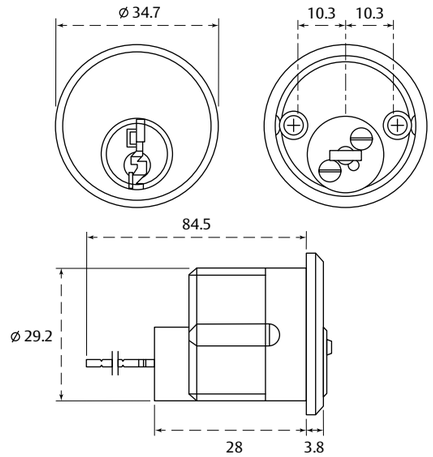

Features and benefits

- Cylinders fixed from outside with tailpiece passing through door into back of surface fixed lock
- Supplied with 50mm tail piece as standard. 150mm length extended tailpiece available
- Cylinder fixed from inside with 2 screws
- UNC 12-24 screws (6-pin) supplied with cylinder
- Supplied with a 5mm spacer ring and fixing screws
- 35mm cylinder face diameter

How to order

Product code	Cylinder reference	Description	Finish
105494090	3957	Rim cylinder	Add suffix 13 = SC, 20 = B

Product codes in the table are configured as master keyed.

Euro profile single cylinder

For use with lockcases accepting Euro profile cylinders.

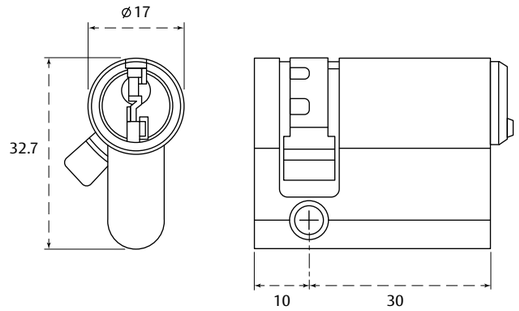

Features and benefits

- Cylinders provided with a multi position cam as standard
- Drill protection in cylinder plug and body
- Lengths starting at +0 (40mm overall) available in 5mm increments up to +40 (80mm overall)
- Extended length cylinders above +40 in size are also available utilising the M20 modular platform
- Cylinders are supplied with a fixing screw as standard

How to order

Product code	Cylinder reference	Description	Finish
105477090	3923 +0	Single Euro (40mm)	Add suffix: 13 = SC 20 = B
105478090	3923 +5	Single Euro (45mm)	
105479090	3923 +10	Single Euro (50mm)	

Product codes in the table are configured as master keyed
Other cylinder sizes available on request

Euro profile double cylinders

For use with lockcases accepting Euro profile cylinders.

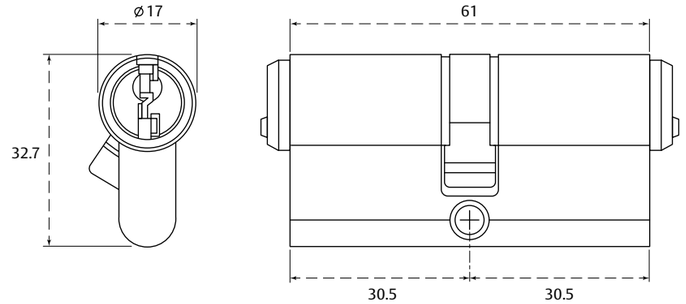

Features and benefits

- Cylinders provided with DIN 18252 cam
- Drill protection in cylinder plug and body
- Lengths starting at +0+0 (61mm) available in 5mm increments up to +40+40 (140mm)
- Offset lengths also available (any size up to +40 / 70mm per side)
- Extended length cylinders above +40 in size are also available utilising the M20 modular platform
- Cylinders are supplied with a fixing screw as standard

How to order

Product code	Cylinder reference	Description	Finish
105480090	3922 +0+0	Double Euro (61mm)	Add suffix: 13 = SC 20 = B
105481090	3922 +5+5	Double Euro (70mm)	
105482090	3922 +10+10	Double Euro (80mm)	

Additional options:

DA1 – dual action functionality available.

Product codes in the table are configured as master keyed. Other cylinder sizes available on request.

Euro profile key and turn cylinders

For use with lockcases accepting Euro profile cylinders.

3927

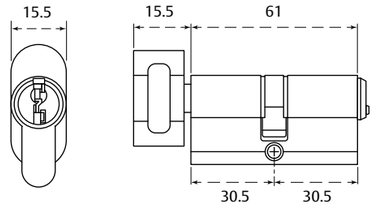

3927

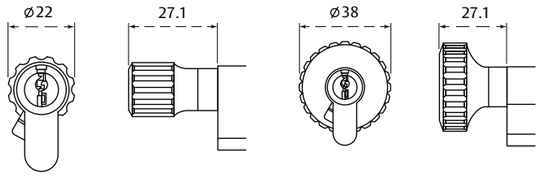

3924 3921

Features and benefits

- Cylinders provided with DIN 18252 cam
- Drill protection in cylinder plug and body
- Lengths starting at +0+0 (61mm) available in 5mm increments up to +40+40 (140mm)
- Offset lengths also available (any size up to +40 / 70mm per side)
- Extended length cylinders above +40 in size are also available utilising the M20 modular platform
- 3 thumbturn designs available to choose from: oval, small round and large round
- Cylinders are supplied with a fixing screw as standard

How to order

Product code	Cylinder reference	Description	Finish
105489090	3927 +0+0	Key and turn Euro – oval turn (61mm)	Add suffix: 13 = SC 20 = B
105490090	3927 +5+5	Key and turn Euro – oval turn (70mm)	
105491090	3927 +10+10	Key and turn Euro – oval turn (80mm)	
105486090	3924 +0+0	Key and turn Euro – small turn (61mm)	Add suffix: 13 = SC 20 = B
105487090	3924 +5+5	Key and turn Euro – small turn (70mm)	
105488090	3924 +10+10	Key and turn Euro – small turn (80mm)	
105483090	3921 +0+0	Key and turn Euro – large turn (61mm)	Add suffix: 13 = SC 20 = B
105484090	3921 +5+5	Key and turn Euro – large turn (70mm)	
105485090	3921 +10+10	Key and turn Euro – large turn (80mm)	

Additional options:
A1 – classroom clockwise, **B1** – classroom anticlockwise, **C1** – clutch release.
Please note: Handing of classroom function must be specified when placing order.
Product codes in the table are configured as master keyed. Other cylinder sizes available on request.

Oval profile single cylinder

For use with lockcases accepting oval profile cylinders.

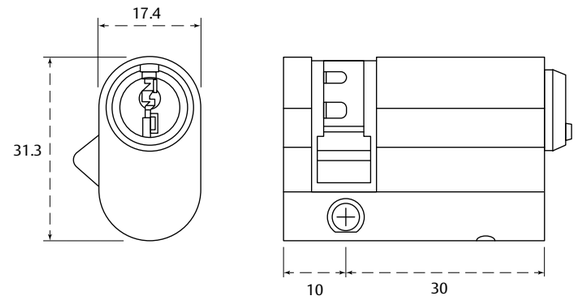

Features and benefits

- Cylinders provided with a multi position cam as standard
- Drill protection in cylinder plug and body
- Lengths starting at +0 (40mm overall) available in 5mm increments up to +10 only (50mm overall)
- Extended length cylinders above +10 are not available with the M20 modular platform
- Cylinders are supplied with a fixing screw as standard

How to order

Product code	Cylinder reference	Description	Finish
105462090	3933 +0	Single oval (40mm)	Add suffix: 13 = SC 20 = B
105463090	3933 +5	Single oval (45mm)	
105464090	3933 +10	Single oval (50mm)	

Product codes in the table are configured as master keyed.

Oval profile double cylinder

For use with lockcases accepting oval profile cylinders.

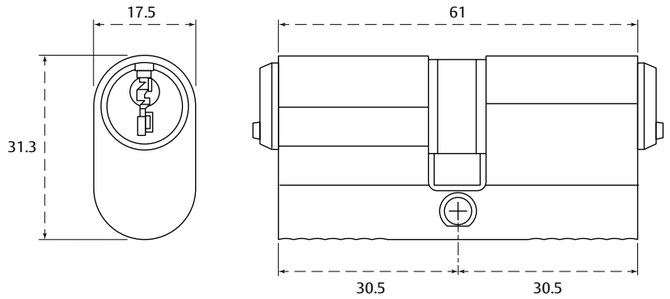

Features and benefits

- Drill protection in cylinder plug and body
- Lengths starting at +0+0 (61mm) available in 5mm increments up to +10+10 only (80mm)
- Offset lengths also available (any size up to +10 / 40mm per side)
- Extended length cylinders above +10 are not available with the M20 modular platform
- Cylinders are supplied with a fixing screw as standard

How to order

Product code	Cylinder reference	Description	Finish
105465090	3932 +0+0	Double oval (61mm)	Add suffix: 13 = SC 20 = B
105466090	3932 +5+5	Double oval (70mm)	
105467090	3932 +10+10	Double oval (80mm)	

Additional options:

DA1 – dual action functionality available.

Product codes in the table are configured as master keyed.

Oval profile key and turn cylinder

For use with lockcases accepting oval profile cylinders.

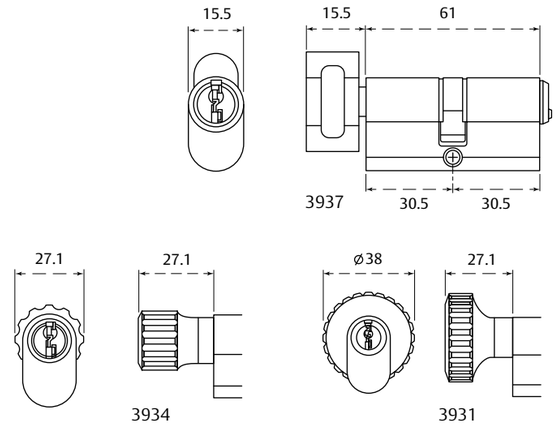

Features and benefits

- Drill protection in cylinder plug and body
- Lengths starting at +0+0 (61mm) available in 5mm increments up to +10+10 only (80mm)
- Offset lengths also available (any size up to +10 / 40mm per side)
- Extended length cylinders above +10 are not available with the M20 modular platform
- 3 thumbturn designs available to choose from: oval, small round and large round
- Cylinders are supplied with a fixing screw as standard

How to order

Product code	Cylinder reference	Description	Finish
105474090	3937 +0+0	Key and turn oval – oval turn (61mm)	Add suffix: 13 = SC 20 = B
105475090	3937 +5+5	Key and turn oval – oval turn (70mm)	
105476090	3937 +10+10	Key and turn oval – oval turn (80mm)	
105471090	3934 +0+0	Key and turn oval – small turn (61mm)	Add suffix: 13 = SC 20 = B
105472090	3934 +5+5	Key and turn oval – small turn (70mm)	
105473090	3934 +10+10	Key and turn oval – small turn (80mm)	
105468090	3931 +0+0	Key and turn oval – large turn (61mm)	Add suffix: 13 = SC 20 = B
105469090	3931 +5+5	Key and turn oval – large turn (70mm)	
105470090	3931 +10+10	Key and turn oval – large turn (80mm)	

Additional options:

A1 – classroom clockwise, **B1** – classroom anticlockwise, **C1** – clutch release.

Please note: Handing of classroom function must be specified when placing order.

Product codes in the table are configured as master keyed.

Cam locks

For use on cabinet doors and similar applications.

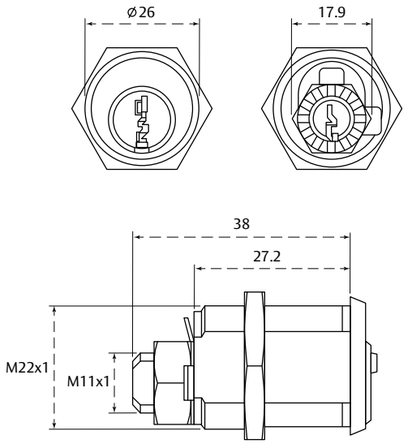

Features and benefits

- Easily adjustable for door thicknesses up to 23mm
- Catches should be specified separately
- Standard catch reference 05 is shown; please contact us for details on alternatives and availability

How to order

Product code	Padlock reference	Description	Finish
10565309011	3970	Cam lock	BC

Product codes in the table are configured as master keyed.

High security class 2 padlock

Solid brass padlock range with hardened steel shackle in a range of variants for medium security internal and external applications.

23941 23943 23946 23949

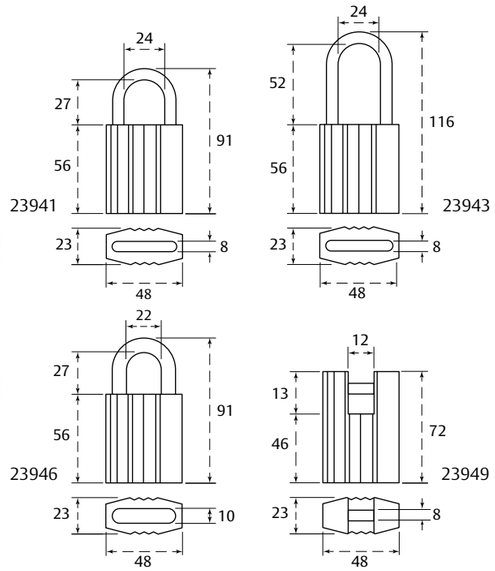

Features and benefits

- Green stripes indicate the product exceeds security requirements of Grade 3 certification in accordance with EN 12320:2012
- Padlock body manufactured from extruded brass and surface black chrome plated
- Rustproof hardened steel shackle available in 8mm or 10mm diameters
- Drainage holes in the padlock body to prevent freezing
- No external screws or rivets for opportune attack
- Tensile resistance/strength over 1.5 tons
- A range of padlock functions available including snap locking, key retaining and closed shackle variants
- Standard shackle clearance 27mm, with 52mm clearance on extended shackle variant
- A protective dust cover available for use in conjunction with this padlock

How to order

Product code	Padlock reference	Description	Finish
10550509018	23941	Snap locking	MB
10550609018	23943	Key locking extended shackle	MB
10550709018	23946	Key locking 10mm diameter shackle	MB
10550809018	23949	Key locking closed shackle	MB

Product codes in the table are configured as master keyed.

High security class 3 padlock

Steel padlock range with hardened steel shackle available as open and closed variants, designed for high security external applications.

35941

35949

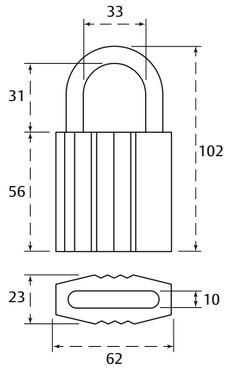

35941

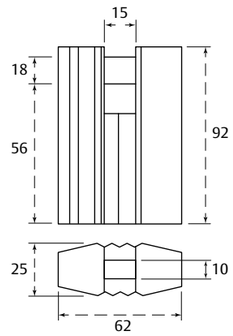

35949

Features and benefits

- Blue stripes indicate the product exceeds security requirements of Grade 4 certification in accordance with EN 12320:2012
- Padlock body manufactured from hardened steel and surface black chrome plated
- Rustproof hardened steel shackle with 10mm diameter
- No external screws or rivets for opportune attack
- Available as opened and closed shackle variants
- Drainage holes in the padlock body prevent freezing
- Tensile resistance / strength of over 4.5 tons
- Shackle clearance of 31mm on open shackle variant and 18mm on closed shackle variant
- Closed shackle variant utilises sliding bolt design
- A protective dust cover is available for use in conjunction with this padlock

How to order

Product code	Padlock reference	Description	Finish
10550909018	33941	Key locking	MB
10551009018	33949	Key locking closed shackle	MB

Product codes in the table are configured as master keyed.

Class 4 and 5 padlocks

Steel padlock range with hardened steel shackle available as an open and closed shackle variants, designed for extremely high security applications where isolation and abuse may be apparent.

43941

53949

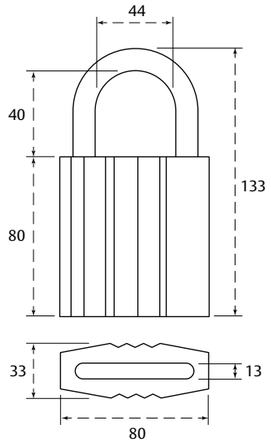

43941

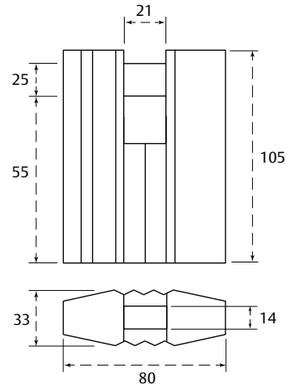

53949

Features and benefits

- Red stripes indicates the product exceeds security requirements Grade 5 (open shackle) or Grade 6 (closed shackle) certification in accordance with EN 12320:2012
- Padlock body manufactured from hardened steel and surface black chrome plated
- Rustproof hardened steel shackle with 13mm diameter
- Drainage holes in the padlock body to prevent freezing
- No external screws or rivets
- Tensile resistance/strength over 10 tons
- Shackle clearance of 40mm on open shackle variant and 25mm on closed shackle variant
- Closed shackle variant utilises sliding bolt design
- A protective dust cover is available for use in conjunction with this padlock

How to order

Product code	Padlock reference	Description	Finish
10558509018	43941	Key locking	MB
10551109018	53949	Key locking closed shackle	MB

Product codes in the table are configured as master keyed.

WP weather resistant padlocks

Specifically designed for applications where a higher level of corrosion resistance is required or where there are excessive levels of pollution, dirt or moisture to ensure the longevity of your keying system.

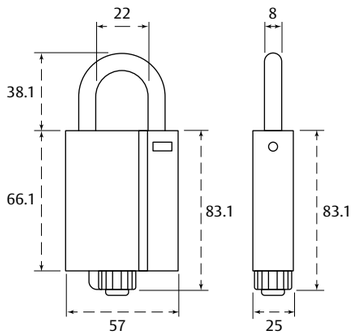

23925

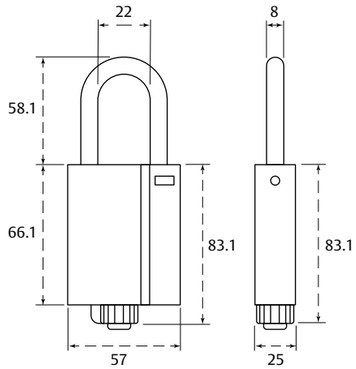

23950

Features and benefits

- Exceeds the security requirements of Grade 3 certification in accordance with EN 12320:2012
- IP68 rated - dust-tight and can withstand continuous immersion in water
- Specially designed 'o rings' are utilised around the shackle and insert cylinder to encapsulate the core, with securing cap over the keyway to prevent moisture or dust entering from the base of the padlock
- Ideal for harsh environments such as transport and coastal applications
- Padlock body manufactured from steel
- Shackle manufactured from boron steel
- Available with alternative shackle heights, 25mm and 50mm variants
- Operating temperatures: -40° F to +130° F and -40° C to +80° C

How to order

Product code	Padlock reference	Description	Finish
10565409011	23925	WP weather resistant 25mm shackle	BC
10560909011	23950	WP weather resistant 50mm shackle	BC

Product codes in the table are configured as master keyed.

Triton² 5900

With superior patent protection up to 2036 and tested to the highest demands of EN 1303:2015, the Triton² 5900 cylinder system provides exceptional product performance along with unparalleled protection and security for buildings and its users.

The system utilises four unique patented features which guard the key, cylinder, system pin combination and side blocking element. This provides complete cover and protection from illegal key duplication which ensures security is never compromised.

The distinctive 6 pin double tipped keying system utilises a 12 coded key cut along with a bespoke 4 pin spring loaded side coding element. Configured specifically to each system which combined offers an unrivalled 1.5 billion combinations, ensuring every master key system produced is unique, making it perfect for extremely large scale project applications or where security is of the upmost priority.

The bespoke 4 pin spring loaded side coding element also acts as an additional blocking element and the undercut key profile protects against 3D key copying processes. Ultimately providing multiple levels of defence against known forms of attack and key duplication.

Range benefits

- Four unique patents protects all elements of the keying system to ensure superior long-life patent protection up to 2036
- Meets the requirements of: EN 1303:2015 grade 6/D and SSF 3522, Class 3 and 5
- Protection from 3D key copying processes with the integrated undercut profile on the keyway
- Innovative double tipped pins with enhanced anti-pick and anti-bump protection for increased security and resistance when in use
- 1.5 billion keying combinations for extremely large master keying requirements
- Every master key system is guaranteed to be unique offering pure exclusivity for its users
- Ideal for extremely large scale master keying requirements or where security is of the upmost priority

Platform specification

Patent protection	2036
No. of pins	6 pins with bespoke 4 pin side pin combination
System type	Serrated / sawn key
Keying options	Master keyed only
Number of keys per cylinder	Master keyed supplied without keys
Key thickness / material	3mm / Nickel silver
Extended key neck	No
Paracentric key profile	Yes
System pin material	Nickel silver
Key combinations	1.5 billion
Durability	500,000 cycles (accelerated test)
Drill protection	5 minutes drilling resistance
Plug pull protection	15kN pulling resistance
Anti-pick features	Yes
Anti-bump features	Yes
Corrosion resistance	240 hours
Accessories	See cylinder accessory section for range of escutcheons, accessory kits, extension pieces and protective covers

Step/protection level

Triton² 5900 comes with the following protection level:

Step 5: Restricted registration
Keys are available from authorised Triton² 5900 dealers. A registration procedure is agreed between the customer and a specific stockist, setting out the procedure for obtaining extra keys.

Classification code

1	6	0	B	0	C	6	D*
(1)	(6)	(0)	(0/A/B)	(0)	(0/A/B/C)	(1-6)	(0/A/B/C/D)

EN 1303:2015

* When used in conjunction with high security escutcheon

10 YEAR GUARANTEE

EPD®

Certification

Certified in compliance with	EN 1303, EN 1634-1
Suitable for fire doors	Timber FD30/FD60, metal FD120
Kitemark accreditation	N/A
Guarantee	10 years

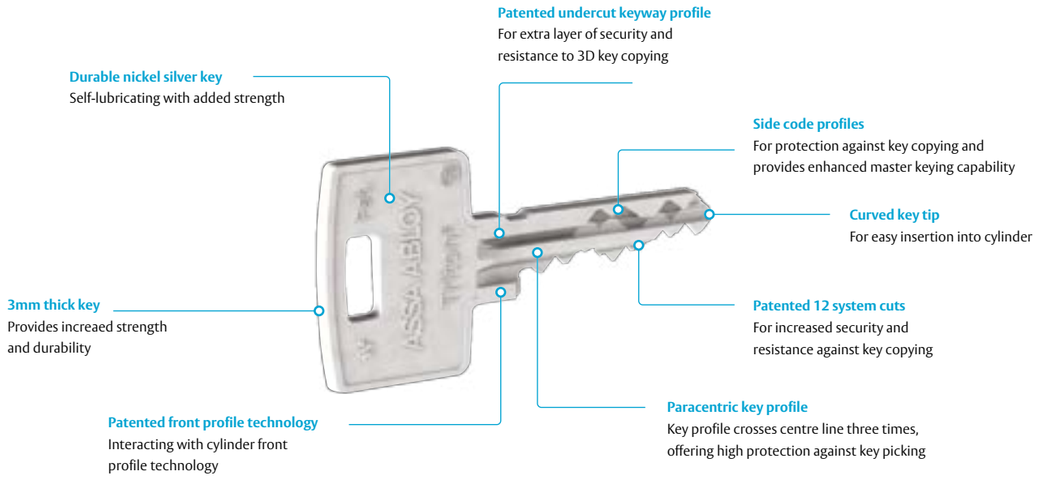

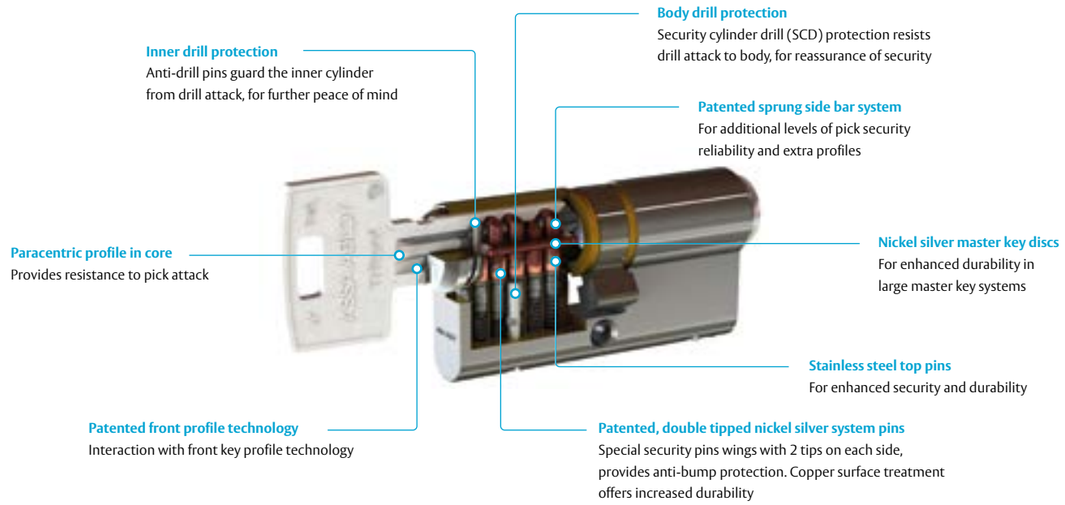

How to order (this platform)

Please use the product code breakdown table below to help identify product range part codes.

105490 | 090 | 13

Unique cylinder reference
A unique six-digit prefix code is given to each cylinder to identify it within the ASSA ABLOY platforms

Keying code
090 = ASSA 5900 cylinders are only available as master keyed

Finish
(product finished are denoted by the last two digits of the product code)
13 = Satin chrome
20 = Polished brass
11 = Bright chrome
18 = Matte black

For master key enquiries: +44 (0)1902 364189 or **master.key@assaabloy.com**

Contact our master key team for ordering enquiries on ASSA master key systems.

Triton² 5900 keys

For use with all Triton² 5900 cylinders and padlocks.

Features and benefits

- A precision engineered 3mm thick solid nickel silver key ensuring strength and longevity of use
- Protected by patents ensuring key blanks cannot be manufactured by unauthorised parties
- 12 specialised cuts working in conjunction with the 6 pin cylinder system
- Specially machined side code profile for pure exclusivity of master key systems
- Patented undercut keyway profile to prevent 3D key copying

How to order

Product code	Description	Finish	Cylinder keying
10552600000	5900 cut key supplied with cylinder	NS	Master keyed only
10552700000	5900 cut key supplied later	NS	Master keyed only

Product codes in the table are configured as master keyed.

Scandinavian oval cylinder

For use with modular and narrow profile lockcases.

5901

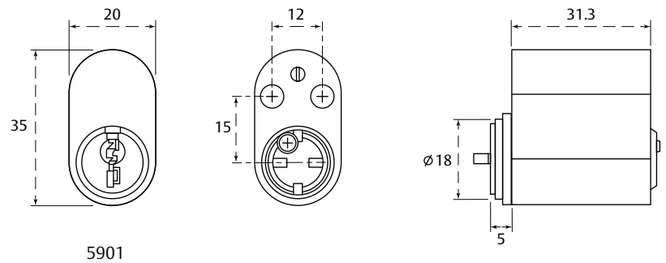

5901

5903

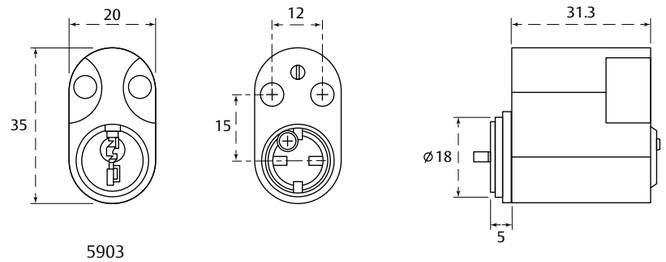

5903

Features and benefits

- The cylinder is secured through the center of the lockcase with two hardened steel screws for increased security
- Fixing screws supplied with accessory sets including 256 accessory and 18256 accessory
- Extension pieces are available in four sizes to suit thicker doors: 8, 10, 12.5 and 18mm

How to order

Product code	Cylinder reference	Description	Finish
105528090	5901	Single cylinder (outside)	Add suffix: 13 = SC 20 = B
105530090	5903	Single cylinder (inside)	
105529090	5902	Double cylinder	

Product codes in the table are configured as master keyed.

Scandinavian rim cylinder

For use with rim and narrow profile lockcases.

5907

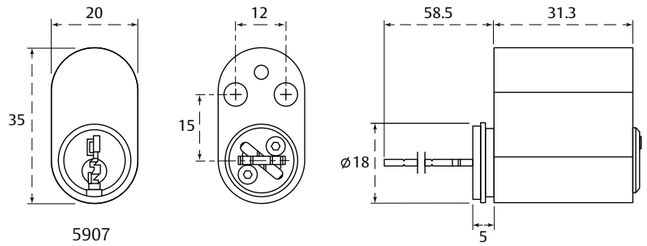

5907

5909

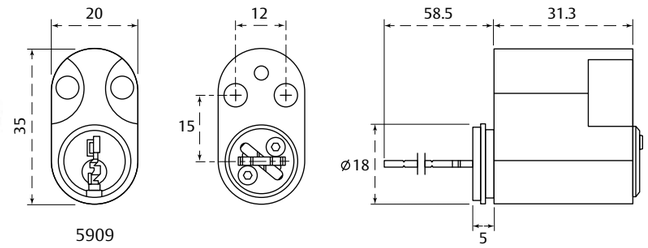

5909

Features and benefits

- The cylinder is fixed to the lockcase with two brass screws which can be cut to length
- Supplied with 50mm tailpiece as standard. 150mm length extended tail piece available
- Distance rings available in sizes: 5, 10, 15, 20, 25, 30 and 37mm
- Sleeve is not required when used with narrow profile accessories
- When using the S4 narrow profile double accessories (only), specify two 5907 single outside cylinders rather than a double cylinder

How to order

Product code	Cylinder reference	Description	Finish
105531090	5907	Single rim cylinder (outside)	Add suffix: 13 = SC 20 = B
105575090	5909	Single rim cylinder (inside)	
105576090	5908	Double rim cylinder	

Product codes in the table are configured as master keyed.

Scandinavian round cylinder

For use with modular lockcases.

5911

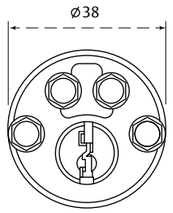

5911

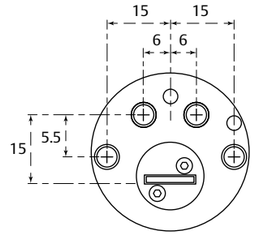

5913

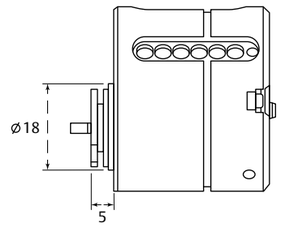

Features and benefits

- The ultimate level of physical security is assured when using this cylinder
- With enhanced drill protection on the external side and secured through the lockcase with four high security hardened steel screws (supplied with the accessory set) boasting extreme strength and resistance to snap/twist attack
- An anti-tamper plate ensures that only key holders are able to remove this cylinder from the door once installed

How to order

Product code	Cylinder reference	Description	Finish
105532090	5911	Single cylinder (outside)	Add suffix: 13 = SC 20 = B
105534090	5913	Single cylinder (inside)	
105533090	5912	Double rim cylinder	

Product codes in the table are configured as master keyed.

Round mortice cylinder

For use with American style locking devices accepting screw-in / ANSI cylinders.

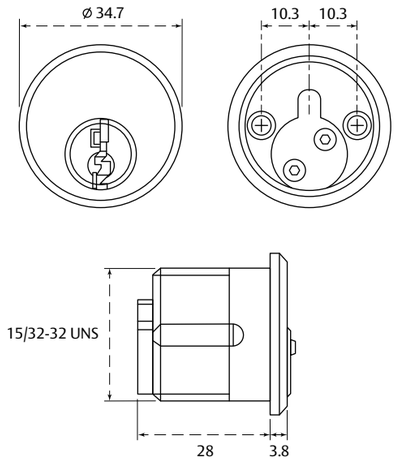

Features and benefits

- Cylinder screws into lockcase 32 TPI (threads per inch) with cam driver on back
- American style cam provided as standard
- Standard cam suits American style lockcase. Special cams are available for other lockcase makes
- State lock type when ordering to ensure that correct cam is supplied
- 5951 round threaded cylinders are also available with micro switch, for use as a momentary action key switch
- See electromechanical locking section for further information
- Spacer rings available in 3 sizes, 5, 9 & 12mm. Security shroud available (stainless steel)

How to order

Product code	Cylinder reference	Description	Finish
105565090	5951	Single mortice cylinder	Add suffix: 13 = SC 20 = B
105566090	5952	Double mortice cylinder	
105568090	5951K	Single key switch cylinder	

Product codes in the table are configured as master keyed.

Round rim cylinder

For use with rim locks and other locking devices accepting rim cylinders.

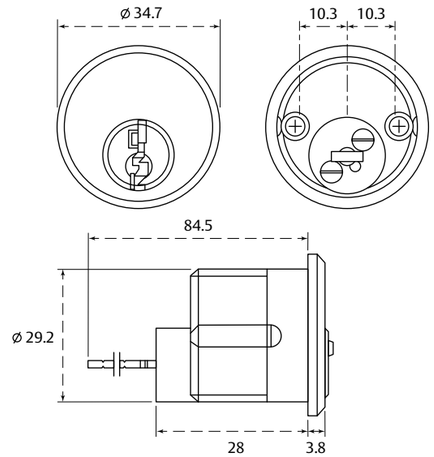

Features and benefits

- Cylinders fixed from outside with tailpiece passing through door into back of surface fixed lock
- Supplied with 50mm tailpiece as standard. 150mm length extended tailpiece available
- Cylinder fixed from inside with 2 screws
- UNC 12-24 screws (6-pin), supplied with cylinder
- Supplied with a 5mm spacer ring and fixing screws
- 35mm cylinder face diameter

How to order

Product code	Cylinder reference	Description	Finish
105567090	5957	Rim cylinder	Add suffix 13 = SC, 20 = B

Product codes in the table are configured as master keyed.

Euro profile single cylinder

For use with lockcases accepting Euro profile cylinders.

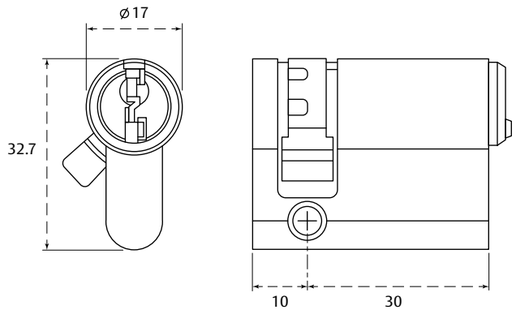

Features and benefits

- Cylinders provided with a multi position cam as standard
- Drill protection in cylinder plug and body
- Lengths starting at +0 (40mm overall) available in 5mm increments up to +40 (80mm overall)
- Extended length cylinders above +40 in size are also available utilising the M20 modular platform
- Cylinders are supplied with a fixing screw as standard

How to order

Product code	Cylinder reference	Description	Finish
105550090	5923 +0	Single Euro (40mm)	Add suffix: 13 = SC 20 = B
105551090	5923 +5	Single Euro (45mm)	
105552090	5923 +10	Single Euro (50mm)	

Product codes in the table are configured as master keyed.
Other cylinder sizes available on request.

Euro profile double cylinders

For use with lockcases accepting Euro profile cylinders.

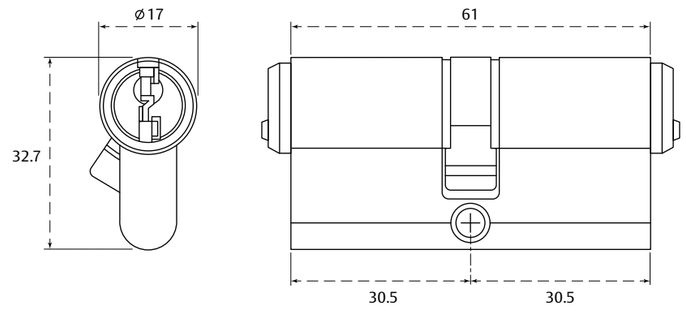

Features and benefits

- Cylinders provided with DIN 18252 cam
- Drill protection in cylinder plug and body
- Lengths starting at +0+0 (61mm) available in 5mm increments up to +40+40 (140mm)
- Offset lengths also available (any size up to +40 / 70mm per side)
- Extended length cylinders above +40 in size are also available utilising the M20 modular platform
- Cylinders are supplied with a fixing screw as standard

How to order

Product code	Cylinder reference	Description	Finish
105553090	5922 +0+0	Double Euro (61mm)	Add suffix: 13 = SC 20 = B
105554090	5922 +5+5	Double Euro (70mm)	
105555090	5922 +10+10	Double Euro (80mm)	

Product codes in the table are configured as master keyed.
Other cylinder sizes available on request.

Euro profile key and turn cylinders

For use with lockcases accepting Euro profile cylinders.

5927

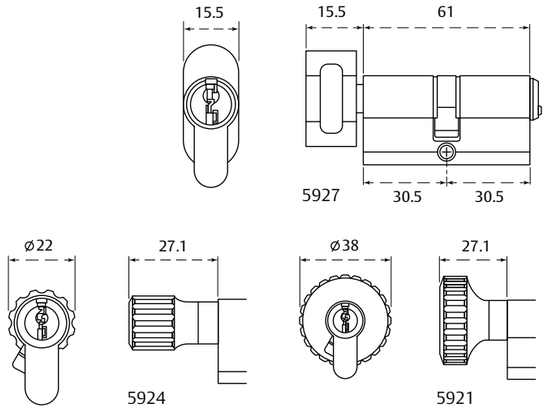

Features and benefits

- Cylinders provided with DIN 18252 cam
- Drill protection in cylinder plug and body
- Lengths starting at +0+0 (61mm) available in 5mm increments up to +40+40 (140mm)
- Offset lengths also available (any size up to +40 / 70mm per side)
- Extended length cylinders above +40 in size are also available utilising the M20 modular platform
- 3 thumbturn designs available to choose from: oval, small round and large round
- Cylinders are supplied with a fixing screw as standard

How to order

Product code	Cylinder reference	Description	Finish
105562090	5927 +0+0	Key and turn Euro – oval turn (61mm)	Add suffix: 13 = SC 20 = B
105563090	5927 +5+5	Key and turn Euro – oval turn (70mm)	
105564090	5927 +10+10	Key and turn Euro – oval turn (80mm)	
105559090	5924 +0+0	Key and turn Euro – small turn (61mm)	Add suffix: 13 = SC 20 = B
105560090	5924 +5+5	Key and turn Euro – small turn (70mm)	
105561090	5924 +10+10	Key and turn Euro – small turn (80mm)	
105556090	5921 +0+0	Key and turn Euro – large turn (61mm)	Add suffix: 13 = SC 20 = B
105557090	5921 +5+5	Key and turn Euro – large turn (70mm)	
105558090	5921 +10+10	Key and turn Euro – large turn (80mm)	

Product codes in the table are configured as master keyed.
Please note: Handing of classroom function must be specified when placing order.
Other cylinder sizes available on request.

Oval profile single cylinder

For use with lockcases accepting oval profile cylinders.

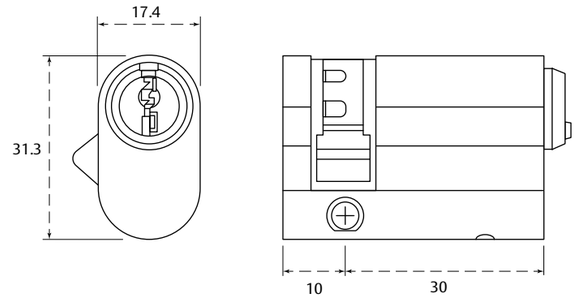

Features and benefits

- Cylinders provided with multi position cam as standard
- Drill protection in cylinder plug and body
- Lengths starting at +0 (40mm overall) available in 5mm increments up to +10 only (50mm overall)
- Extended length cylinders above +10 are not available with the M20 modular platform
- Cylinders are supplied with fixing a screw as standard

How to order

Product code	Cylinder reference	Description	Finish
105535090	5933 +0	Single oval (40mm)	Add suffix: 13 = SC 20 = B
105536090	5933 +5	Single oval (45mm)	
105536090	5933 +10	Single oval (50mm)	

Product codes in the table are configured as master keyed.

Oval profile double cylinder

For use with lockcases accepting oval profile cylinders.

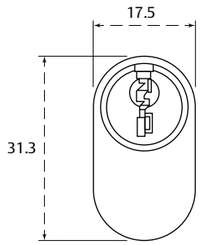

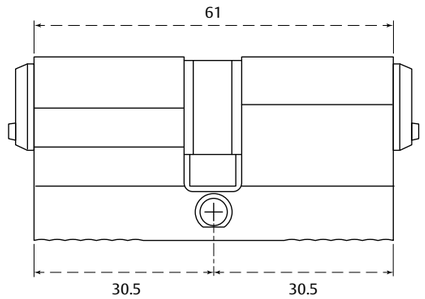

Features and benefits

- Drill protection in cylinder plug and body
- Lengths starting at +0+0 (61mm) available in 5mm increments up to +10+10 only (80mm)
- Offset lengths also available (any size up to +10 / 40mm per side)
- Extended length cylinders above +10 are not available with the M20 modular platform
- Cylinders are supplied with a fixing screw as standard

How to order

Product code	Cylinder reference	Description	Finish
105538090	5932 +0+0	Double oval (61mm)	Add suffix: 13 = SC 20 = B
105539090	5932 +5+5	Double oval (70mm)	
105540090	5932 +10+10	Double oval (80mm)	

Product codes in the table are configured as master keyed.

Oval profile key and turn cylinder

For use with lockcases accepting oval profile cylinders.

5937

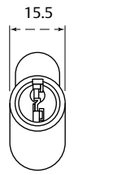

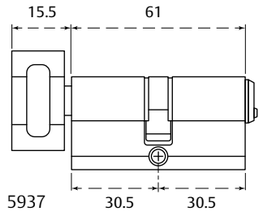

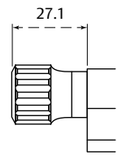

5934

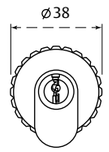

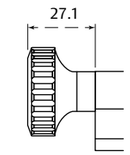

5931

Features and benefits

- Drill protection in cylinder plug and body
- Lengths starting at +0+0 (61mm) available in 5mm increments up to +10+10 only (80mm)
- Offset lengths also available (any size up to +10 / 40mm per side)
- Extended length cylinders above +10 are not available with the M20 modular platform
- 3 thumbturn designs available to choose from: oval, small round and large round
- Cylinders are supplied with a fixing screw as standard

How to order

Product code	Cylinder reference	Description	Finish
105547090	5937 +0+0	Key and turn oval – oval turn (61mm)	Add suffix: 13 = SC 20 = B
105548090	5937 +5+5	Key and turn oval – oval turn (70mm)	
105549090	5937 +10+10	Key and turn oval – oval turn (80mm)	
105544090	5934 +0+0	Key and turn oval – small turn (61mm)	Add suffix: 13 = SC 20 = B
105545090	5934 +5+5	Key and turn oval – small turn (70mm)	
105546090	5934 +10+10	Key and turn oval – small turn (80mm)	
105541090	5931 +0+0	Key and turn oval – large turn (61mm)	Add suffix: 13 = SC 20 = B
105542090	5931 +5+5	Key and turn oval – large turn (70mm)	
105543090	5931 +10+10	Key and turn oval – large turn (80mm)	

Product codes in the table are configured as master keyed.
Please note: Handing of classroom function must be specified when placing order.
Other cylinder sizes available on request.

Cam locks

For use on cabinet doors and similar applications.

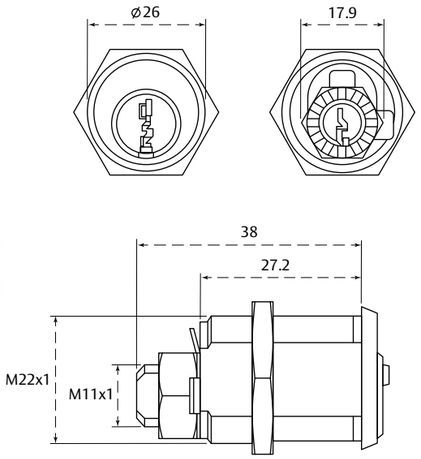

Features and benefits

- Easily adjustable for door thicknesses up to 23mm
- Catches should be specified separately
- Standard catch reference 05 is shown; please contact us for details on alternatives and availability

How to order

Product code	Padlock reference	Description	Finish
10565509011	5971	Cam lock	BC

Product codes in the table are configured as master keyed.

High security class 2 padlock

Solid brass padlock range with hardened steel shackle in a range of variants for medium security internal and external applications.

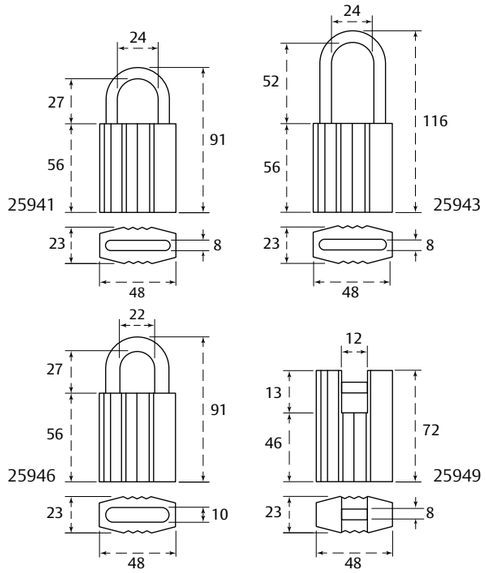

Features and benefits

- Green stripes indicate the product exceeds security requirements of Grade 3 certification in accordance with EN 12320:2012
- Padlock body manufactured from extruded brass and surface black chrome plated
- Rustproof hardened steel shackle available in 8mm or 10mm diameters
- Drainage holes in the padlock body to prevent freezing
- No external screws or rivets for opportune attack
- Tensile resistance/strength over 1.5 tons
- A range of padlock functions available including snap locking, key retaining and closed shackle variants
- Standard shackle clearance 27mm, with 52mm clearance on extended shacklet variant
- A protective dust cover is available for use in conjunction with this padlock

How to order

Product code	Padlock reference	Description	Finish
10557809018	25941	Snap locking	MB
10557909018	25943	Key locking extended shackle	MB
10558009018	25946	Key locking 10mm diameter shackle	MB
10558109018	25949	Key locking closed shackle	MB

Product codes in the table are configured as master keyed.

High security class 3 padlock

Steel padlock range with hardened steel shackle available as open and closed variants, designed for high security external applications.

35941

35949

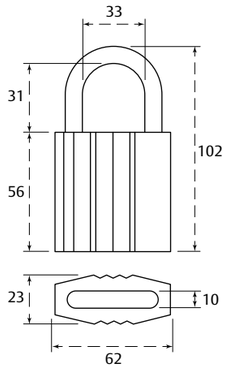

35941

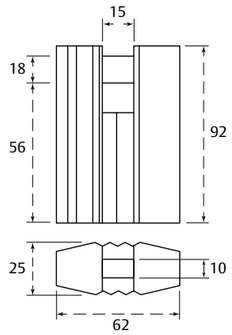

35949

Features and benefits

- Blue stripes indicate the product exceeds security requirements of Grade 4 certification in accordance with EN 12320:2012
- Padlock body manufactured from hardened steel and surface black chrome plated
- Rustproof hardened steel shackle with 10mm diameter
- No external screws or rivets for opportune attack
- Available as opened and closed shackle variants
- Drainage holes in the padlock body prevent freezing
- Tensile resistance / strength of over 4.5 tons
- Shackle clearance of 31mm on open shackle variant, with 18mm clearance on closed shackle variant
- Closed shackle variant utilises sliding bolt design
- A protective dust cover is available for use in conjunction with this padlock

How to order

Product code	Padlock reference	Description	Finish
10558209018	35941	Key locking	MB
10558309018	35949	Key locking closed shackle	MB

Product codes in the table are configured as master keyed.

Class 4 and 5 padlocks

Steel padlock range with hardened steel shackle available as open and closed shackle variants, designed for extremely high security applications where isolation and abuse may be apparent.

45941

55949

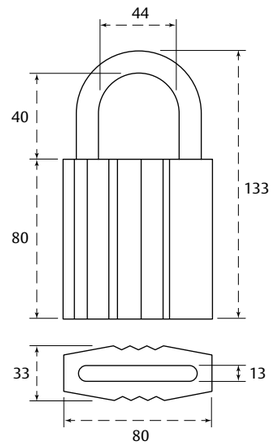

45941

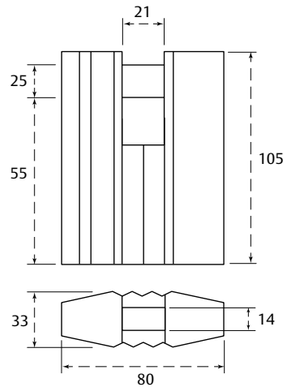

55949

Features and benefits

- Red stripes indicate the product exceeds security requirements Grade 5 (open shackle) or Grade 6 (closed shackle) certification in accordance with EN 12320:2012
- Padlock body manufactured from hardened steel and surface black chrome plated
- Rustproof hardened steel shackle with 13mm diameter
- Drainage holes in the padlock body to prevent freezing
- No external screws or rivets
- Tensile resistance/strength over 10 tons
- Shackle clearance of 40mm on open shackle variant, with 25mm clearance on closed shackle variant
- Closed shackle variant utilises sliding bolt design
- A protective dust cover is available for use in conjunction with this padlock

How to order

Product code	Padlock reference	Description	Finish
10558609018	45941	Key locking	MB
10558409018	55949	Key locking closed shackle	MB

Product codes in the table are configured as master keyed.

WP weather resistant padlocks

Specifically designed for applications where a higher level of corrosion resistance is required or where there are excessive levels of pollution, dirt or moisture to ensure the longevity of your keying system.

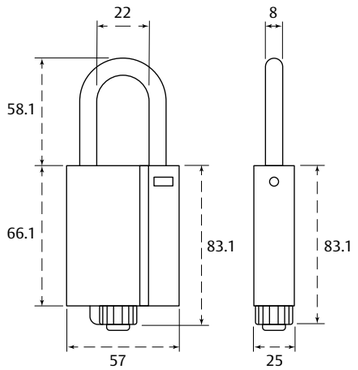

25950

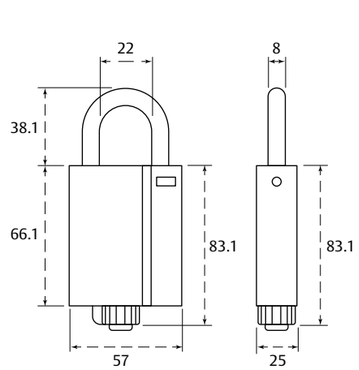

25925

Features and benefits

- Exceeds the security requirements of Grade 3 certification in accordance with EN 12320:2012
- IP68 rated - dust-tight and can withstand continuous immersion in water
- Specially designed 'o rings' are utilized around the shackle and insert cylinder to encapsulate the core, with the securing cap over the keyway to prevent moisture or dust entering from the base of the padlock
- Ideal for harsh environments such as transport and coastal applications
- Padlock body manufactured from steel
- Shackle manufactured from boron steel
- Available with alternative shackle heights, 25mm and 50mm variants
- Operating temperatures: -40° F to +130° F and -40° C to +80° C

How to order

Product code	Padlock reference	Description	Finish
10559009011	25925	Grade 3 weatherproof 25mm shackle	BC
10559109011	25950	Grade 3 weatherproof 50mm shackle	BC

Product codes in the table are configured as master keyed.

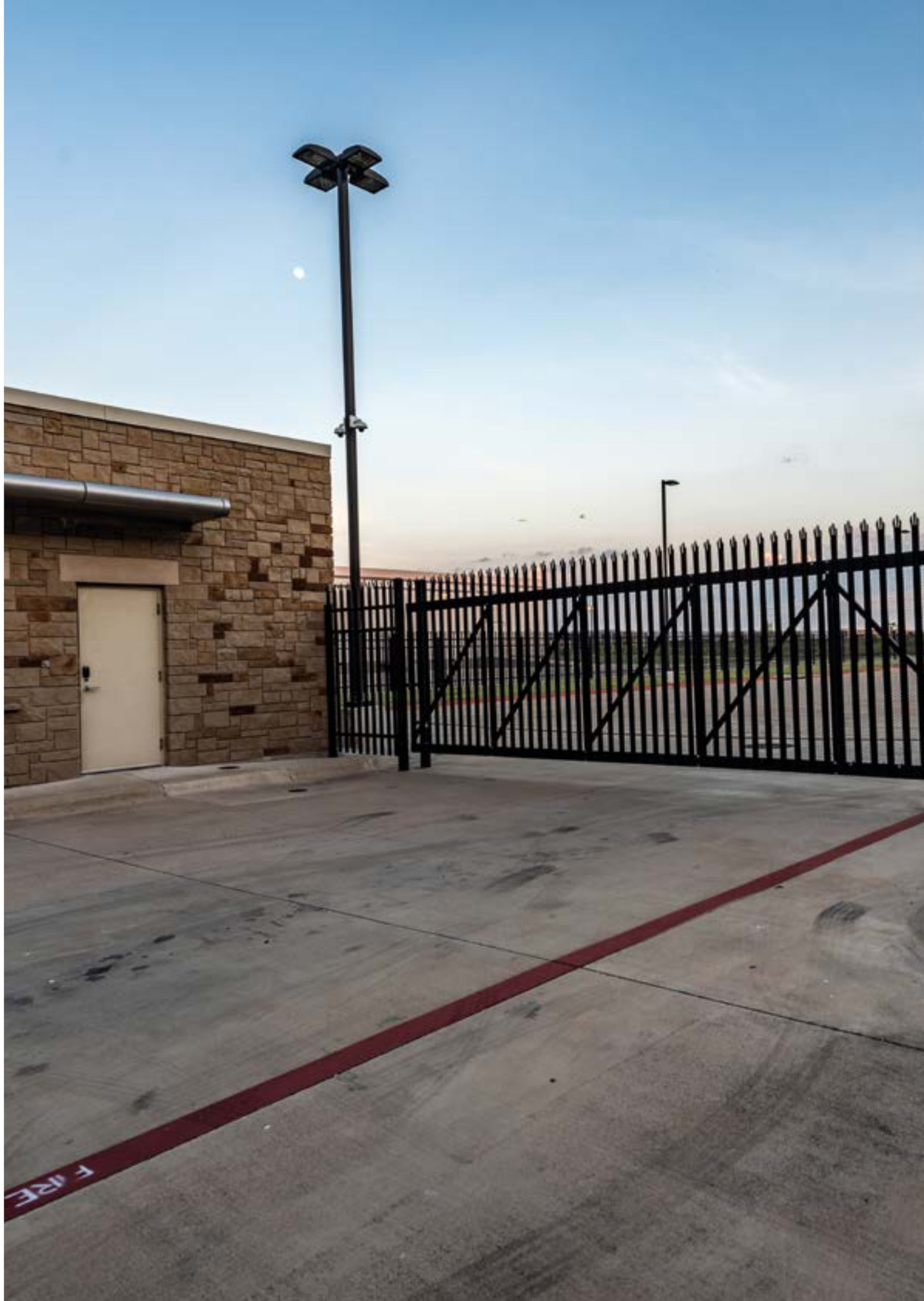

Cylinder accessories

Types of accessories you will find included:

- keyMASTER™ accessories
- keyPRIME accessories
- P600 accessories
- Triton² accessories
- Scandinavian oval accessory kits
- Scandinavian round accessory kits
- Cylinder extension pieces
- P600 and Triton padlock accessories
- Lock spray and cleaner

ASSA ABLOY
Opening Solutions

keyMASTER™ and keyPRIME™ accessories

Product code	Description	Compatible with	Finish	Image
J1000EE	Euro profile escutcheon	keyPRIME™	SC PL	
J1000OE	Oval profile escutcheon	keyPRIME™ keyMASTER™	SC PL	
J53036	Mortice cylinder rose	keyPRIME™ keyMASTER™	SC	
J53041	Mortice cylinder distance collar	keyPRIME™ keyMASTER™	SC	
J53053	High security Euro profile escutcheon 38mm centres	keyPRIME™ keyMASTER™	SC PL	
J53043	High security Euro profile escutcheon 26mm centres	keyPRIME™ keyMASTER™	SC PL	

keyPRIME™ padlock accessories

Product code	Description	Compatible with	Finish	Image
UP-DUSTCOVER	Padlock dust cover	keyPRIME™	MB	

NB: Specifically designed to prevent moisture, dirt and dust from entering the keyway of the keying element of the padlock. Made from durable moulded plastic.

P600 and Triton² accessories

Product code	Description	Compatible with	Finish	Image
1007070013	6mm Euro security escutcheon (external and internal)	P600 TRITON²	SC	
95153700031	220RL Euro escutcheon set (M5 bolt-through)	P600 TRITON²	SS	
95451900031	320SF Euro escutcheon complete set (1 pair)	P600 TRITON²	SS	

Lock spray and cleaner

Product code	Description	Compatible with	Finish	Image
80771810000	Lock spray 1 can (50ml)	All cylinder and padlock systems	N/A	
93603700000	Lock spray (200ml)	All cylinder and padlock systems	N/A	
81629610000	Lock cleaner and de-icer (50ml)	All cylinder and padlock systems	N/A	

Scandinavian oval accessory kits

Product code	Description	Compatible with	Finish	Image
45020217213	256 accessory set 11mm (cylinder ring and turn)	P600 TRITON²	SC	
80462717213	18256 accessory set 11mm (2 x cylinder ring)	P600 TRITON²	SC	
80647517213	2256 accessory set 13mm (rose and cylinder ring)	P600 TRITON²	SC	
80647817213	2256 accessory set 13mm (rose and cylinder ring)	P600 TRITON²	SC	

Scandinavian round accessory kits

Product code	Description	Compatible with	Finish	Image
80235710013	3212 cylinder sleeve only (Scandinavian round cylinders)	P600 TRITON²	SC	
80235710013	3212 accessory 13mm (Scandinavian round double cylinders)	P600 TRITON²	SC	
80970617213	3212b accessory 13mm (Scandinavian round cylinders)	P600 TRITON²	SC	

Cylinder extension pieces – Scandinavian oval and round

Product code	Description	Compatible with	Finish	Image
41868110000	8mm extension pieces for Scandinavian oval cylinders (5pcs)	P600 TRITON²	N/A	
80742510000	10mm extension pieces for Scandinavian oval cylinders (5 pcs)	P600 TRITON²	N/A	
41868210000	12.5mm extension piece for Scandinavian oval cylinders (5 pcs)	P600 TRITON²	N/A	
41868310000	18mm extension pieces for Scandinavian oval cylinders (5 pcs)	P600 TRITON²	N/A	
80232120000	10mm extension piece for Scandinavian oval cylinders (5 pcs)	P600 TRITON²	N/A	

P600 and Triton² padlock accessories

Product code	Description	Compatible with	Finish	Image
10283402000	Protective cover, class 2 padlock	P600 TRITON	MB	
10283403000	Protective cover, class 3 padlock	P600 TRITON	MB	
10283405000	Protective cover, class 4/5 padlock	P600 TRITON	MB	

NB: Specifically designed to prevent moisture, dirt and dust from entering the keyway of the keying element of the padlock. Made from durable moulded plastic.

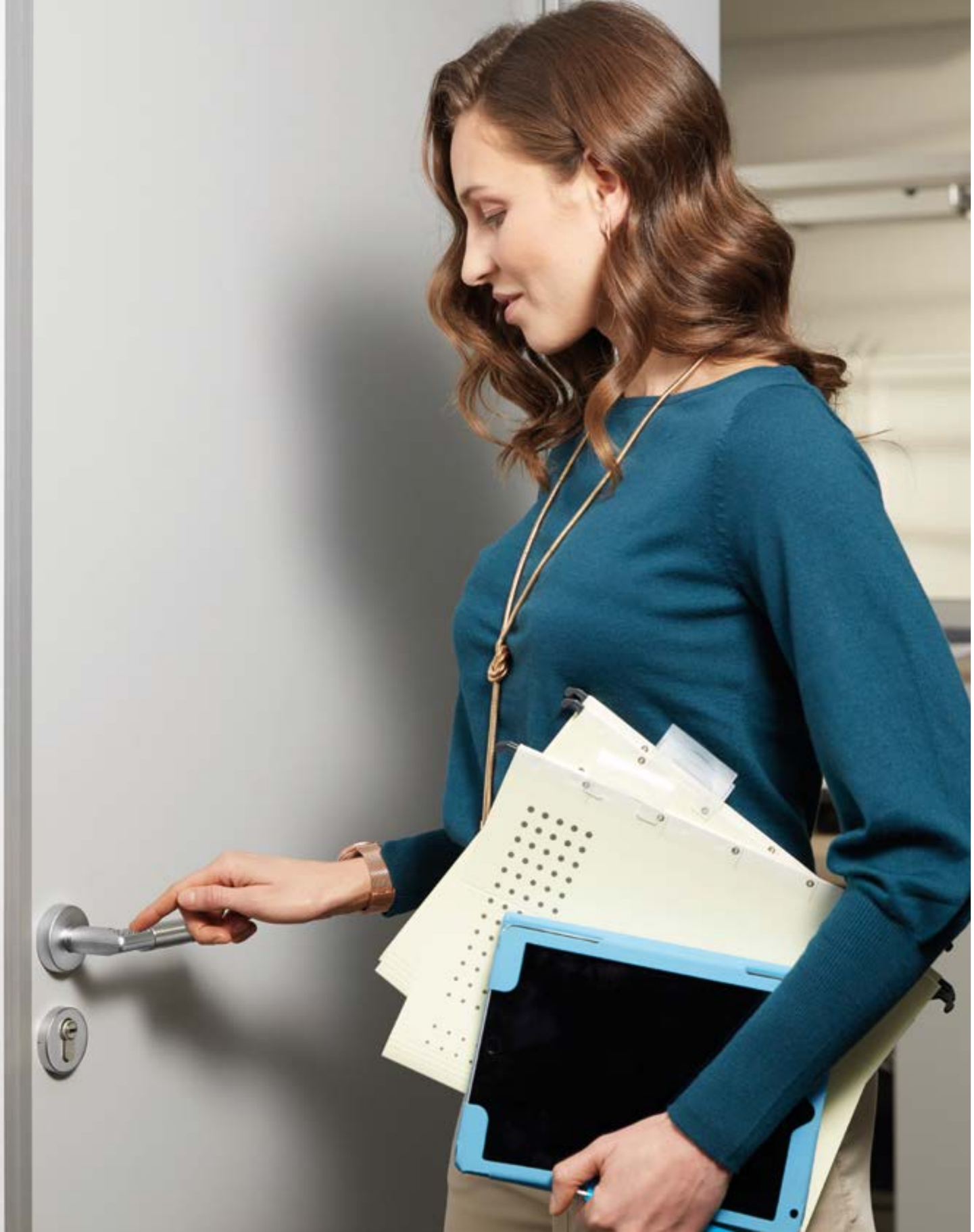

Electromechanical locking

Introduction	640
Legislation	644
Code locks	649
ASSA CLIQ® Remote	671
Electric solenoid bolts	683
Speciality electric locking solutions	689
Electric strikes	705
Electromagnetic locks	729
Electric mortice locks	763
Activation devices and power supplies	783
Accessories	795

Electromechanical locking

Electric locks come in many forms and work in association with a variety of access control systems.

As a world leader we have a comprehensive range of locking solutions from electric strikes and magnets to motor locks, which offer high levels of security, functionality and sustainability.

When specifying locking devices – risk to life versus security must be considered, so whether a locking device is 'fail safe' or 'fail secure' should be a main factor.

No matter which access control system you have, we have an electric locking solution to suit.

Fail safe or fail secure?

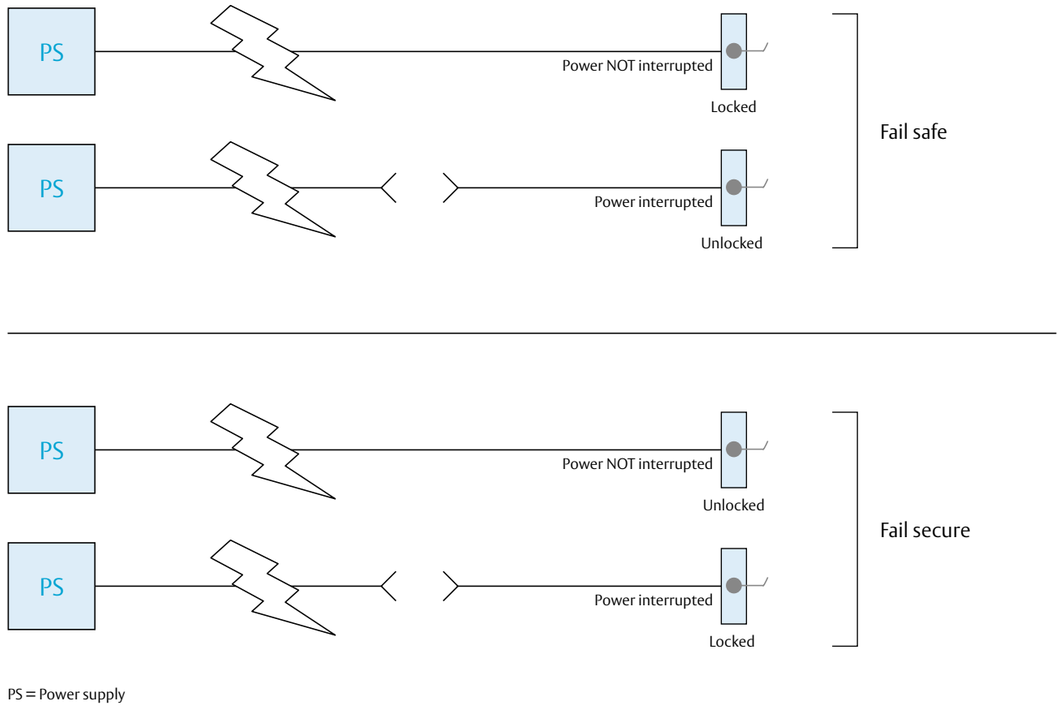

PS = Power supply

Useful terminology

Terminology	Explanation
Fail safe, fail open or power to lock (PTL)	When power to the lock is removed via mains failure, fire or management system - the lock is disengaged, which means the door is unlocked for escape.
Fail secure, fail locked or power to open (PTO)	When power to the lock is removed via mains failure, fire or management system - the lock is engaged, which means the door is locked for security.
Monitoring	Relays the status of the lock (open or closed) back to building management / alarms systems.
Preload test	Ensures the lock still engages and doors continue to operate despite pressures exerted by door seals, air flow and misaligned doors.
Alternating current power (AC)	Alternating current (AC) is an electric current which periodically reverses direction and changes its magnitude continuously with time. Most of the low-cost door entry systems operate on AC, which produces a buzzing sound. AC strikes are only available as fail secure.
Direct current power (DC)	Direct current (DC) is one-directional flow of electric charge. An electrochemical cell is a prime example of DC power. DC may flow through a conductor such as a wire, but can also flow though semiconductors, insulators, or even through a vacuum as in electron or ion beams. The electric current flows in a constant direction. More sophisticated systems operate on DC allowing for continuous, silent, fail safe or fail secure operation.
Power supply units (PSU)	Power supply units (PSU) are not just power supply systems, they are actually power convertors that convert AC high voltage current into DC, they also regulate DC output voltage to tolerances required for modern components. Correctly specifying PSU's will help ensure fault-free use and ensure the PSU puts out the correct voltage required to run electric locks within stated tolerances, thus extending the life of the components connected to it.
Metal oxide varistor (MOV)	A Metal Oxide Varistor is a voltage suppression device that filters and clamps the transient in an electrical circuit.
ANSI standard short faceplate strike	The ANSI (American National Standards Institute) standard short faceplate strike is the standard strike for aluminium doors. A longer face plate variant is available making the ANSI style strike suitable for use in timber door applications.

Range applications

Code locks

What is it?	Where can you use it?
There are three main types of code locks: mechanical push button, battery operated digital locks and keypads.	The main purpose of a code lock is to restrict who can enter through a door, for example to stop customers accessing staff only areas in a shop. The range includes standalone systems and integrated solutions to fit into larger access control systems.

ASSA CLIQ Remote

What is it?	Where can you use it?
Our award winning CLIQ Remote security system combines a cutting-edge mechanical platform with advanced electronic functions.	It is designed to simplify access to single sites, but more specifically businesses spread over multiple locations.

Electric solenoid bolts

What is it?	Where can you use it?
Solenoid bolts are electrically driven into a strike to prevent the door opening.	They are often used in applications where an electric strike is impractical, for example on swing through or double action doors.

Specialty locking solutions

What is it?	Where can you use it?
Our collection includes four types of specialty electric locking solutions, gate locks, electric bolts and strikes, cabinet locks and dual action electromechanical and electromagnetic.	The range features both internal and external devices all with a different intended use. For more information please refer to the product information page.

Electric strikes

What is it?	Where can you use it?
An electric strike is electronically controlled by a solenoid that temporarily releases the jaw allowing the door to be opened.	Our range includes high security, mortice and rim mounted options and can be used for both inward and outward opening doors.

Electromagnetic locks

What is it?	Where can you use it?
Electromagnetic locks are made up of two components, an electromagnet and an armature plate. A strong magnetic flux is created when the armature plate is in contact with the energised electromagnet, which locks the two parts together.	Our range features products for both internal and external direct pull devices with robust and sleek finishes. Magnetic locks are easy to retrofit.

Electric mortice locks

What is it?	Where can you use it?
We offer two types of electric mortice lock: motor locks, where an electric motor opens or closes the lock bolt and electric handle-controlled locks, where the lock can also be opened with a handle when the power is on. Both are installed into a pocket cut into the door leaf and need connection to a power supply.	They are mainly used in high security, high traffic areas where reliability and security are key considerations.

Activation devices and power supplies

What is it?	Where can you use it?
All electric locking devices require a power supply and the appropriate accessories to function.	Our accessories range include key items to signal locks to operate and our three types of power supplies all have different functions and capabilities.

ASSA ABLOY
Opening Solutions

Legislation

EN 14846 – Electromechanically operated locks and striking plates

EN 14846 is a comprehensive 9-digit classification system for assessing the wide range of Electromechanical locks and strike products needed to satisfy the diverse requirements of the European market.

Within the EN 14846 standard, a range of performance features are assessed including normal use (and abuse) forces, long-term durability, fire/smoke resistance, corrosion, temperature and humidity resistance, and security from both physical attack and electromechanical manipulation.

EN 14846:2008 classification key

	EN 14846:2008 Grading scope
CATEGORY OF USE Three categories of use are identified (see below) and the forces/torques specified, reflect this: **Grade 1:** Low frequency of use by people with a high incentive to exercise care and a small chance of misuse, e.g. internal residential doors **Grade 2:** Medium frequency of use by people with some incentive to exercise care but where there is some chance of misuse, e.g. internal office doors **Grade 3:** High frequency of use by public or others with little incentive to exercise care and with a high chance of misuse, e.g. doors in public buildings	(1-3)
DURABILITY Thirteen grades are identified with minimum figures for deadbolt operation (manual, automatic and electrical) and latchbolt operation (with and without side load) as shown.	(A-Y)
DOOR MASS AND CLOSING FORCE Nine grades are identified with maximum figures for closing force at various door masses as shown. Note: closing force is from a standing start: i.e. fully extended latchbolt in contact with striking plate at start of test.	(1-9)
SUITABILITY FOR USE ON FIRE/SMOKE DOORS Seven grades are identified in ascending order of smoke/fire resistance as shown.	(0-F)
SAFETY No requirement, but note: an electromechanically operated lock or striking plate conforming to this standard can, at the same time, also be part of an exit device conforming to EN 179 or EN 1125, or part of an exit system conforming to prEN 13633 or prEN 13637.	(NPD)

Durability

Deadbolt operations (manual)		10,000	25,000	50,000
Latchbolt operations and deadbolt operations (automatic and electrical)		50,000	10,000	200,00
Side load on latchbolt	(No load)	Grade A	Grade B	Grade C
	10 N	Grade F	Grade G	Grade H
	25 N	-	Grade L	Grade M
	50 N	-	Grade R	Grade S
	120 N	-	Grade W	Grade X
	250 N	-	-	Grade Y

Door mass and closing force

Maximum closing force	Door mass: Up to 100kg	Up to 200kg	Above 200kg
50 N	Grade 1	Grade 2	Grade 3
25 N	Grade 4	Grade 5	Grade 6
15 N	Grade 7	Grade 8	Grade 9

Suitability for use on fire/smoke doors

Grade	Fire/smoke resistance requirement
0	No requirement (not intended for use on fire/smoke doors)
A	Suitable for use on smoke door assemblies
B	Suitable for use on smoke/fire door assemblies (> 15 minutes)
C	Suitable for use on smoke/fire door assemblies (> 30 minutes)
D	Suitable for use on smoke/fire door assemblies (> 60 minutes)
E	Suitable for use on smoke/fire door assemblies (> 90 minutes)
F	Suitable for use on smoke/fire door assemblies (> 120 minutes)

ASSA ABLOY
Opening Solutions

EN 14846:2008 classification key

EN 14846:2008
Grading scope

CORROSION RESISTANCE
Fifteen grades are identified with neutral salt-spray (NSS) corrosion resistance grades from EN 1670:1998, and with temperature and humidity resistance requirements as shown.

(0-P)

SECURITY
Seven grades are identified with minimum figures for requirements relating to physical attack. Principal requirements are shown below.

(0-7)

SECURITY – ELECTRICAL FUNCTION
Two grades are identified according to whether or not there is status indication as follows:

Grade 0: No status indication

Grade 1: Audio or visual signal from lock to indicate that deadbolt is fully thrown and deadlocked

(0-1)

SECURITY – ELECTRICAL MANIPULATION
Four grades are identified indicating required levels of resistance to various forms of manipulation and interference as shown:

(0-3)

Corrosion resistance

Corrosion resistance	Temperature resistance range			
	No reqt	+5 to +55˚C	-10 to +55˚C	-25 to +70˚C
No defined resistance	Grade 0 Grade A (1) Grade B (2)	-	-	Grade N (1) Grade P (2)
24 hours	-	Grade C (1)	-	-
48 hours	-	Grade D (1)	Grade G (1)	Grade K (2)
96 hours	-	Grade E (1)	Grade H (1)	Grade L (2)
240 hours	-	Grade F (1)	Grade J (1)	Grade M (2)

Note: Humidity requirements (Level 1 or 2) are shown in brackets.

Security

Grade	Drilling time	Side load	Deadbolt projection	End load
0	-	-	-	-
1	-	1 kN	10mm	1 kN
2	-	3 kN	12mm	2 kN
3	-	5 kN	14mm	4 kN
4	-	7 kN	20mm	5 kN
5	3 minutes	7 kN	20mm	5 kN
6	-	10 kN	20mm	6 kN
7	5 minutes	10 kN	20mm	6 kN

Security – electrical manipulation

Requirement	Grade 0	Grade 1	Grade 2	Grade 3
Voltage drop protection	-	-	Yes	Yes
Protection against cutting of cables	-	-	Yes	Yes
Protection against wire manipulation	-	-	-	Yes
Resistance to electromagnetic manipulation	-	-	Yes	Yes
Resistance to electrostatic discharge	-	Level 2	Level 4	Level 4
Resistance to electrostatic manipulation	-	-	Level 4	Level 4

Other important legislation

Due to the nature of electromechanical hardware the various solutions offered can often be tested in accordance with elements of other standards already covered in this manual such as;

- EN 12209 – locks, latches and locking plates
- EN 1303 – cylinders for locks
- EN 1906 – door furniture

Other standards and certification relevant to electromechanical hardware are as follows. If you require more information on these standards, please contact us.

- EN 15685 – multipoint locks, latch and locking plates
- EN 61000-6-3 – electromagnetic compatibility
- EN 50130-4:2011+A1:2014 – electromagnetic compatibility for alarm and fire alarm systems
- SSF 3522-1093 – burglar resistant fixed mounted lock units

Further legislation and certification information can be found in the Standards and legislation section

Code locks

Code locks work as an access control device to restrict who can enter through a door. They can be used in both public and private areas, for example in a school to stop children accessing staff-only areas. Our range offers both standalone systems and integrated solutions that fit into larger access control systems.

There are three main types of code locks in our range:

Mechanical push button locks

Easy to install, our MPB range offers coded access suitable for a variety of internal applications. A single, easily changed code is required making mechanical locks an ideal access control solution.

Battery operated digital code locks

A standalone, effective digital access control. The functionality provides major benefits as the digital locks do not require complex wiring, ID cards or external power, making them cost effective for many applications.

Keypads

A standalone solution offered in various levels of security making them ideal for both internal and external environments.

Range benefits

- Consists of multiple solutions from portable devices to permanent ones
- Products that reach the highest UK standards including BS 8607
- Can be fitted in standalone applications or as part of larger system or access control setup
- Simple way to provide security and restrict access into buildings
- Available with key override
- Variants to suit both Modular and DIN-standard lockcases

CodeGUARD5

The toughest and most secure push button mechanical lock on the market.

Features and benefits

- The only lock that meets BS 8607 grade 5
- High corrosion resistance with grade 304 stainless steel
- Universal handing and fixings for timber and metal doors
- Ergonomic styled handles and attractive finish
- Secure bolt-through fixings
- 20mm deadlocking latch for high attack resistance
- Auxiliary latch for automatic deadlocking when door shuts
- Enhanced security strike box protects against end and side load attacks, tested to withstand a constant force of 10KN/m for 60 seconds

Testing and certification

UKCA / CE marked (fire)	Yes (latch assembly only)
UKCA / CE marked (EMC)	N/A
Certified in compliance with	BS 8607 grade 5, EN 1634-1
Suitable for fire doors	Timber FD30/FD60, metal FD240 (intumescent kit must be used)
Secured by Design approved	Yes
Guarantee	3 years

Specification

Use	Interior and exterior use
Tested to	200,000 cycles
Code	2,000+ combinations, 8-digit keypad
Dimensions (H x W x D) front plate	228 x 128 x 74mm
Dimensions (H x W x D) back plate	210 x 128 x 52mm
Dimensions (H x W x D) strike	85 x 48 x 1mm
Dimensions (H x W x D) latch	95 x 32 x 108mm
Latch size	20mm
Finish	SS
Accessories	See electromagnetic accessories section for items such as the intumescent kit

Dimensions

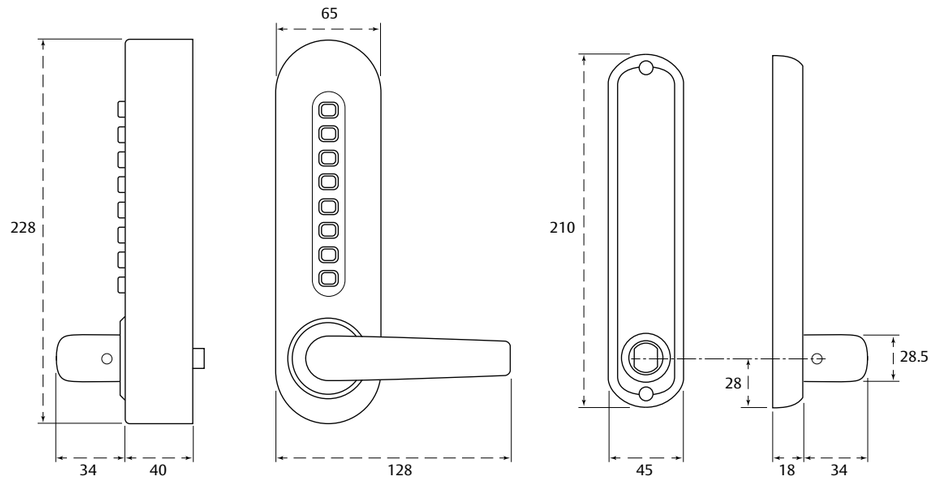

How to order

Order code	Description	Finish
J8607CG5-SS	CodeGUARD 5 mechanical push button lock	SS

Code Handle round rose

A simple and easy way of adding access control to almost any door, Code Handle is a stylish pin activated electromechanical lever that keeps your private or sensitive items secure.

Features and benefits

- Pin activated electromechanical lever on round rose for interior doors
- For simple, effective keyless locking/unlocking of interior doors in light commercial and residential environments
- Easy to install and retrofit by two screws onto almost any interior door, with no keys, no wires and no expensive access control system required
- Compatible with DIN and Scandinavian standard lockcases
- DIN and Scandinavian models with 8mm sized spindle
- Auto-lock and permanent unlocked functionalities
- Visual LED displays status locked or unlocked
- Adjustable on and off acoustic signals for operation of lever and pressing the buttons

Testing and certification

UKCA / CE marked (EMC)	Yes
Certified in compliance with	EN 61000-6-2, 6-3, EN 61000-4-2, 4-3, 4-8 , EN 1634-1
Suitable for fire doors	Timber FD30
Guarantee	2 years

Specification

Use	Interior doors only, DIN and Scandinavian lockcases
Tested to	100,000 cycles
Functionalities	Auto lock and permanent unlock
Code	9 user codes (4 – 6 digits), 1 master code (6 digits)
Signals	Visual: LED display (green, red) Acoustic: adjustable on/off
Spindle	8mm
Door thickness	35 - 80mm, Spacer ring available for thinner doors
Dimensions (H x W x D)	50 x 141 x 70mm
Power supply	2 × lithium-ion batteries 3 V (CR2); > 30,000 cycles life
Finish	SS
Accessories	See electromagnetic accessories section for items such as the battery lid cover and the 7.5mm distance spacer ring

Dimensions

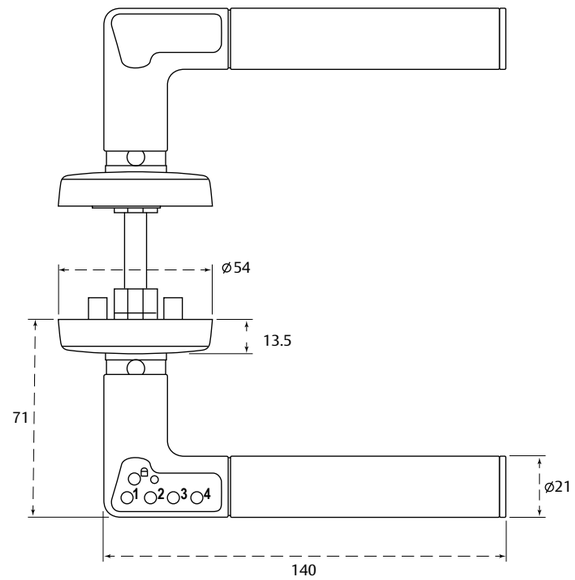

How to order

Order code	Description	Finish
CHD-8810-LH	Code Handle Scandinavian round rose left	SS
CHD-8810-RH	Code Handle Scandinavian round rose right	SS
CHD-8812-8LH	Code Handle DIN round rose left	SS
CHD-8812-8RH	Code Handle DIN round rose right	SS
CHD-8802-8LH	Code Handle DIN round rose without code left	SS
CHD-8802-8RH	Code Handle DIN round rose without code right	SS

ASSA ABLOY
Opening Solutions

Code Handle long plate

A simple way of adding access control to almost any door, Code Handle long plate version enables replacement where existing escutcheons may have been used.

Features and benefits

- Pin activated electromechanical lever on backplate for interior doors
- For simple, effective keyless locking/unlocking of interior doors in light commercial and residential environments
- Easy to install and retrofit by two screws onto almost any interior door, with no keys, no wires and no expensive access control system required
- DIN 72mm centres
- Supplied with 8mm sized spindle
- Auto-lock and permanent unlocked functionalities
- Visual LED displays status locked or unlocked
- Adjustable on and off acoustic signals for operation of the lever and pressing the buttons

Testing and certification

UKCA / CE marked (EMC)	Yes
Certified in compliance with	EN 61000-6-2, 6-3 and EN 61000-4-2, 4-3, 4-8
Suitable for fire doors	No
Guarantee	2 years

Specification

Use	Interior doors only, DIN and Scandinavian lockcases
Tested to	100,000 cycles
Functionalities	Auto lock and permanent unlock
Code	9 user codes (4 – 6 digits), 1 master code (6 digits)
Signals	Visual: LED display (green, red) Acoustic: adjustable on/off
Spindle	8mm
Door thickness	35 - 80mm. Spacer ring available for thinner doors
Dimensions (H x W x D)	253 x 141 x 71mm
Power supply	2 × lithium-ion batteries 3 V (CR2); > 30,000 cycles life
Finish	SS
Accessories	N/A

Dimensions

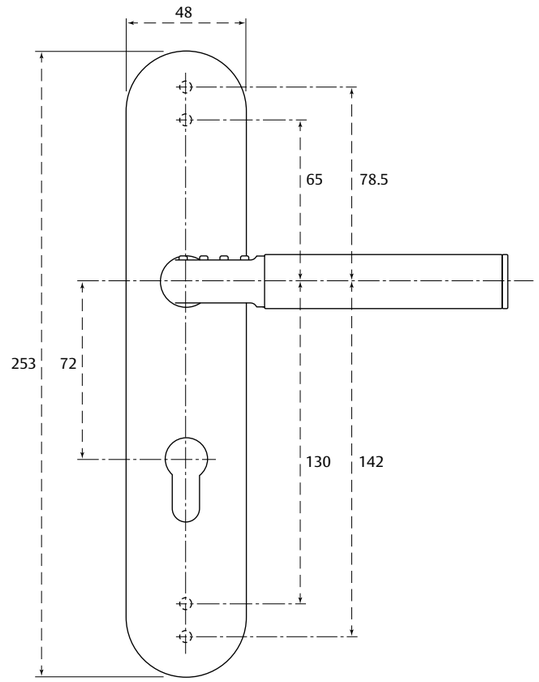

How to order

Order code	Description	Finish
CHD-8832-8LH	DIN long plate left	SS
CHD-8832-8RH	DIN long plate right	SS

ASSA ABLOY
Opening Solutions

Codoor CD30

A digital code lock ideal for areas where access needs to be restricted. It also provides out of hours physical security when used with a mechanical deadlock.

Features and benefits

- Simple to retro fit to an existing lock with no cabling required
- Programmed from the keypad, without removing the unit from the door
- Programmed to resist attempts to gain access by random trial of codes
- Always-open function to permit free access via the lever handle when required
- Features low-power warning and diagnostic mode
- Can be used with any ASSA modular or connect lockcase which operates via lever handles
- Cylinder, handle and lockcase supplied separately

Testing and certification

UKCA / CE marked (EMC)	Yes
Certified in compliance with	EN 61000-6-2, 6-3
Suitable for fire doors	No
Guarantee	1 year

Specification

Use	Interior doors, IP30 rated, Scandinavian, modular and connect lockcases
Codes	9 user codes (4 digits) Up to 10,000 codes available
Signals	Acoustic
Dimensions (H x W x D)	64 x 245 x 53 mm
Power supply	Two Lithium 9V type 6LR61 batteries required
Finish	SS
Accessories	See electromagnetic accessories section for items such as the 9V lithium battery and the horseshoe spring 309

Dimensions

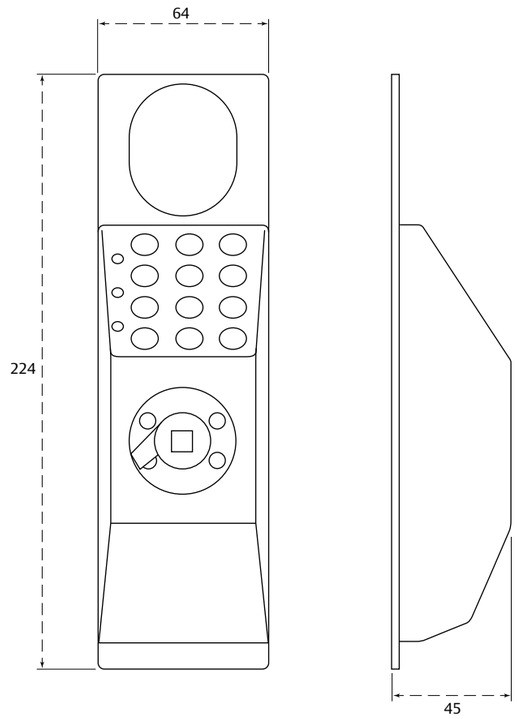

How to order

Order code	Description	Finish
AA-CD30	Codoor CD30 C/W batteries	SS

ASSA ABLOY
Opening Solutions

22CL

A code lock digital keypad for use within access control systems both internally and externally.

Features and benefits

- 4 or 6 digit passcode and up to 7 passcodes can be stored at one time
- Auto-expiry code function
- Automatic anti-manipulation function
- Anti-tailgating available when used with a monitored electric strike
- Can be connected to a remote switch or timer which makes certain codes valid at particular times of the day
- Unit is programmed from the keypad
- System memory is non-volatile to prevent data loss
- Compatible with electric strikes, motor locks, and other locking devices

Testing and certification

UKCA / CE marked (EMC)	Yes
Certified in compliance with	EN 61000-6-2, 6-3
Guarantee	1 year

Specification

Use	Interior and external doors, IP54 rated
Codes	7 user codes (4 or 6 digits) Up to 1,000,000 codes available when using 6 digits
Signals	Visual: LED display (backlighting can be turned off) Acoustic: adjustable on/off
Dimensions (H x W x D)	164 x 77 x 36mm
Power supply	12-24 V AC/DC
Finish	SIL, BLK
Accessories	N/A

Dimensions

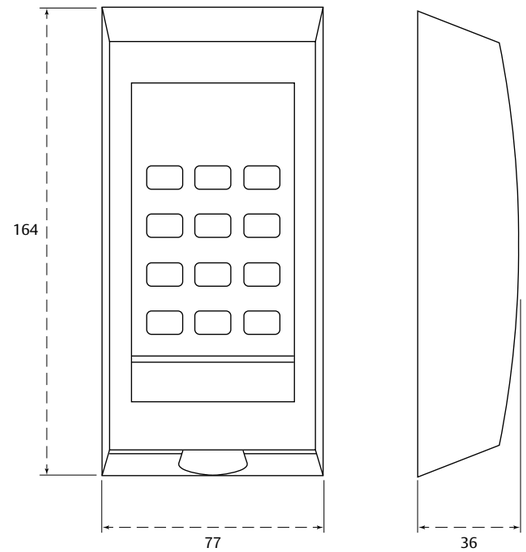

How to order

Order code	Description	Finish
53222200084	22CL code lock	BLK
53222200086	22CL code lock	SIL

ASSA ABLOY
Opening Solutions

DK-12

All in one digital keypad system for single door traffic control with lower-level security requirements.

Features and benefits

- MagnaCare® lifetime replacement, no-fault, no questions asked warranty
- Easy to install with simple hand tools and easy to program from the keypad
- Optional rain cover (WCC) and gasketed backbox (WBB) allow reliable use for exterior areas not directly exposed to rain or snow
- Single gang, stainless steel plate with low voltage mounting ring
- 12-key illuminated 3x4 keypad
- Configurable audible keystroke echo
- Passage mode and lockout mode
- Request to exit (REX) input

Specification

Use	Interior and external doors, IP54 rated
Operational temperature	-23°C to +60°C
Codes	99 user codes (10-digit operation, plus * and # keys)
Signals	Red, green and yellow LEDs for status and programming feedback Configurable audible keystroke echo
Current drawer	100mA at 12 or 24V DC 325mA at 12 or 24V DC Max 30V input 5A SPDT timed, control relay output
Dimensions (H x W x D)	114 x 70 x 14mm
Power supply	12 or 24VDC
Finish	SS
Accessories	See electromagnetic accessories section for items such as the weather box and weather box cover

Dimensions

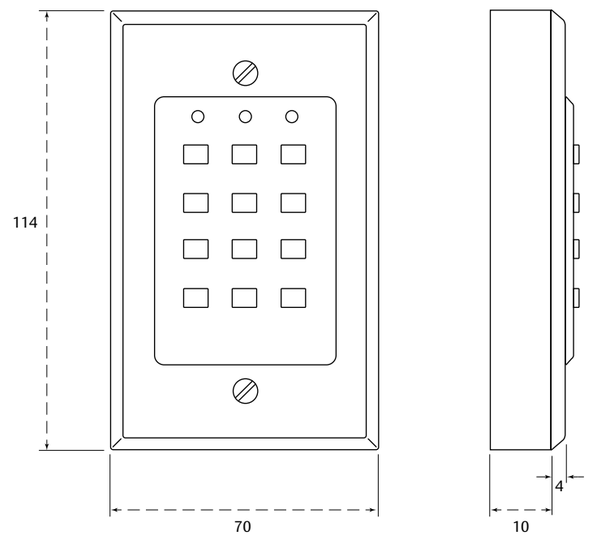

Testing and certification

UKCA / CE marked (EMC)	N/A
Certified in compliance with	No
Guarantee	Lifetime

How to order

Order code	Description	Finish
DK-12	DK-12 digital keypad	SS

ASSA ABLOY
Opening Solutions

DK-16

Secure, easy to programme digital keypad system for single door traffic control, with medium to high security requirements.

Features and benefits

- MagnaCare® lifetime replacement, no-fault, no questions asked warranty
- Tamper resistant keypad encased in a separate enclosure for secure installation in a protected area
- Controller offers request to exit (REX) input and relay output for lock control, alarm shunt or other interfaces
- Optional rain cover (WCC) and gasketed backbox (WBB) allow reliable use for exterior areas not directly exposed to rain or snow
- 12-key keypad with engraved and paint filled numbers
- True 10-key operation (keys are not paired)
- User code and hard code disable feature
- Passage and lockout modes

Testing and certification

UKCA / CE marked (EMC)	N/A
Certified in compliance with	No
Guarantee	Lifetime

Specification

Use	Interior and exterior doors
Operational temperature	CPU 0ºC to +70ºC Keypad 0ºC to +43ºC indoor use
Codes	59 user codes (10-digit operation)
Signals	Red, green and yellow LEDs for status and programming feedback Audible keystroke echo
Current drawer	12 VAC/VDC: 7 mA at rest; 160 mA active 24 VAC/VDC: 20 mA at rest; 190 mA active
Dimensions (H x W x D)	114 x 70 x 4mm
Power supply	12 or 24VDC
Conductor cable	4.8m 12 conductor 22 gauge keypad cable
Finish	SS
Accessories	See electromagnetic accessories section for items such as the weather box and weather box cover

Dimensions

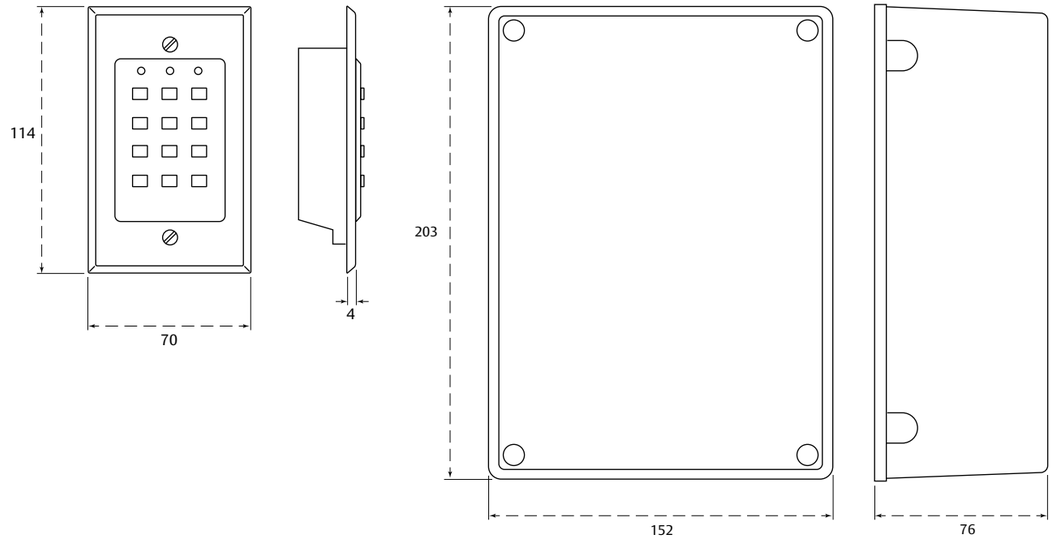

How to order

Order code	Description	Finish
DK-16	DK-16 keypad	SS

ASSA ABLOY
Opening Solutions

DK-26

Digital keypad system for narrow stile outdoor applications that provides medium to high security requirements with control of electric locks, in one or two door applications.

Features and benefits

- MagnaCare® lifetime replacement, no-fault, no questions asked warranty
- Weatherproof and vandal resistant, rugged stainless steel keypad can be mounted in most outdoor environments
- Encased in a separate enclosure for secure installation
- Easy to program
- Cast stainless steel with 11 EPDM rubber keys
- True 10-key operation (keys are not paired)
- User code and hard code disable feature
- Passage mode and lockout mode
- Request to exit (REX) input

Testing and certification

UKCA / CE marked (EMC)	N/A
Certified in compliance with	No
Guarantee	Lifetime

Specification

Use	Interior and external doors (weatherproof)
Operational temperature	-23ºC to +60ºC CPU 0ºC to +70ºC Keypad 30ºC to +70ºC
Codes	59 user codes (10-digit operation)
Signals	Red, green and yellow LEDs for status and programming feedback Audible keystroke echo
Current drawer	12 VAC/VDC: 7 mA at rest; 160 mA active 24 VAC/VDC: 20 mA at rest; 190 mA active
Dimensions (H x W x D)	178 x 38 x 22mm
Power supply	12 or 24VDC
Conductor cable	4.8m 12 conductor 22 gauge keypad cable
Finish	SS
Accessories	N/A

Dimensions

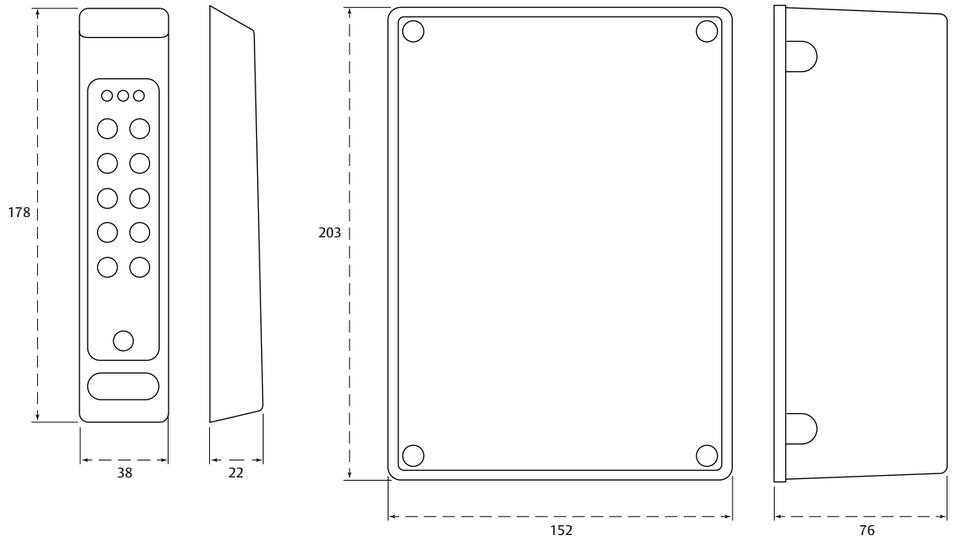

How to order

Order code	Description	Finish
DK-26SS	Digital keypad for external narrow stile applications	SS

ASSA ABLOY
Opening Solutions

DK-37

Weather resistant digital keypad for narrow stile applications, that offers Wiegand output for universal compatibility with access control systems.

Features and benefits

- MagnaCare® lifetime replacement, no-fault, no questions asked warranty
- Compatible with access control systems using Wiegand output
- Mounts on narrow mullion
- 12-key cast stainless steel keypad with silicone rubber keys
- Weather resistant and vandal resistant
- Dual voltage 12 or 24 VDC

Testing and certification

UKCA / CE marked (EMC)	N/A
Certified in compliance with	No
Guarantee	Lifetime

Specification

Use	Interior and external doors
Operational temperature	-30ºC to +70ºC Keypad 30ºC to +70ºC
Codes	59 user codes (10-digit operation)
Signals	Red, green and yellow LEDs for status and programming feedback Audible keystroke echo
Current drawer	12 VAC/VDC: 7 mA at rest; 35 mA active 24 VAC/VDC: 16 mA at rest; 75 mA active
Dimensions (H x W x D)	178 x 38 x 25mm
Power supply	CPU: Dual-voltage 12 VDC or 24 VDC; Minimum 1A supply for the base unit, add supply current for any devices connected to the DC outputs Keypad: 12 VDC: 7 mA at rest; 35 mA active 24 VDC: 16 mA at rest; 75 mA active
Conductor cable	4.88m cable included
Finish	SS
Accessories	N/A

Dimensions

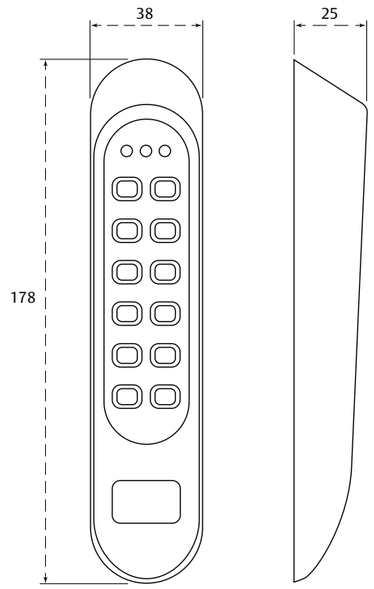

How to order

Order code	Description	Finish
DK-37WSS	Digital keypad for external narrow stile applications with Wiegand output	SS

ASSA ABLOY
Opening Solutions

DK-38

Digital keypad for interior applications which offers Wiegand output for universal compatibility with access control systems.

Features and benefits

- MagnaCare® lifetime replacement, no-fault, no questions asked warranty
- Single gang illuminated keypad features true 10-key operation and a flush-mount stainless steel faceplate
- 12-key illuminated 3x4 keypad
- Compatible with access control systems using standard Wiegand output
- Dual-voltage 12 or 24 VDC
- Tamper detection

Testing and certification

UKCA / CE marked (EMC)	N/A
Certified in compliance with	No
Guarantee	Lifetime

Specification

Use	Interior doors
Operational temperature	-0ºC to +43ºC
Tested to	1,000,000 cycles
Code	59 user codes (10-digit operation)
Signals	Red, green and yellow LEDs for status and programming feedback Audible keystroke echo
Current drawer	12 VAC/VDC: 24 mA at rest; 52 mA active 24 VAC/VDC: 50 mA at rest; 110 mA active
Dimensions (H x W x D)	114 x 70 x 29mm
Power supply	CPU: Dual-voltage 12/24 VDC; Minimum 1A supply for the base unit, add supply current for any devices connected to the DC outputs Keypad: 12 VDC: 24 mA at rest; 52 mA active 24 VDC: 50 mA at rest; 110 mA active
Conductor cable	4.88m cable included
Finish	SS
Accessories	N/A

Dimensions

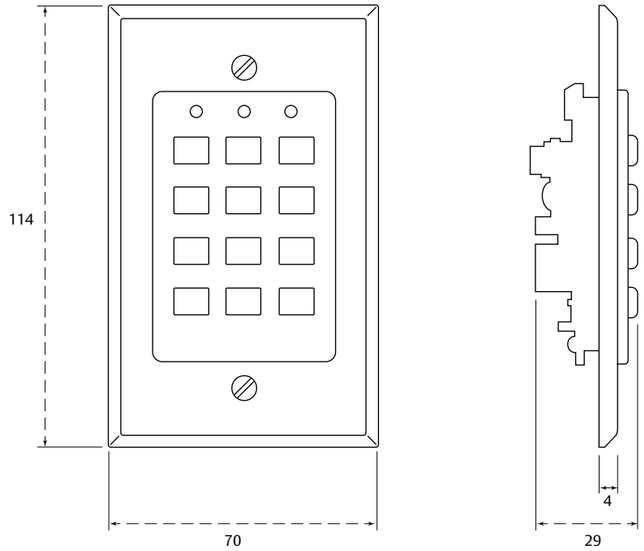

How to order

Order code	Description	Finish
DK-38W	Digital keypad for internal external applications with Wiegard output	SS

ASSA CLIQ® Remote

ASSA CLIQ® Remote is an advanced locking system designed to simplify access for single sites, as well as for businesses spread over multiple locations. It can upgrade mechanical locking systems to offer all the benefits of access control.

The system offers security locking with high-end micro-electronics, programmable keys and cylinders. Combining a cutting-edge mechanical platform with an advanced electronic function - this solution provides flexible control of keys, access rights and audit trails. Perfect for new installations but can also fit seamlessly into existing mechanical locking systems.

CLIQ® Remote offers the ability to grant keyholders, regardless of location, remote access to properties, facilities, or other assets. The intuitive online management tool makes it simple to manage access rights, enable or disable keys, access audit trails and customise timed access schedules.

Range benefits

- Electronic and mechanical combination gives the ultimate level of security
- Controlled authorisation on keys with schedules for times and days
- Customised validation periods to ensure offline security
- Audit trail traceability
- Access can be granted remotely to keyholders
- Keys can be programmed and updated individually
- Remote updates keep control at the highest level
- Quick and easy installation with no wiring

Our award winning CLIQ® Remote is a security locking system, combining a mechanical platform with advanced electronic functions.

Streamline your access control system and eliminate the problems that come with vulnerable legacy lock and key security.

Only give your employees access when they need it.

Know precisely who has accessed which door and when.

Instantly grant or block access anytime from anywhere.

Minimise the risks posed by lost or stolen keys

Control access at any time from anywhere

Boost your business' security with flexible access and key management

Minimise operational costs with wireless installation and battery-powered keys

Transition from vulnerable legacy security to audit trails and easily monitor who was where and when

Schedule access to any door or grant time-limited access

Example CLIQ® Remote system

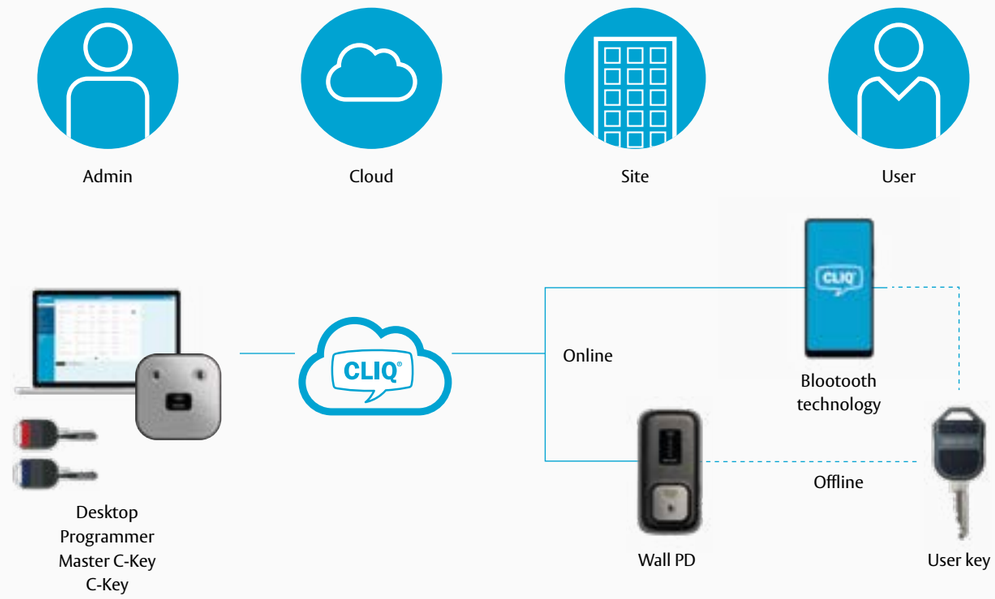

Final door interface profiles

System software

ASSA CLIQ® Remote cylinders and keys are programmed using the ASSA CLIQ® Web Manager software, an online programme that doesn't require any additional software to be installed locally.

Backed up to ASSA ABLOY's secure server, this system ensures that administrators are always working in the latest version and regular backups of the database are stored.

CLIQ® Connect is a mobile app that can be downloaded to an iOS or Android device. This can assist users in updating their access rights and is particularly suited to remote-based workers as well as benefiting sites with limited connectivity.

C-keys and master C-keys

Allows access into the administration system.

Features and benefits

- Provides access into CLIQ® Web Manager
- Allows programming of locks and access to audit trails
- Forms part of the 3-level authentication to log onto the system: CLIQ® Connect application, certificates loaded and PIN code on CLIQ® Web Manager
- Buzzer and LED notification
- The control key cannot open locks

Specification

Use	Interior and exterior use
Operating temperature	-20°C to +50°C
Battery type	CR2025 3V
Battery life	Up to 3 years

Testing and certification

UKCA / CE marked (EMC)	Yes
Certified in compliance with	EN 61 000-6-2, 3 (2019/30/EU), EN 15684
Suitable for fire doors	No
Guarantee	2 years

How to order

Please contact our sales team at **assacliqenquiries@assaabloy.com** to discuss the specification of your system.

User-keys

Allows the user to open locks where access rights have been granted.

Features and benefits

- Controlled by the administrator, through CLIQ® Web Manager, to allow or deny access
- Gives access to doors and buildings in remote locations
- Option to grant access at specific times
- Fast re-programming and deletion of keys
- High levels of security combining mechanical and electromechanical safety in one key
- Bluetooth key option, for updating via CLIQ® Connect app
- Available with built-in RFID chip
- Long battery life

Specification

Use	Interior and exterior use
Operating temperature	-20°C to +50°C
Battery life	Standard key – approimatly 8 years with CR2330, 10 years with CR2354 Note – CR2354, cannot be used if RFID within key

Testing and certification

UKCA / CE marked (EMC)	Yes
Certified in compliance with	EN 61 000-6-2, 3 (2019/30/EU), EN 15684
Suitable for fire doors	No
Guarantee	2 years

How to order

Please contact our sales team at **assacliqenquiries@assaabloy.com** to discuss the specification of your system.

Desktop programming device

Communication interface for secure access and data transmission between CLIQ® Web Manager and authorised administrators.

Features and benefits

- The unit can read the event log from a CLIQ® key
- Sends programming tasks to the C-key as well as program CLIQ® keys locally
- USB powered

Specification

Use	Interior use
Operating temperature	-40°C to + 80°C
Battery life	USB 2.0 Micro-A
Dimensions (H x W x D)	100 x 100 x 54mm
Finish	SIL

Testing and certification

UKCA / CE marked (EMC)	Yes
Certified in compliance with	EN 61 000-6-2, 3
Suitable for fire doors	No
Guarantee	2 years

How to order

Please contact our sales team at **assacliqenquiries@assaabloy.com** to discuss the specification of your system.

Wall programming devices (interior and exterior)

Units that are fitted locally to conveniently allow users to plug their key into to receive updates and validations.

Features and benefits

- Used in conjunction with CLIQ® Remote
- Hardwired connection required to receive updates from CLIQ® Web Manager
- The internal wall PD is made from rigid plastic
- The external wall PD is vandal resistant and made from steel
- LAN connection
- Speakers provide audio signals
- LED interface (6pcs) provides visual data transfer confirmation
- Plug and play capability

Specification

Use	Interior and exterior use. IP42 rated for internal version, IP57 rated for external version, IK9 attack resistance for external version
Operating temperature	-40°C to + 80°C
Power	PoE (Power over Ethernet) or 12-24V
Dimensions (H x W x D)	Surface mounting bracket: 89 x 170 x 41 mm, Flush mounting: 86 x 167 x 25 mm
Finish	Internal – BLK, external – SS

Testing and certification

UKCA / CE marked (EMC)	Yes
Certified in compliance with	EPD – as per ISO 14025 and EN 15804
Suitable for fire doors	No
Guarantee	2 years

How to order

Please contact our sales team at **assacliqenquiries@assaabloy.com** to discuss the specification of your system.

Bluetooth programming and BLE key

Receive updates and validation data direct from your smart device for the ultimate remote solution which conveniently allow users to update on the go.

Features and benefits

- Compatible with Android and iOS devices
- Compatible with dp and Triton ranges
- Provides the ability to validate keys without a network connection
- Low energy product
- All the standard key functions

Specification

Use	Interior and exterior use
Operating temperature	-20°C to +50°C
Battery life	BLE key – Approx. 2 years, CR2330, 3 years with CR2354

Testing and certification

UKCA / CE marked (EMC)	Yes
Certified in compliance with	EN 61 000-6-2, 3, EN 15684
Suitable for fire doors	No
Guarantee	2 years

How to order

Please contact our sales team at **assacliqenquiries@assaabloy.com** to discuss the specification of your system.

Cylinder range

Large range of shapes and sizes of cylinders, padlocks and cam locks available, including Euro, Scandinavian, oval and rim.

Features and benefits

- Triple layered security, combining standard mechanical cuts and sidebars with CLIQ® technology, to create the ultimate high security platform
- Easy to retrofit CLIQ® cylinders to upgrade existing hardware to include powerful scheduling and accountability
- Meets high standards in both UK and EU testing

Specification

Use	Interior and exterior use
Tested to	100,000 cycles
Finish	SC (PB available on request)

Testing and certification

UKCA / CE marked (EMC)	Yes
Certified in compliance with	EN 1303, EN 60529 & EN60529 /A1:2000, SSF 014 – Class 3 and 4, EPD- as per ISO 14025, EN 15804, EN 15684
Suitable for fire doors	Timber FD30/FD60, metal FD120
Guarantee	2 years

How to order

Please contact our sales team at **assacliqenquiries@assaabloy.com** to discuss the specification of your system.

Padlocks

A comprehensive range of high grade padlocks.

Features and benefits

- Ruko range of padlocks conform to EN 12320 security grade 3 to 6
- IP68 rated weatherproof padlocks conform to EN 12320 security grade 3 to 5
- Different security grades available
- Can be programmed for timed entry
- Audits available from padlocks

Specification

Use	Interior and exterior use
Tested to	100,000 cycles
Finish	SSS

Testing and certification

UKCA / CE marked (EMC)	Yes
Certified in compliance with	EN 12320, EN 60529, EN 60529 /A1:2000, SSF 014 – Class 3 and 4, EN 15684
Guarantee	2 years

How to order

Please contact our sales team at **assacliqenquiries@assaabloy.com** to discuss the specification of your system.

Electric solenoid bolts

Electric solenoid bolts are designed to offer electronic locking for a door. The bolt is electronically driven into the strike to prevent the door from opening. Similarly, the bolt is retracted to allow the door to be opened. They are often used in applications where an electric strike is impractical, for example on swing-through or double action doors and commonly offer greater aesthetic appearance.

Our range consists of multiple high security options and, depending on the model, can give up to 1,000kg holding force.

Range benefits

- Ideal for applications where an electric strike is impractical
- High security offering high holding forces
- Power to lock or power to open
- Bolt position – monitoring of both door and bolt positions
- Door position monitor with integrated magnet into the strike plate (no need to install a separate reed switch)
- Intelligent bolts will attempt to re-close the bolt 8 times, allowing time for swing through doors to settle in the closed position
- Tamper proof locks cannot be defeated by slipping a metal object between lock and striker plate
- Thermal protection in the event of solenoid overheat, a thermal fuse will operate, eliminating any fire risk
- Multiple orientation, drop bolts will work horizontally or vertically

ASSA ABLOY
Opening Solutions

TB25

High quality, high security drop bolt for use on swing-through and double action doors, where an electric strike is impractical.

Features and benefits

- Bolt is deadlocked in the extended position for high security
- Tamper proof lock that can't be defeated by slipping a metal object between lock and strike plate
- 1,000kg extreme strength holding force
- Streamlined design measuring only 25mm wide
- Bolt and door position monitored with integrated magnet into the strike plate which removes the need to install a separate reed switch
- Multiple orientation, drop bolts will work horizontally or vertically
- Intelligent electronics attempt to re-close the bolt 8 times, allowing time for swing through doors to settle in the closed position
- Thermal protection eliminates the risk of fire in the event of the solenoid overheating

Testing and certification

UKCA / CE marked (EMC)	Yes
Certified in compliance with	EN 61000-6-1, EN 61000-6-3 and RoHS Directive 2011/65/EU
Suitable for fire doors	No
Guarantee	5 years

Specification

Holding force	1,000kg (2204lbs)
Use	Interior and entrance doors
Current draw	Start: 1100mA @ 12Vdc – 1000A @ 24Vdc Holding: 210mA @ 12Vdc – 90mA @ 24Vdc
Voltage tolerance	12 to 24V DC
Solenoid	Rated for continuous use
Monitoring	Bolt and door position
Duty	Fail safe or fail secure options
Tested to	1,000,000 cycles
Dimensions (H x W x D) case	163 x 22 x 38mm
Dimensions (H x W x D) faceplate	210 x 25 x 3mm
Dimensions (Diameter x projection) bolt	12.7 x 16mm
Finish	SS
Accessories	See electromagnetic accessories section for items such as EB25 short strike plate, EB25 long strike plate, EB25 housing, EB25 dress plate, TB25 dress plate kit, TB25 surface mount kit

Dimensions

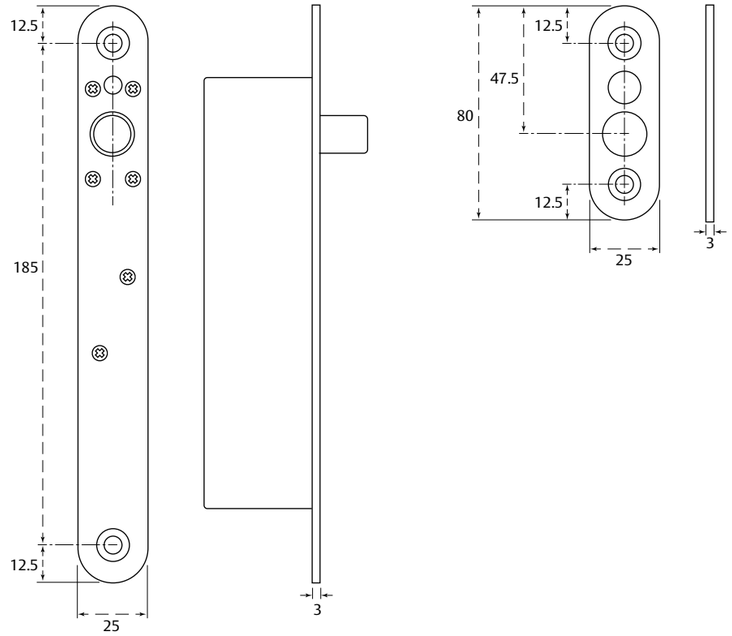

How to order

Order code	Description	Finish
118251-000	TB25 PTL dropbolt rounded faceplate, rounded strike, round strike hole	SS
118252-000	TB25 PTO dropbolt rounded faceplate, rounded strike, round strike hole	SS
188251-010	TB25 PTL rounded faceplate, rounded strike, square strike hole	SS

TB25KO

High quality, high security drop bolt which includes a unique mechanical override in the event of power failure. Designed for use on swing-through and double action doors, where an electric strike is impractical.

Features and benefits

- Unique mechanical override within integrated Euro profile cylinders for power to open applications, if power failure occurs
- Bolt is deadlocked in the extended position for high security
- Tamper proof lock that can't be defeated by slipping a metal object between lock and striker plate
- 1,000kg extreme strength holding force
- Continuously rated solenoid
- Bolt and door position monitored with integrated magnet into the strike plate which removes the need to install a separate reed switch
- Multiple orientation, drop bolts will work horizontally or vertically
- Intelligent electronics attempt to re-close the bolt 8 times, allowing time for swing through doors to settle in the closed position
- Thermal protection eliminates the risk of fire in the event of the solenoid overheating settle in the closed position

Testing and certification

UKCA / CE marked (EMC)	Yes
Certified in compliance with	EN 61000-6-1, EN 61000-6-3 and RoHS Directive 2011/65/EU
Suitable for fire doors	No
Guarantee	5 years

Specification

Holding force	1,000kg (2204lbs)
Use	Interior and entrance doors
Current draw	Start: 1100mA @ 12Vdc – 1000A @ 24Vdc Holding: 210mA @ 12Vdc – 90mA @ 24Vdc
Voltage tolerance	12 to 24V DC
Solenoid	Rated for continuous use
Monitoring	Bolt, door and key
Duty	Fail safe or fail secure options - factory pre set
Tested to	1,000,000 cycles
Dimensions (H x W x D) case	227 x 22 x 33mm
Dimensions (H x W x D) faceplate	280 x 25 x 3mm
Dimensions (Diameter x projection) bolt	12.7 x 16mm
Finish	SS
Accessories	N/A

Dimensions

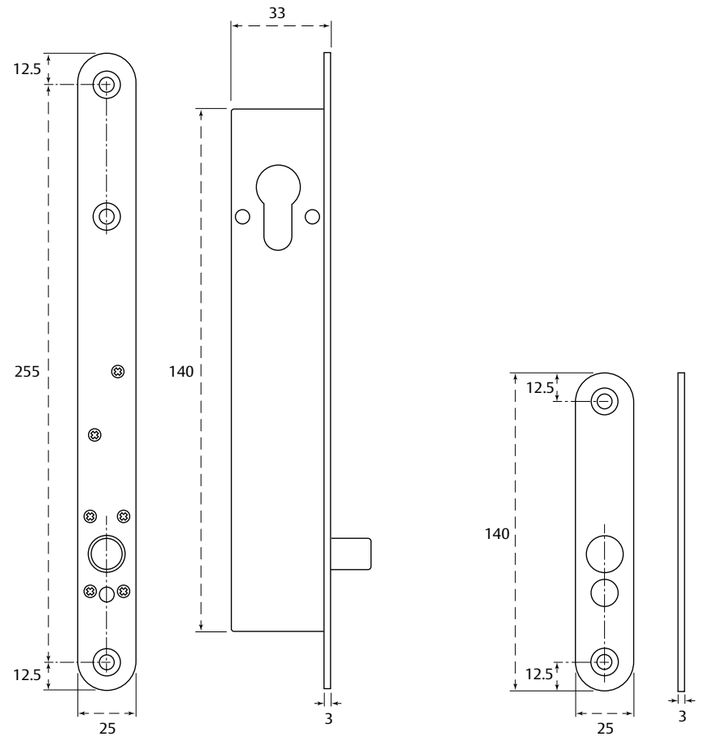

How to order

Order code	Description	Finish
118251-500	TB25KO PTL dropbolt	SS
118252-500	TB25KO PTO dropbolt	SS

Speciality electric locking solutions

We offer a range of speciality electronic locking solutions for a variety of different applications. Our collection includes four types of specialty electric locks:

Gate locks

Specialist electric gate locks designed for external applications where weather resistance and security are a priority.

Specialist bolts and strikes

Electric bolts and strikes designed for specialist applications.

Electric cabinet locks

Designed for cabinets and can be integrated into an access control system or operated by a keypad.

Dual action electromagnetic and electromechanical

Designed for applications where a strong holding force is required.

Range benefits

- Unique electromechanical locking solutions
- Variety of applications – gates, jewellery cases etc.
- Locking solutions can be integrated to any access control system

GL1

Heavy duty electromechanical gate lock that provides high holding forces and weather-resistant access control, for a wide range of gate applications.

Features and benefits

- Unrivalled MagnaCare® no-fault, no questions asked lifetime warranty
- 907kg high strength holding force
- Operates under preload up to 45kg
- Surface mounted
- Self-aligning receiver helps compensate for gate misalignment and sag
- Automatic dual-voltage configuration with no field adjustment required
- Tamper resistant cast housing for attack resistance
- Optional latch status monitor
- Accepts a standard mortice cylinder with Adams Rite MS cam for manual key override (not included, see spacer guide overleaf)

Testing and certification

UKCA / CE marked (EMC)	Yes
Certified in compliance with	EN 61000-6-1, EN 61000-6-3, ANSI/UL294
Suitable for fire doors	No
Guarantee	Lifetime

Specification

Holding force	907kg (2000lbs)
Use	Interior and exterior use
Operating temperature	-50 to +75°C
Current draw	870mA (peak for 1 second) then reduced to 290mA at 12V DC 720mA (peak for 1 second) then reduced to 170mA at 12V DC
Dimensions (H x W x D) body	184 x 69 x 81mm
Dimensions (H x W x D) bracket	71 x 70 x 54mm
Finish	BLK
Accessories	N/A

Dimensions

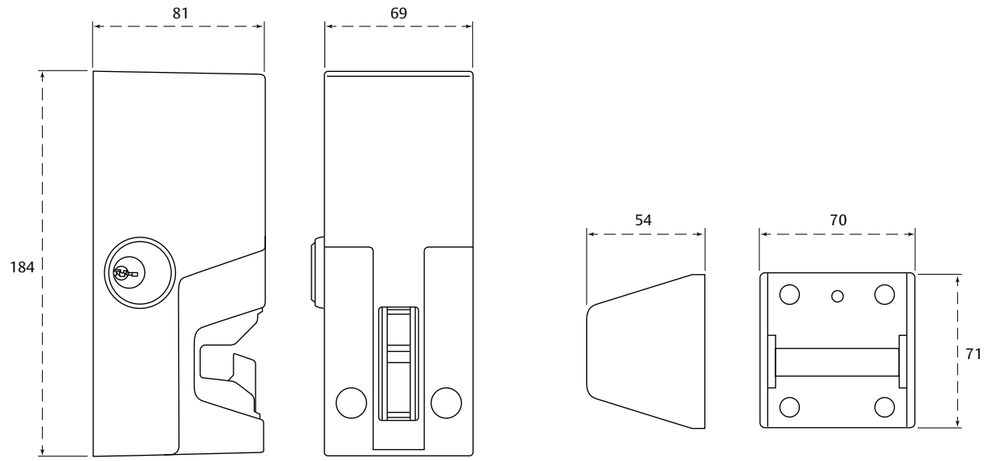

Mortice spacer guide

Cylinder length	Spacer required (by others)
25.4mm	6.35mm
28.5mm	9.5mm
31.75mm	12.7mm

How to order

Order code	Description	Finish
GL1-FLM	GL1 gate lock fail secure and monitored	BLK
GL1-FSM	GL1 gate lock fail safe and monitored	BLK

ASSA ABLOY
Opening Solutions

M62FG

The only heavy-duty electromagnet specifically designed to secure and protect gates. Includes a uniquely designed shock absorbing strike mount, which prolongs the life of the electromagnet.

Features and benefits

- Ideal for areas prone to excessive force closures or slamming
- Special shock absorbing strike mount dramatically prolongs the life of the lock, the gate and other hardware
- Unrivalled MagnaCare® no-fault, no questions asked lifetime warranty
- 544kg high strength holding force
- Automatic dual-voltage configuration with no field adjustment required
- Patented instant release circuit eliminates residual magnetism, for easy opening and closing
- Automatic dual-voltage configuration with no field adjustment required
- Fully sealed tamper proof and weather resistant electronics
- Flexible bracket options for swinging or sliding applications
- Noise suppression with built-in MOV

Specification

Holding force	544kg (1200lbs)
Use	Indoor and outdoor use
Operational temperature range	-40 to +60°C
Current draw	250mA at 12V DC and 150mA at 24V DC
Dimensions (H x W x D) magnalock	203 x 76 x 44mm
Dimensions (H x W x D) plate	152 x 70 x 12mm
Conductor cable	10 ft. [3.05m] of jacketed, stranded
Finish	SSS
Accessories	N/A

Dimensions

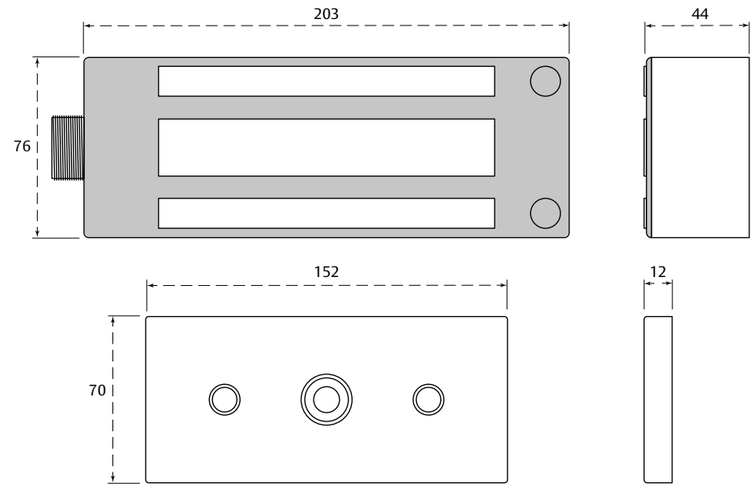

Testing and certification

UKCA / CE marked (EMC)	Yes
Certified in compliance with	EN 61000-6-1, EN 61000-6-3, ANSI/UL294
Suitable for fire doors	No
Guarantee	Lifetime

How to order

Order code	Description	Finish
M62FGBM	M62FGB magnalock- 12/24 VDC, face drilled, gate conduit, bondstat 544kg (1200lbs)	SSS
M62FGM	M62FG magnalock- 12/24 VDC, face drilled, gate conduit 544kg (1200lbs)	SSS
M62FBM	M62FB magnalock- 12/24 VDC, face drilled, bondstat 544kg (1200lbs)	SSS

ASSA ABLOY
Opening Solutions

ES8000

A high torque motorised bolt that moves from the vertical position to the horizontal state when locked. The bolt moves into the V shaped strike plate pulling the door aligned with the lock.

Features and benefits

- Includes the world's first fail-open motor locking mechanism which eliminates the need and cost of an additional key override function
- Pre-load capable lock will unlock with up to 15kg of side pressure, when wired in 3 wire mode
- Significant 7mm (+/- 3.5mm) overall door misalignment tolerance for easy installation
- Slim design with classic satin stainless steel faceplate for great aesthetic look
- Can be installed vertically or horizontally, concealed from view or surface mounted for flexible installation options
- For exterior doors where water ingress is likely the ES8000 must be mounted horizontally
- Designed for misaligned, timber and glass doors
- High torque motorised locking and unlocking (3 wire mode)
- High speed operation which unlocks in less than 1 second
- Surface mount accessory kit ideal for 180°swing through glass doors

Classification code

3	X	9	F	-	H	4	0	3
(1-3)	(A-Y)	(1-9)	(0-F)	(NPD)	(0-P)	(0-7)	(0-1)	(0-3)

EN14846:2008

UK CA CE 5 YEAR GUARANTEE 1000 kg HOLDING FORCE

Testing and certification

UKCA / CE marked (fire)	Yes
UKCA / CE marked (EMC)	Yes
Certified in compliance with	PAS24, EN 1634-1, EN 61000-6-3 and EN 50130-4:2011 + A1:2014
Suitable for fire doors	Yes
Guarantee	5 years

Specification

Holding force	1,000kg (2204lbs) (with supported strike plate)
Preload	Motorised unlocking maximum 15kg at bolt
Use	Interior and entrance doors
Operational temperature range	-20° to +60°C
Current draw	Minimum 1A regulated supply
Voltage tolerance	12 to 24V DC
Monitoring	COM, NO, NC voltage free changeover contacts rated at 48 dc/100mA)
Duty	Fail safe or fail secure
Tested to	500,000 cycles
Dimensions (H x W x D) body	210 x 24 x 42mm
Dimensions (H x W x D) faceplate	256 x 30 x 3mm
Dimensions (diameter x projection) bolt	11 x 20.5mm
Finish	SSS
Accessories	See electromagnetic accessories section for items such as glass door kit and intumescent kits

Dimensions

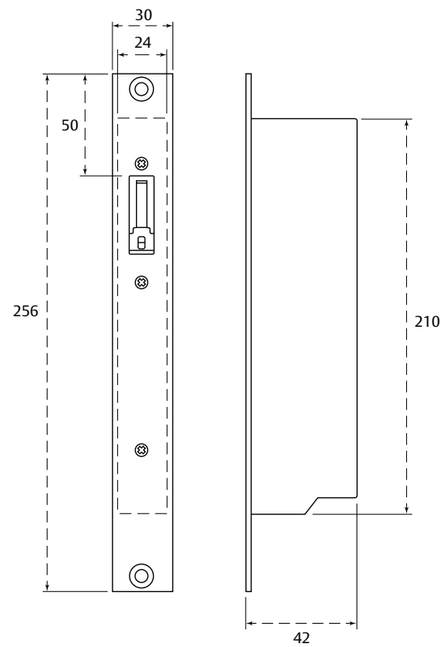

How to order

Order code	Description	Finish
118001-010	ES8001-TBAS V-lock 12-24VDC fail safe monitored	SSS
118002-010	ES8002-TBAS V-lock 12-24VDC fail secure monitored	SSS

ES6000

Heavy duty hook lock with high pre-load capability, for swinging and sliding doors, and can easily be attached to wooden or steel door frames.

Features and benefits

- Pre-load capable lock which operates freely with up to 300kg of side pressure
- 680kg high strength holding force
- Low profile which only protrudes 40mm into the door headroom
- Available in both recess and surface mounted versions
- Can be installed vertically and horizontally
- Will self-latch without power for fire applications

Testing and certification

UKCA / CE marked (EMC)	Yes
Certified in compliance with	UL1034 (highest level), EN 61000-6-3 and EN 50130-4:2011 + A1:2014
Suitable for fire doors	No
Guarantee	5 years

Specification

Holding force	680kg (1500lbs) (with supported strike plate)
Preload	300kg
Use	Interior and entrance doors
Operational temperature range	-20° to +60°C
Current draw	12VDC- 250mA after 1 second (initial current 830mA) 24VDC- 140mA after 1 second (initial current 530mA)
Voltage tolerance	12 to 30V DC with back EMF protection and reverse polarity protection
Monitoring	Fail safe or fail secure status
Duty	Fail safe
Tested to	2,000,000 cycles
Dimensions (H x W x D) mortice body	200 x 42 x 53mm
Dimensions (H x W x D) mortice faceplate	258.5 x 52 x 3mm
Dimensions (H x W x D) surface body	200 x 56 x 41mm
Finish	Recess mounted version - SS Surface mounted version - CA
Accessories	N/A

Dimensions

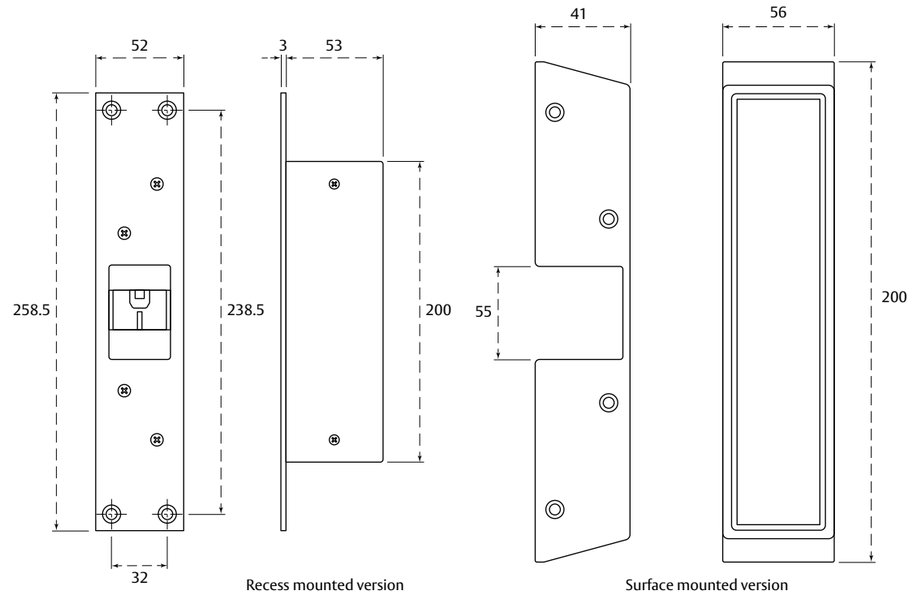

How to order

Order code	Description	Finish
116001-000	ES6001M TFAS fail safe mortice mounted	SS
116001-010	ES6001S TA fail safe surface mounted	CA
116002-000	ES6002M TFAS fail secure mortice mounted	SS
116002-010	ES6002S TA fail secure surface mounted	CA

EL110

A compact, robust and cost-effective cabinet lock for swing or sliding cabinet doors.

Features and benefits

- 150kg low strength holding force
- Surface mounted either vertically or horizontally, offering maximum flexibility for ease of installation
- 5mm vertical / horizontal of flexible alignment adjustment after installation
- Controlled by any existing access control system or simply controlled through a remote keypad or key switch
- Configured to set up to either fail safe or fail secure on site, for flexibility
- Low current consumption
- Self-latching in fail secure mode

5 YEAR GUARANTEE

150 kg HOLDING FORCE

Testing and certification

UKCA / CE marked (EMC)	N/A
Certified in compliance with	No
Suitable for fire doors	No
Guarantee	5 years

Specification

Holding force	150kg (330lbs)
Use	Interior use
Operational temperature range	-20° to +60°C
Current draw	187mA @ 12V DC and 87mA @ 24V DC
Voltage tolerance	12 to 24V DC
Solenoid	Rated for continued use
Monitoring	No
Duty	Fail safe or fail secure changeable on site
Tested to	1,000,000 cycles
Dimensions (H x W x D) body	55 x 30 x 37mm
Finish	CA
Accessories	N/A

Dimensions

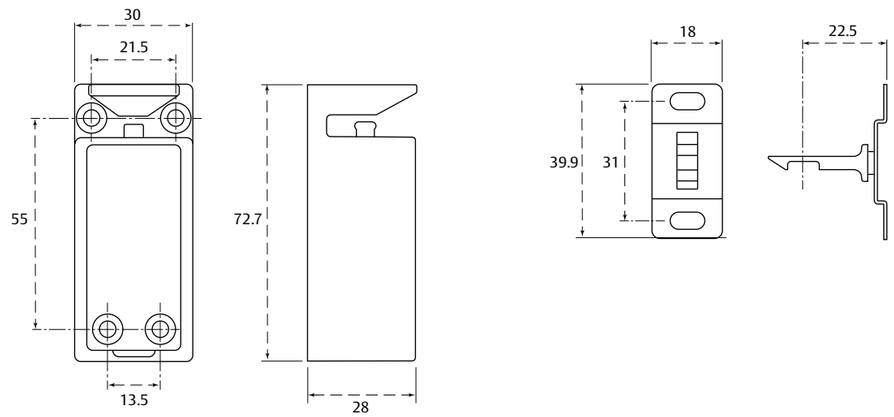

How to order

Order code	Description	Finish
111301-000	EL111-T 12VDC fail safe cabinet lock	CA
111302-000	EL112-T 12VDC fail secure cabinet lock	CA
111304-000	EL114-T 24VDC fail secure cabinet lock	CA

1048 and 1049

Electric cabinet lock, which can be fitted as a stand-alone lock controlled by a key switch, or a remotely operated control device that can lock or unlock multiple cabinets simultaneously.

Features and benefits

- Suitable for both sliding drawers and hinged doors (with minimum 250mm distance from hinges to position of lock rosette)
- Supplied with locking element (fitted to frame) and rosette (fitted to door), plus screws and washers
- Designed to standard 32mm grid size for ease of fitting
- 1048 snaps open when the door is unlocked, for cabinets with no external handle fitted
- 1049 can be set up either fail safe or fail secure
- Versions with microswitch available to monitor bolt status

1 YEAR GUARANTEE

Testing and certification

UKCA / CE marked (EMC)	N/A
Certified in compliance with	No
Suitable for fire doors	No
Guarantee	1 year

Specification

Holding force	102kg (225lbs)
Use	Interior use IP20
Operational temperature	-20ºC to +60ºC
Current draw	200mA @ 12Vdc – 120mA @ 24Vdc
Voltage tolerance	12 or 24V DC
Monitoring	Optional microswitch to monitor bolt
Duty	1048 - fail secure only 1049 - fail safe or fail secure
Dimensions (H x W x D) body	48 x 42 x 20mm
Finish	Black
Accessories	N/A

Dimensions

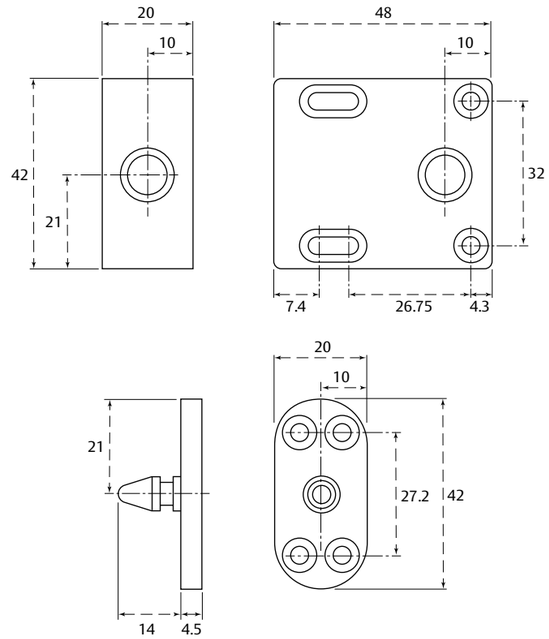

How to order

Order code	Description	Finish
50902000000	1048 electric cabinet lock, impulse	BLK
50902100000	1048BS electric cabinet lock, monitored	BLK
50901600000	1049BS electronic cabinet lock, monitored	BLK

MM15DT

Extreme strength magnetic electromechanical lock with unique hybrid design, that offers unmatched resistance in a forced-entry assault.

Features and benefits

- Unrivalled MagnaCare® no-fault, no questions asked lifetime warranty
- 1,814kg extreme strength holding force provides an unmatched level of security
- Unique hybrid jaw design includes two spring loaded, hardened steel jaws clamp down on the armature plate for ultimate holding power
- Efficient and low power usage
- Automatic dual-voltage configuration with no field adjustment required
- Supplied with mounting plate providing easy and accurate installation
- Ultra-secure collapsing blind nuts mount to door frame for strength and reliability
- Size optimised for door closers
- Door position switch and anti-tamper switch
- Ideal for mental healthcare and auxiliary detention facilities and other high-risk locations

Testing and certification

UKCA / CE marked (EMC)	Yes
Certified in compliance with	EN 61000-6-1, EN 61000-6-3
Suitable for fire doors	No
Guarantee	Lifetime

Specification

Holding force	1,814kg (4000lbs)
Use	Interior and entrance doors
Operational temperature range	-40° to +60°C
Current draw	AC Current: 130 mA at 12V AC and 250 mA at 24V AC DC Current: 100 mA at 12V DC and 200 mA at 24V DC
Voltage tolerance	12 or 24V DC
Monitoring	DPS
Duty	Fail safe but can be installed with battery back-up supply
Dimensions (H x W x D) body	48 x 152 x 70mm
Finish	SS
Accessories	N/A

Dimensions

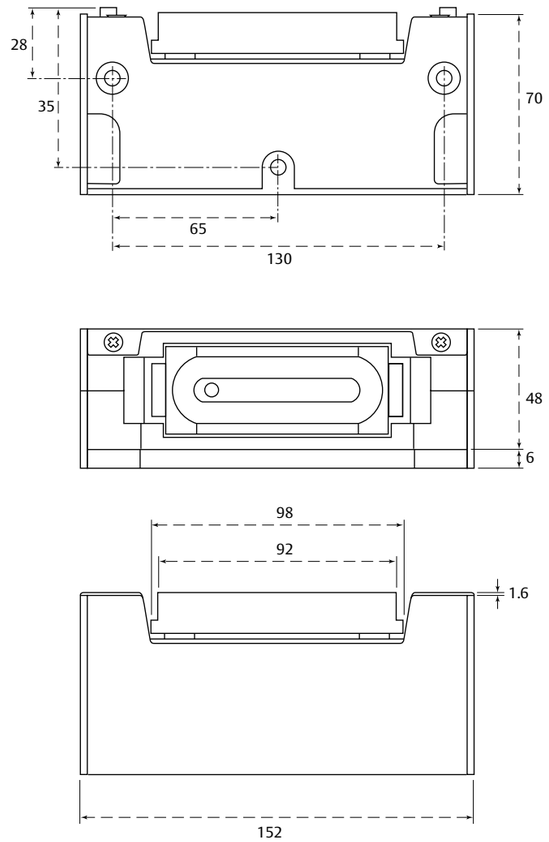

How to order

Order code	Description	Finish
MM15DT	Maglock with integrated door position and anti-tamper switch	SS

Electric strikes

Electric strikes are one of the most popular ways of electrically unlocking a door as part of an access control system.

An electrically controlled solenoid temporarily releases the jaw, allowing doors to be opened by manual action. When the door closes, the solenoid relocks the jaw, securing the door.

Available as mortice or rim mount models, electric strikes work in conjunction with the majority of popular mortice or rim nightlatches.

For security, normally the latch would have a deadlocking facility. The deadlocking snib, resting against the strike plate, stops the latchbolt from being forced back into its case. This offers extra protection when a strike is fitted to an outward opening door.

Range benefits

- Medium to high security strikes for all specifications
- Suitable for a wide range of door materials and door types including fire doors
- Extension lip available for centrally hung aluminium doors to avoid interference from the frame
- Complies with relevant security requirements and performance standards
- Easy to install and can be retrofitted into existing applications
- Suitable for inward and outward opening doors

Considerations for selecting the right electric strike

1. Assess the type of frame:

- Material – is your door hollow aluminium, metal or wood?
- Door health – can any door or frame irregularities be fixed prior to installation of electric strike?

2. Determine if the door assembly has special requirements:

- Does it need a fire rating?
- Is the door subject to high winds or direct rain?
- Is it an interior or exterior door?
- Does it require pre-load?
- Is the door opening outward or inward?

3. Identify and test existing door hardware:

- Existing locking hardware determines the compatible electric strike and overall function of the opening
- Make sure existing hardware works properly and is not broken or damaged

Electric strike selection guide

Strike	7400 / 7401	ES110	ES2100	ES2600	ES9000	14E/514E	14A/ 5114A
Brand	Adams Rite	Trimec	Trimec	Trimec	Trimec	ASSA	ASSA
Holding force	680kg (1500lbs)	680kg (1500lbs)	1000kg (2204lbs)	650kg (1433lbs)	1300kg (2866lbs)	450kg (992lbs)	450kg (992lbs)
Pre/Side load	15kg	-	-	-	25kg	-	-
Duty	PTL/PTO	PTL/PTO	PTL/PTO selectable	PTL/PTO selectable	PTL/PTO selectable	PTO	PTL
Monitoring	Optional	-	Yes	Yes	Yes	Optional	Optional
Guarantee	3yrs	5yrs	5yrs	5yrs	5yrs	5yrs	5yrs
Voltage	12/24v	12/24v	Multi voltage	12/24v	Multi voltage	12v	12v
Weather rating	-	IP56	-	-	IP54	-	-
Special feature	Side load	IP56	Variable voltage	Surface mount, suits panic bars	High security	Optional faceplates	Optional faceplates

Strike	900	910	911	920	960	961	ES150
Brand	ASSA	ASSA	ASSA	ASSA	ASSA	ASSA	Trimec
Holding force	600kg (1322lbs)	700kg (1543lbs)	700kg (1543lbs)	1000kg (2204lbs)	1000kg (2204lbs)	1000kg (2204lbs)	680kg (1500lbs)
Pre/Side load	12kg	12kg	12kg	12kg	200kg	200kg	-
Duty	PTL/PTO	PTO	PTL	PTO	PTO	PTL	PTL/PTO selectable
Monitoring	Optional	Optional	Optional	Optional	Yes	Yes	No
Guarantee	5yrs	5yrs	5yrs	5yrs	5yrs	5yrs	5yrs
Voltage	12/24v	12/24v	12/24v	12/24v	12/24v	12/24v	12/24v
Weather rating	-	-	-	-	-	-	IP56
Special feature	EMF protection	EMF protection	EMF protection	High holding force/FD60M	High pre/side load/FD60M	High pre/side load	Surface or rim mount/ IP56

ASSA ABLOY
Opening Solutions

7400 & 7401 series

High quality, high security electric strikes purposely designed for aluminium, single or double doors.

Features and benefits

- Innovative and compact stainless steel split jaw maintains a high level of security
- Jaw electrically opens with 25kg side load pressure placed upon it
- Adjustable jaw allows easy adjustment and alignment with latchbolt, on site
- Set to either fail safe or fail secure mode, for on-site flexibility
- 7400 with flat faceplate, 7401 with radius faceplate
- Single solenoid offers dual voltage and operates at 12/24V DC
- Double monitoring option indicates the latchbolt engagement and jaw status, to confirm if the door is both locked and closed
- Purposely designed to work with Adams Rite deadlatches
- Sub covers available for a tidy installation
- Door cover available to simplify the mortice preparation

Testing and certification

UKCA / CE marked (EMC)	Yes
Certified in compliance with	EN 61000-6-1, EN 61000-6-3, ANSI/BHMA 156.5 Grade 1 UL listed for burglary resistance
Suitable for fire doors	No
Guarantee	3 years

Specification

Holding force	680kg (1500lbs)
Use	Interior and entrance doors
Voltage tolerance	+/- 10%
Monitoring	Latch and solenoid (optional)
Duty	Fail safe or fail secure, changeable on site
Dimensions (H x W x D) case	85.6 x 36 x 27mm
Mechanism	Zinc aluminium alloy
Dimensions (H x W) faceplate	Flat and radius aluminium - 123.7 x 31.8mm
Finish	SAA
Door gap	Minimum 3mm, operational gap 3-5mm
Sub cover	For a 44mm thick door that closes flush with jamb edge
Accessories	See electromagnetic accessories section for items such as sub cover extensions and door covers; also see Activation devices and power supplies for other related hardware

Dimensions

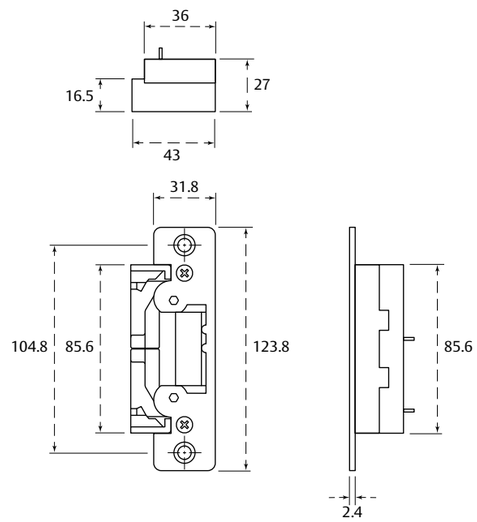

How to order

Order code	Description	Finish
7400-628	12/24V DC electric strike flat face plate with radius corners	SAA
7400M628	12/24V DC electric strike flat face plate with radius corners and double monitoring	SAA
7401-130	12/24V DC electric strike radiused face plate with radiused corners	SAA
7401M130	12/24V DC electric strike radiused face plate with radiused corners and double monitoring	SAA

ASSA ABLOY
Opening Solutions

ES110 series

A cost effective and robust electric strike, offering a high level of security and reliability.

Features and benefits

- Robust solid one-piece cast aluminium body, with a stainless steel striker and locking pins for extra strength and durability
- Works with a wide range of locks due to deeper than normal strike area
- Can be set up to fail safe or fail secure on site, for flexibility
- Suitable for 18mm latch
- Extension lips available to enable installation on door frames with different thicknesses
- Optional mounting kit available

UK CA CE 5 YEAR GUARANTEE 680 kg HOLDING FORCE

Testing and certification

UKCA / CE marked (EMC)	Yes
Certified in compliance with	EN 61000-6-1, EN 61000-6-3, UL1034 (highest level)
Suitable for fire doors	No
Guarantee	5 years

Specification

Holding force	680kg (1500lbs) static strength rating
Use	Interior and entrance doors Weather resistant construction available (IP56)
Operating temperature	-20°C to + 60°C
Current draw	243 mA @ 12Vdc - 187mA @ 24Vdc
Voltage tolerance	12 and 24v DC
Solenoid	Rated for continuous use
Monitoring	No
Duty	Fail safe or fail secure, changeable on site
Tested to	1,000,000 cycles
Dimensions (H x W x D) case	86 x 43 x 30mm
Mechanism	Stainless steel
Dimensions (H x W x D) faceplate	123.7 x 32 x 3mm (ANSI short) 201.6 x 36.3 x 3mm (ANSI long)
Finish	SS
Door gap	3mm
Accessories	See electromagnetic accessories section for items such as extension lip, mounting kit and faceplates

Dimensions

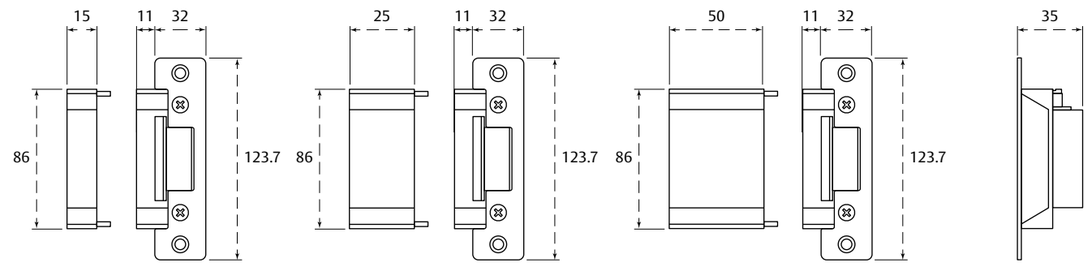

How to order

Order code	Description	Finish
110111-060M	ES110 strike 12/24VDC PTL faceplate short-A/long-H	SS
110111-150M	ES110 strike 12/24V DC PTL faceplate H-square corner-lipless	SS
110111-160M	ES110 strike 12/24VDC PTL faceplate H-SQ-CRN/LongH	SS
110111-190M	ES110 strike 12/24DC PTL faceplate short-A/long-H lipless	SS
110112-060M	ES110 strike 12/24VDC PTO faceplate short-A/long-H	SS
110112-140M	ES110 strike 12/24V DC PTO faceplate H-square corners	SS

ASSA ABLOY
Opening Solutions

ES2100 series

A fully monitored electric strike for high traffic areas that require additional door position monitoring.

Features and benefits

- Durability tested to 1,500,000 cycles
- Superior strength with a static holding force of 1,000kg
- Full door monitoring via door position switch, latch and solenoid positions
- Patented way of setting up to fail safe or fail secure on site, for flexibility
- Unique integrated door position switch
- Variable voltage 10 - 30v DC
- Extension lips available to enable installation on door frames with different thicknesses
- Mounting tabs supplied as standard for easier installation

Testing and certification

UKCA / CE marked (EMC)	Yes
Certified in compliance with	EN 61000-6-3:2007 + A1:2011 + AC:2012 and EN 50130-4:2011 + A1:2014
Suitable for fire doors	No
Guarantee	5 years

Specification

Holding force	1,000kg (2204lbs)
Use	Interior and entrance doors
Operating temperature	-20°C to + 60°C
Current draw	200mA @ 12Vdc – 120mA @ 24Vdc
Voltage tolerance	Variable 10 - 30v DC
Solenoid	Rated for continuous use
Monitoring	Door position (reed switch), solenoid locked and latch position
Duty	Fail safe or fail secure, changeable on site
Tested to	1,500,000 cycles
Dimensions (H x W x D) case	123 x 29 x 24.5mm
Mechanism	Stainless steel
Dimensions (H x W) faceplate	176 x 29 x 2mm
Faceplate finish	SS/BLK
Door gap	Suitable for 15mm latchbolt with 3mm door gap
Accessories	See electromagnetic accessories section for items such as extension lip

Dimensions

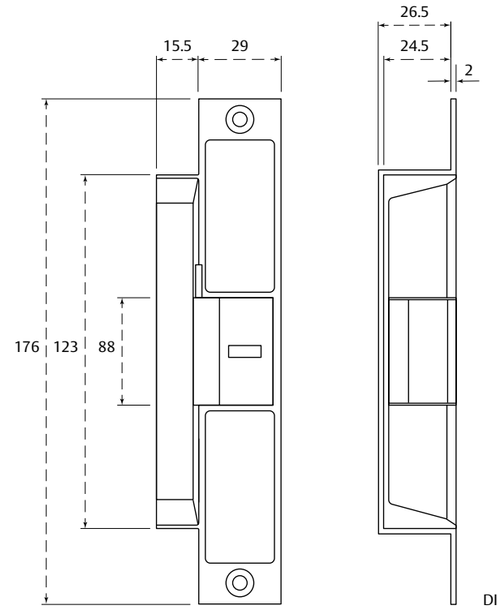

DIM shown for 12100-000

How to order

Order code	Description	Finish
112100-000	ES2100 multifunction strike 10-30VDC - C/W lip extension holes	SS/BLK
112100-010	ES2100 multifunction strike 10-30VDC no lip	SS/BLK
112100-020	ES2100 multifunction strike 10-30VDC 8mm lip - no extension lip holes	SS/BLK

ASSA ABLOY
Opening Solutions

ES2600 series

Surface mounted electric strike designed to be used with panic bars fitted to emergency doors.

Features and benefits

- Converts exit only doors, with pullman type latches, into a fully access controlled door
- Fully monitored with solenoid and door/latch monitoring functions
- Fail safe or fail secure, changeable on site
- Works in both 12 and 24V DC
- Saves energy with low current consumption, max 175Ma @ 12Vdc
- Continuously rated solenoid

Testing and certification

UKCA / CE marked (EMC)	Yes
Certified in compliance with	EN 61000-6-1, EN 61000-6-3, UL1034 (highest level)
Suitable for fire doors	No
Guarantee	5 years

Specification

Holding force	650kg (1433lbs)
Use	Interior and entrance doors
Operating temperature	-20°C to + 60°C
Current draw	175mA @ 12Vdc -88mA @ 24Vdc
Voltage tolerance	12 or 24v DC
Solenoid	Rated for continuous use
Monitoring	Solenoid monitor - 1amp NO/NC micro switch Door/latch monitor - 1amp NO/NC micro switch
Duty	Fail safe or fail secure, changeable on site
Tested to	1,000,000 cycles
Dimensions (H x W x D) case	234 x 40 x 27mm
Finish	BLK
Latch	To suit 15-20mm pullman latch
Accessories	N/A

Dimensions

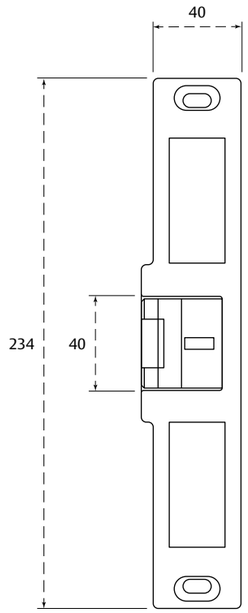

How to order

Order code	Description	Finish
112601-000	Trimec ES2601-T 12V fail safe with roller keeper for panic bar	BLK

ES9000 series

Offering superior strength and durability to suit the most demanding environments, with the ability to operate with up to 25kg of pre-load pressure on the keeper.

Features and benefits

- Durability tested to 3,000,000 cycles
- Superior strength with a static holding force of 1,300kg
- Preload of up to 25kg ensures the keep still engages and doors continue to operate despite pressures exerted by door seals, air flow and misaligned doors
- Can be set up to fail safe or fail secure on site, for flexibility
- Variable voltage 10 - 30v DC
- Reduces the residual noise in buildings due to the significantly quieter latch keep operation
- Built in protection diode
- Mounting tabs as standard

Testing and certification

UKCA / CE marked (EMC)	Yes
Certified in compliance with	EN 61000-6-3:2007 + A1:2011 + AC:2012, EN 50130-4:2011 + A1:2014 & IEC 61000-6-2:2016
Suitable for fire doors	Timber FD30
Guarantee	5 years

Specification

Holding force	1,300kg (2866lbs)
Use	Interior and entrance doors IP54 rated
Operating temperature	-20°C to + 60°C
Current draw	250mA @12Vdc – 130mA @24Vdc
Voltage tolerance	10 – 30v DC
Solenoid	Rated for continuous use
Monitoring	Solenoid monitor - 1 amp NO/NC micro switch Door/Latch - 1 amp NO/NC micro switch
Duty	Fail safe or fail secure, changeable on site
Tested to	1,200,000 cycles endurance rating @ 25kg pre-load 3,000,000 cycles general durability without pre-load conditions
Dimensions (H x W x D) case	176x 28.5 x 26.5mm
Finish	SS/BLK
Latch	Suitable for 15mm latch with 3mm door gap
Accessories	See electromagnetic accessories section for items such as extension lip

Dimensions

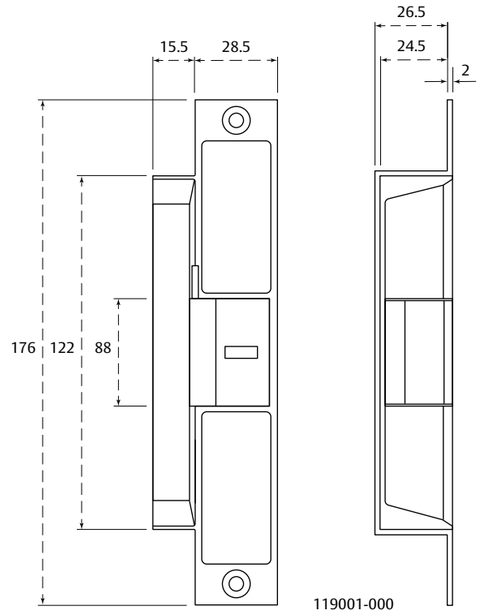

How to order

Order code	Description	Finish
119001-000	ES9000 PTO/PTL pre - load multifunction strike with standard 15.5mm lip - no extension lip holes	SS/BLK
119001-010	ES9000 PTO/PTL pre - load multifunction strike - no lip	SS/BLK
119001-020	ES9000 PTO/PTL pre - load multifunction strike - 8mm lip - no extension lip holes	SS/BLK
119001-060	Trimec ES9000 PTO/PTL - pre - load multifunction strike - with extension lip holes	SS/BLK

ASSA ABLOY
Opening Solutions

900, 910, 911 and 920 series

High strength electric strikes ideal for doors with standard security requirements.

Features and benefits

- Stainless steel housing and steel pivoting staple offers greater protection and resistance to attack
- Impact and shock proof design (910, 911 and 920), provides higher security and integrity to the doors locking mechanism
- Pre-load (910, 911 and 920) allows doors to continue to operate despite pressures exerted by door seals, air flow and misaligned doors
- Works in both 12 and 24v DC
- Optional latchbolt engagement monitoring
- Built-in transient protection against back electric and magnetic fields EMF, prevents damage to electronics from voltage spikes
- Symmetrical design to fit Scandinavian double latch locks
- Compatible with Modular and Connect range lockcases

Classification code

Standard

3	X	9	D	-	0	0	0	1
(1-3)	(A-Y)	(1-9)	(0-F)	(NPD)	(0-P)	(0-7)	(0-1)	(0-3)

EN 14846:2008

Monitored

3	x	9	D	-	0	0	1	1
(1-3)	(A-Y)	(1-9)	(0-F)	(NPD)	(0-P)	(0-7)	(0-1)	(0-3)

EN 14846:2008

Testing and certification

UKCA / CE marked (fire)	Yes
UKCA / CE marked (EMC)	Yes
Certified in compliance with	EN 61000-6-1, EN 61000-6-3, EN 14846 (920&920M only)
Suitable for fire doors	Yes (920&920M only)
Guarantee	5 years

Specification

Holding force	900/900M - 600kg, 910/910M - 700kg, 911/911M - 1,000kg, 920/920M - 1,000kg
Use	900/900M - Interior only, 910/910M - Interior and entrance doors 911/911M - Interior and entrance doors, 920/920M - Interior and entrance doors
Operating temperature	-20°C to + 60°C
Current draw	250mA @12Vdc – 130mA @24Vdc
Voltage tolerance	12 – 24v DC
Solenoid	Rated for continuous use
Monitoring	Latchbolt engagement monitoring
Duty	900/900M - fail safe or fail secure selectable, 910/910M - fail secure only 911/911M - fail safe only, 920/920M - fail secure only
Tested to	1,000,000 cycles
Dimensions (H x W x D) case	140 x 26.5 x 37.5mm
Mechanism	Steel
Faceplate finish	SS
Latch	Suitable for 15mm latch with 3mm door gap
Accessories	See electromagnetic accessories section for items such as faceplates

Dimensions

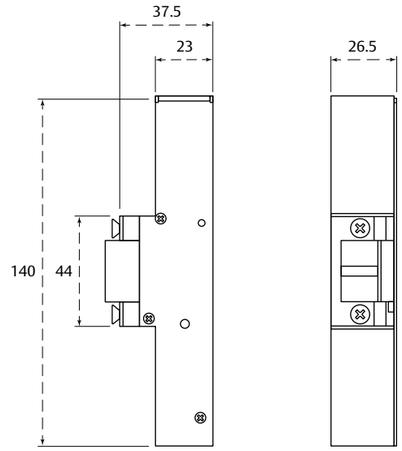

How to order

Order code	Description	Finish
900107000	900 strike body 12/24V multifunction	SS
900437000	900M strike body 12/24V multifunction – monitored	SS
910107000	910 strike body 12/24V fail secure	SS
910437000	910M strike body 12/24V fail secure – monitored	SS
911107000	911 strike body 12/24V fail safe	SS
911437000	911M strike body 12/24V fail safe – monitored	SS
920107000	920 strike body 12/24V fail secure	SS
920437000	920M strike body 12/24V fail secure – monitored	SS

ASSA ABLOY
Opening Solutions

960 and 961 series

The highest strength electric strikes for applications that demand the highest security and durability.

Features and benefits

- Extreme holding strength of up to 1,000kg
- Stainless steel housing and steel pivoting staple offers greater protection and resistance to attack
- Impact and shock proof design, provides higher security and integrity to the doorlocking mechanism
- Pre-load allows doors to continue to operate despite pressures exerted by door seals, air flow and misaligned doors
- Works in both 12 and 24v DC
- Monitoring of both the latchbolt engagement and deadlocking of the pivoting staple
- Built-in transient protection against back EMF, prevents damage to electronics from voltage spikes
- Supplied with 5 metre integrated connection cable for greater speed and ease of installation
- Compatible with Modular and Connect range lockcases

Classification code

UK CA CE 5 YEAR GUARANTEE 1000 kg HOLDING FORCE

Standard

3	X	9	D	-	0	0	0	1
(1-3)	(A-Y)	(1-9)	(0-F)	(NPD)	(0-P)	(0-7)	(0-1)	(0-3)

EN 14846:2008

Monitored

3	X	9	D	-	0	0	1	1
(1-3)	(A-Y)	(1-9)	(0-F)	(NPD)	(0-P)	(0-7)	(1-1)	(0-3)

EN 14846:2008

Testing and certification

UKCA / CE marked (fire)	Yes
UKCA / CE marked (EMC)	Yes
Certified in compliance with	EN 61000-6-1, EN 61000-6-3, EN 14846 (960 only)
Suitable for fire doors	Yes (960 only)
Guarantee	5 years

Specification

Holding force	1,000kg (2204lbs)
Use	Interior and entrance doors
Operating temperature	-20°C to + 60°C
Current draw	250mA @12Vdc – 130mA @24Vdc
Voltage tolerance	12 – 24v DC
Solenoid	Rated for continuous use
Monitoring	Latchbolt engagement and deadlocking of pivot staple
Duty	960 - fail secure only 961 - fail safe only
Tested to	1,000,000 cycles
Dimensions (H x W x D) case	140 x 26.5 x 34mm
Mechanism	Steel
Faceplate finish	SS
Latch	Suitable for 15mm latch with 3mm door gap
Accessories	See electromagnetic accessories section for items such as faceplates

Dimensions

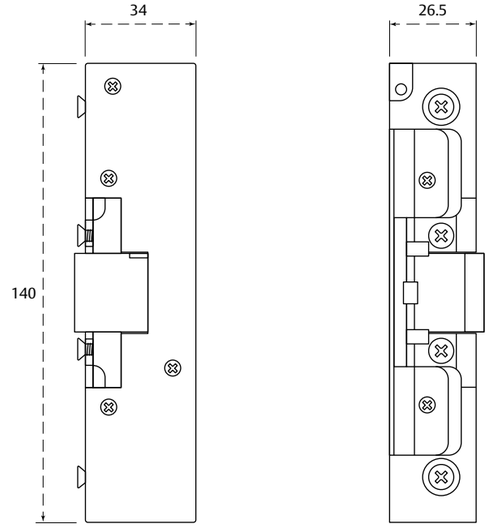

How to order

Order code	Description	Finish
960437000	960 strike body 12/24V fail secure	SS
961437000	961 strike body 12/24V fail safe	SS

ASSA ABLOY
Opening Solutions

14E/514E series

Medium strength electric strike for areas where high security electric strikes are not required.

Features and benefits

- Medium strength strike that resists 450kg of side pressure on the pivoting staple
- Supplied fitted with either faceplate 505, 510, 5 or 10
- Faceplate and pivoting staple are manufactured from high grade steel and offers greater protection and resistance to attack
- Tested to 1,000,000 cycles
- Can be used with both left and right-hand doors without adjustment
- DC continuous duty fail secure
- Strike opens when current is on and locks automatically when current is off

Classification code

3 (1-3) | M (A-Y) | 5 (1-9) | 0 (0-F) | - (NPD) | N (0-P) | 0 (0-7) | 0 (0-1) | 1 (0-3)

EN 14846:2008

UKCA CE 5 YEAR GUARANTEE 450 kg HOLDING FORCE

Testing and certification

UKCA / CE marked (EMC)	Yes
Certified in compliance with	EN 61000-6-1, EN 61000-6-3, EN 14846
Suitable for fire doors	No
Guarantee	5 years

Specification

Holding force	450kg (992lbs)
Use	Indoor and entrance doors
Operating temperature	-20°C to + 60°C
Voltage tolerance	12v DC
Solenoid	Rated for continuous use
Monitoring	14E - No 154E - latchbolt engagement
Duty	Fail secure
Tested to	1,000,000 cycles
Dimensions (H x W x D) case	90 x 28.2 x 20mm
Mechanism	Steel
Faceplate finish	SS
Latch	Suitable for 15mm latch with 3mm door gap
Accessories	See electromagnetic accessories section for items such as faceplates

Dimensions

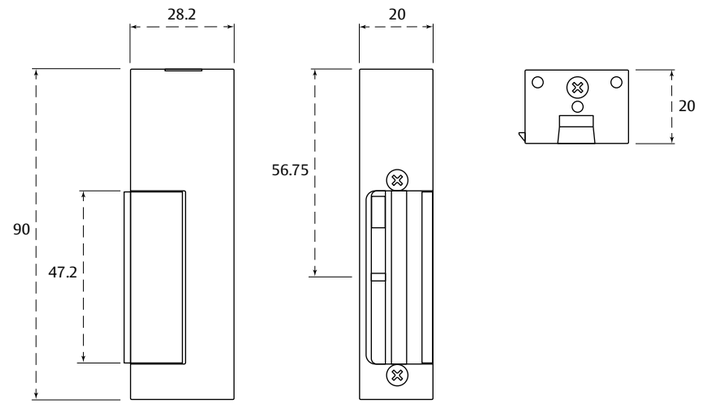

How to order

Order code	Description	Finish
10003020857	14/5 12V electric strike PTO, complete with no. 5 faceplate	SS
10003220857	14/10 12V electric strike PTO, complete with no. 10 faceplate	SS
10039120857	14/505 12V electric strike PTO , complete with no. 505 faceplate	SS
10038720857	14/510 12V electric strike PTO, complete with no. 510 faceplate	SS
50102020057	14E 12V electric strike body only PTO	SS
10004220857	514/5 12V monitored electric strike PTO , complete with no. 5 faceplate	SS
10004420857	514/10 12V monitored electric strike PTO , complete with no. 10 faceplate	SS
10039220857	514/505 12V monitored electric strike PTO , complete with no. 505 faceplate	SS
10038820857	514/510 12V monitored electric strike PTO , complete with no. 510 faceplate	SS
50112020057	514E 12V monitored electric strike body only PTO	SS

ASSA ABLOY
Opening Solutions

114A/5114A series

Medium strength electric strike for areas where security and ease of access, or evacuation are equally important.

Features and benefits

- Medium strength strike that resists 450kg of side pressure on the pivoting staple
- Supplied with either faceplate 505, 510, 5 or 10
- Faceplate and pivoting staple are manufactured from high grade steel and offers greater protection and resistance to attack
- Tested to 1,000,000 cycles
- Can be used with both left and right-hand doors without adjustment
- DC continuous duty fail unlocked
- Strike is closed when current is on and opens automatically when current is off

Testing and certification

UKCA / CE marked (EMC)	Yes
Certified in compliance with	EN 61000-6-1, EN 61000-6-3
Suitable for fire doors	No
Guarantee	5 years

Specification

Holding force	450kg (992lbs)
Use	Interior and entrance doors
Operating temperature	-20°C to + 60°C
Voltage tolerance	12v DC
Solenoid	Rated for continuous use
Monitoring	14E - No 154E - latchbolt engagement
Duty	Fail safe
Tested to	1,000,000 cycles
Dimensions (H x W x D) case	90 x 28.2 x 20mm
Mechanism	Steel
Faceplate finish	SS
Latch	Suitable for 15mm latch with 3mm door gap
Accessories	See electromagnetic accessories section for items such as faceplates

Dimensions

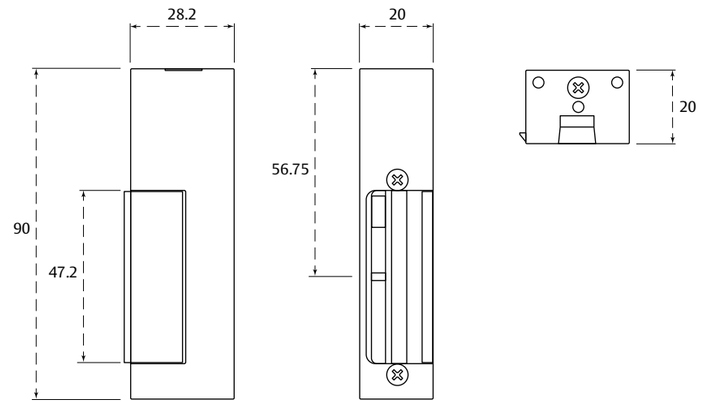

How to order

Order code	Description	Finish
10003620857	114/5 12V electric strike PTL , complete with no. 5 faceplate	SS
10003820857	114/10 12V electric strike PTL , complete with no. 10 faceplate	SS
10039320857	114/505 12V electric strike PTL , complete with no. 505 faceplate	SS
10038920857	114/510 12V electric strike PTL , complete with no. 510 faceplate	SS
50122020057	114A 12V electric strike body ONLY PTL	SS
10004820857	5114/5 12V monitored electric strike PTL , complete with no. 5 faceplate	SS
10005220857	5114/10 12V monitored electric strike PTL , complete with no. 10 faceplate	SS
10039420857	5114/505 12V monitored electric strike PTL , complete with no. 505 faceplate	SS
10039020857	5114/510 12V monitored electric strike PTL , complete with no. 510 faceplate	SS
50132020057	5114 12V monitored electric strike body only PTL	SS

ASSA ABLOY
Opening Solutions

ES150

A surface mounted electric strike offering high levels of security, with features usually provided by more expensive electric locking solutions.

Features and benefits

- 680kg high strength holding force
- Can be set up to fail safe or fail secure on site, for flexibility
- Easy installation suitable for steel and timber door frames
- For use with rim or surface type dead latches
- Stainless steel striker for extra strength and durability

Testing and certification

UKCA / CE marked (EMC)	Yes
Certified in compliance with	EN 61000-6-1, EN 61000-6-3
Suitable for fire doors	No
Guarantee	5 years

Specification

Holding force	680kg (1500lbs)
Use	Interior and entrance doors IP56 rated
Operational temperature range	-20° to +60°C
Current draw	250mA at 12V DC and 125mA at 24V DC
Voltage tolerance	12 to 24V DC
Solenoid	Rated for continuous use
Monitoring	No
Duty	Fail safe or fail secure, changeable on site
Tested to	1,000,000
Mechanism	Steel
Dimensions (H x W x D) body	90 x 60 x 32mm
Finish	BLK
Accessories	N/A

Dimensions

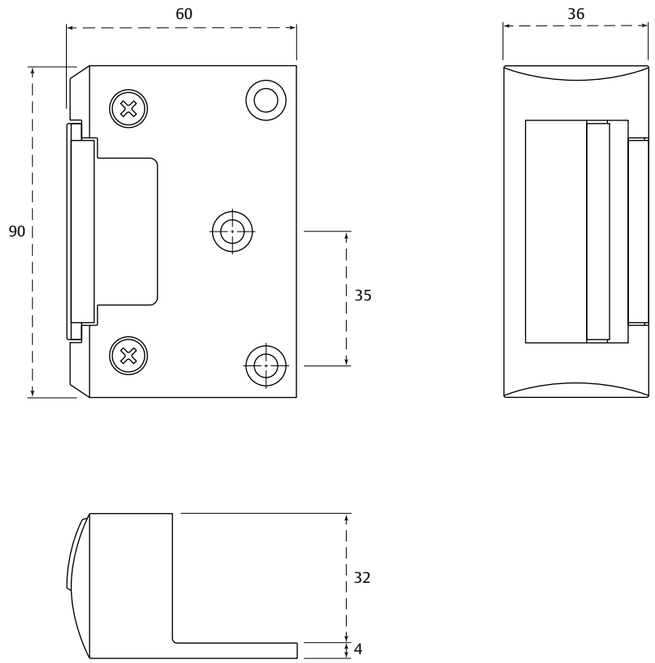

How to order

Order code	Description	Finish
110151-010M	ES150 strike RIM 12V DC PTL	BLK
110152-010M	ES150 strike RIM 12V DC PTO	BLK

Electromagnetic locks

Electromagnetic locks, also referred to as mag locks, magnet locks or magnetic locks, use high performance electromagnets to control access into an area.

They are a locking device that consists of two main components, an electromagnet and an armature plate. When the armature plate is in contact with the energised electromagnet, a strong magnetic flux is created, which locks the two parts together.

Electromagnetic locks are one of the most common types of lock to retrofit, as they are generally easier to install than other alternative electric locking devices.

Our range features both internal and external direct pull magnet devices with durable, sleek aesthetics.

Range benefits

- A concise range of standard and high specification direct pull magnets, as well as shear and intelligent ranges
- High specification direct pull and intelligent electromagnetic lock ranges supplied with unrivalled warranties
- Can be used on a wide range of door materials including timber, metal and glass and different door types such as swinging doors with single or double leaves as well as sliding doors
- Complies with all relevant security requirements and performance standards
- Easy to install and can be retrofitted into existing applications
- Comprehensive range of accessories enables use in a wide range of applications and different door materials and layouts
- Low energy ranges available

Types of electromagnetic locks

Direct pull

Standard specification

With unsurpassed durability, these devices are ideal for traffic control in high-use areas where low maintenance is required.

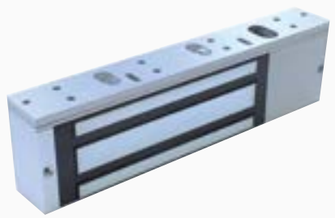

Direct pull

High specification

Offering a stronger holding force than a standard electromagnetic lock, as well as monitoring for areas of high security.

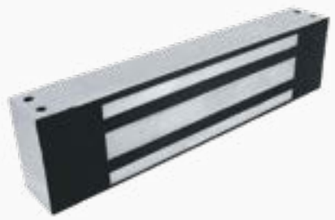

Shear magnets

Concealed magnetic locks work well on swing or sliding doors. Hidden strength is ideal for traffic control in light to medium security applications such as private workspaces and atriums.

Intelligent

The Intelligent series combines security, style and convenience, with up to 80% energy reduction. All-in-one integration options, faster installation and decreased energy consumption make these the most advanced and energy efficient electromagnetic locks available.

Magnetic lock selection guide

Maglock	M32	M34R	M38	M62	DM62	M68	M82
Holding force	272kg (600lbs)	227kg (500lbs)	272kg (600lbs)	544kg (1200lbs)	544kg (1200lbs)	544kg (1200lbs)	816kg (1800lbs)
Dimensions (H x W x D)	47 x 203 x 41mm	38 x 268 x 21mm	64 x 267 x 43mm	38 x 268 x 21mm	76 x 559 x 44mm	92 x 267 x 51mm	92 x 267 x 51mm
Double magnet	Double available	-	-	-	Double magnet	-	-
Outdoor use	Yes	Yes	-	Yes	Yes	-	Yes
Duty	12/24V	12/24V	12/24V	12/24V	12/24V	12/24V	12/24V
Monitoring	Optional	Optional	Optional	Optional	Optional	Optional	Optional
Anti-tamper	Yes	Yes	Optional	Yes	Yes	Optional	Yes
Rust resistant	Yes	Yes	Yes	Yes	Yes	Yes	Yes
Swing doors	Yes	-	Yes	Yes	Yes	Yes	Yes
Sliding doors	-	Single only	-	-	-	-	-
Warranty	Lifetime	Lifetime	Lifetime	Lifetime	Lifetime	Lifetime	Lifetime
Highlight feature	Small	Recessed	Noise suppression	High usage exterior	Double magnet	High usage indoor	High security

Maglock	SAM	SAM24	261	262	281	291	1354
Holding force	544kg (1200lbs)	272kg (600lbs)	250kg (551lbs)	250kg (551lbs)	510kg (1124lbs)	540kg (1190lbs)	1500kg (3306lbs)
Dimensions (H x W x D)	38 x 275 x 36mm	29 x 183 x 24mm	42 x 250 x 25mm	38 x 230 x 28mm	73 x 266 x 40mm	63 x 220 x 41mm	30 x 164 x 25mm
Double magnet	-	-	42 x 500 x 25mm	-	73 x 532 x 40mm	-	-
Outdoor use	Yes	Yes	-	Yes	-	Yes IP67	Yes
Duty	12/24v	12/24v	12/24v	12/24v	12/24v	12/24v	12/24v
Monitoring	Optional	Optional	Optional	Optional	Optional	Standard	Standard
Anti-tamper	Yes	Yes	Yes	Yes	Yes	Yes	Yes
Rust resistant	Yes	Yes	-	-	-	Yes	Yes
Swing doors	Yes	Yes	Yes	Yes	Yes	Yes	Yes
Sliding doors	Yes	Yes	-	Yes	-	-	-
Warranty	Lifetime	Lifetime	3yrs	3yrs	3yrs	3yrs	1yr
Highlight feature	Recessed / strong	Recessed / small	Mini / FD30-T	Mortice application	Built in voltage spike suppressor/ morticed option	Gate magnet / IP67	Mortice or surface fit

Magnetic locks

The strength of modern magnetic locks compares well with traditional door locks and cost less to power than a conventional light bulb. As electromagnetic locks require power to lock they will 'fail safe' if power is removed. If security is favoured over escape (i.e., unmanned, alternative escape route available etc) a battery back-up could be added for continuous operation. For maximum security, a 'fail secure' product such as our electric strike or solenoid lock range is available.

ASSA ABLOY
Opening Solutions

M32

Highly durable, medium strength electromagnet, with a 272kg holding force, ideal for traffic control in both internal and external high-use areas within secured or monitored perimeters, where abuse or vandalism on doors is not expected.

Features and benefits

- Unrivalled MagnaCare® no-fault, no questions asked lifetime warranty
- Patented instant release circuit eliminates residual magnetism, for easy opening and closing
- Efficient and low power usage
- Automatic dual-voltage configuration with no field adjustment required
- Fully sealed tamper and weather resistant electronics
- Rust resistant with all ferrous metal surfaces plated for durability and external use
- Ultra-secure collapsing blind nuts mount to door frame for strength and reliability
- Lock options include bondstat magnetic bond sensor and integrated door position switch
- Noise suppression with built-in MOV
- Size optimised for use with door closers

Specification

Holding force	272kg (600lbs)
Use	Interior and exterior use
Operational temperature	-40 to +60ºC
Current draw	300mA at 12V DC and 150mA at 24V DC
Dimensions (H x W x D)	47 x 203 x 41mm
Finish	SSS
Conductor cable	3.05m jacketed and stranded
Accessories	See electromagnetic accessories section for items such as the Securitron shock absorbing strike mount

Dimensions

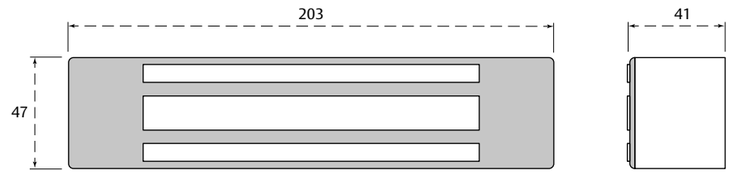

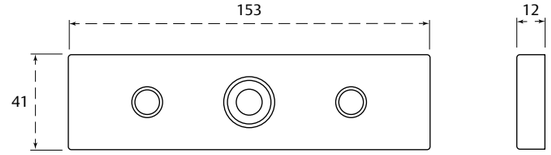

Testing and certification

UKCA / CE marked (EMC, R&TTE)	Yes
Certified in compliance with	EN 61000-6-1, EN 61000-6-3, UL1034 burglary resistant listed, ANSI/BHMA A156.23, Grade 3
Suitable for fire doors	No
Guarantee	Lifetime

How to order

Order code	Description	Finish
M32BM	M32 Eco magnalock with bondstat sensor	SSS
M32FBM	M32 face fixed with bondstat sensor	SSS
M32FBDM	M32 face fixed with bondstat sensor and DPS	SSS

ASSA ABLOY
Opening Solutions

M34R

Highly durable, medium strength, recessed electromagnet with a 227kg holding force. The recessed design conceals the body and makes it ideal for automatic sliding doors.

Features and benefits

- Unrivalled MagnaCare® no-fault, no questions asked lifetime warranty
- Recessed and direct mounted within door frame for security and a sleek look
- Patented instant release circuit eliminates residual magnetism, for easy opening and closing
- Efficient and low power usage
- Automatic dual-voltage configuration with no field adjustment required
- Fully sealed tamper and weather resistant electronics
- Rust resistant with all ferrous metal surfaces plated for durability and external use
- Mounted using steel machine screws into blind finishing nuts for strength
- Noise suppression with built-in MOV

Testing and certification

UKCA / CE marked (EMC, R&TTE)	Yes
Certified in compliance with	EN 61000-6-1, EN 61000-6-3, UL294
Suitable for fire doors	No
Guarantee	Lifetime

Specification

Holding force	227kg (500lbs)
Use	Interior and exterior use
Operational temperature	-40 to +60ºC
Current draw	320mA at 12V DC and 170mA at 24V DC
Dimensions (H x W x D)	38 x 268 x 28mm
Finish	SSS
Conductor cable	3.05m jacketed and stranded
Accessories	N/A

Dimensions

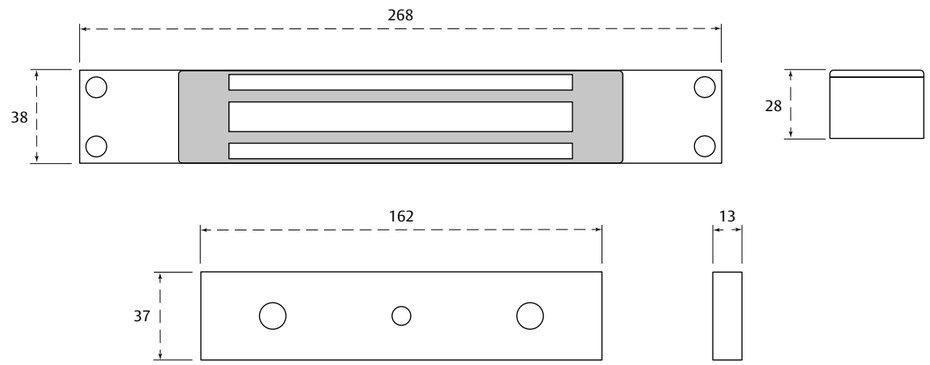

How to order

Order code	Description	Finish
M34RM	M34R recessed magnalock	SSS
M34RBM	M34R recessed magnalock bondstat sensor	SSS

ASSA ABLOY
Opening Solutions

M38

Highly durable, medium strength electromagnet with a 272kg holding force. Ideal for traffic control in internal high-use areas within secured or monitored perimeters.

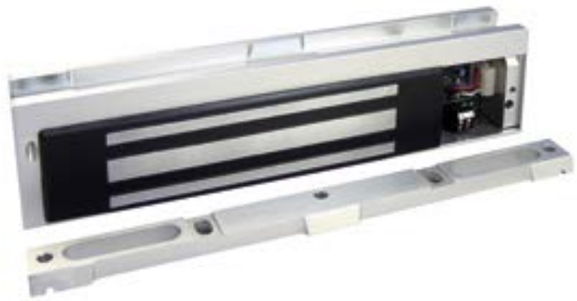

Features and benefits

- Unrivalled MagnaCare® no-fault, no questions asked lifetime warranty
- Patented instant release circuit eliminates residual magnetism, for easy opening and closing
- Efficient and low power usage
- Automatic dual-voltage configuration with no field adjustment required
- Fully sealed tamper and weather resistant electronics
- Rust resistant with all ferrous metal surfaces plated for durability and external use
- Bracket mounting and internal wiring chamber allows quick and accurate installation using minimal tools
- Ultra-secure collapsing blind nuts mount to door frame for strength and reliability
- Noise suppression with built-in MOV

Testing and certification

UKCA / CE marked (EMC, R&TTE)	Yes
Certified in compliance with	EN 61000-6-1, EN 61000-6-3, ANSI/UL294 listed
Suitable for fire doors	No
Guarantee	Lifetime

Specification

Holding force	272kg (600lbs)
Use	Interior use
Operational temperature	-40 to +60ºC
Current draw	300mA at 12V DC and 150mA at 24V DC
Dimensions (H x W x D)	64 x 266.7 x 43.3mm
Finish	BA
Accessories	See electromagnetic accessories section for items such as upgrade kit for thick doors

Dimensions

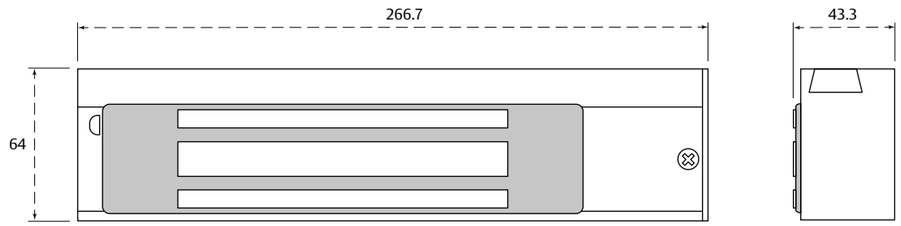

How to order

Order code	Description	Finish
M38D	M38 magnalock — 12/24 VDC DPS	BA

M62

Highly durable, high strength electromagnet with a 544kg holding force. Ideal for interior, perimeter, and exterior access control system applications, with higher security requirements, size optimised for use with door closers.

Features and benefits

- Unrivalled MagnaCare® no-fault, no questions asked lifetime warranty
- Patented instant release circuit eliminates residual magnetism, for easy opening and closing
- Efficient and low power usage
- Automatic dual-voltage configuration with no field adjustment required
- Fully sealed tamper and weather resistant electronics
- Rust resistant with all ferrous metal surfaces plated for durability and external use
- Bracket mounting and internal wiring chamber allows quick and accurate installation using minimal tools
- Ultra-secure collapsing blind nuts mount to door frame for strength and reliability
- Noise suppression with built-in MOV

Testing and certification

UKCA / CE marked (EMC, R&TTE)	Yes
Certified in compliance with	EN 61000-6-1, EN 61000-6-3, ANSI/UL294
Suitable for fire doors	No
Guarantee	Lifetime

Specification

Holding force	544kg (1200lbs)
Use	Interior and exterior use
Operational temperature	-40 to +60ºC
Current draw	250mA at 12V DC and 150mA at 24V DC
Dimensions (H x W x D)	76 x 203 x 44mm
Finish	SSS
Conductor cable	3.05m jacketed and stranded
Accessories	See electromagnetic accessories section for items such as the Securitron shock absorbing strike mount

Dimensions

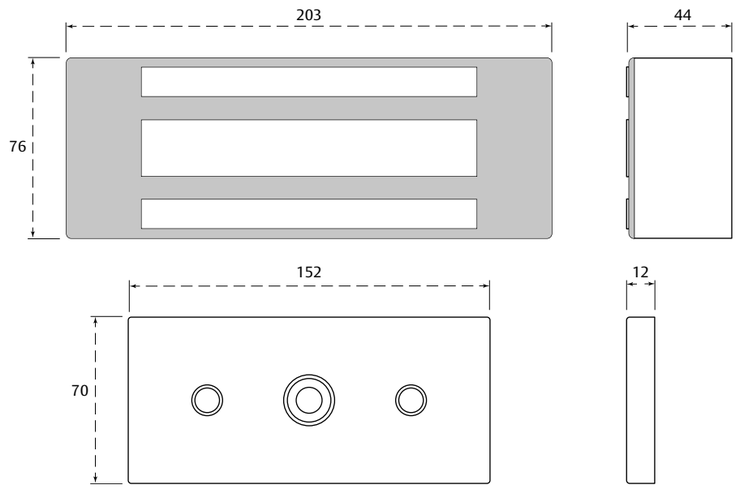

How to order

Order code	Description	Finish
M62BM	M62 magnalock 544kg (1200lbs) bondstat	SSS
M62FBM	M62 face drilled magnalock 544kg (1200lbs) bondstat	SSS

ASSA ABLOY
Opening Solutions

DM62

Highly durable, high strength double electromagnet, with a 544kg holding force. Ideal for double doors in interior, perimeter and exterior access control system applications, with higher security requirements.

Features and benefits

- Both electromagnets can be controlled as one or individually
- Patented instant release circuit eliminates residual magnetism, for easy opening and closing
- Efficient and low power usage
- Automatic dual-voltage configuration with no field adjustment required
- Fully sealed tamper and weather resistant electronics
- Rust resistant with all ferrous metal surfaces plated for durability and external use
- Surface mounts easily with mounting bracket using minimal tools for easy installation
- Ultra-secure collapsing blind nuts mount to door frame for strength and reliability
- Noise suppression with built-in MOV

Testing and certification

UKCA / CE marked (EMC, R&TTE)	Yes
Certified in compliance with	EN 61000-6-1, EN 61000-6-3, ANSI/UL294
Suitable for fire doors	No
Guarantee	Lifetime

Specification

Holding force	544kg (1200lbs) - per lock
Use	Interior and exterior use
Operational temperature	-40 to +60ºC
Current draw	250mA at 12V DC and 150mA at 24V DC
Dimensions (H x W x D)	76 x 559 x 44mm
Finish	SSS
Conductor cable	1m jacketed and stranded
Accessories	See electromagnetic accessories section for items such as aluminum spacer

Dimensions

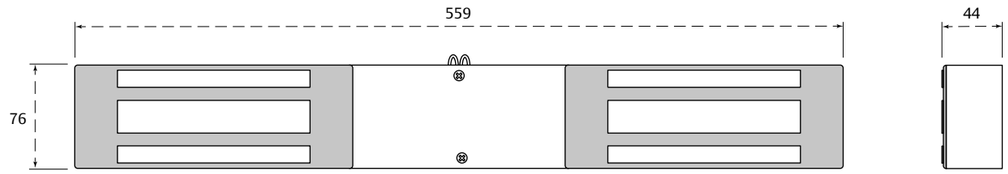

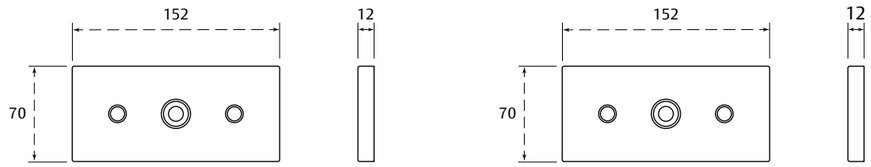

How to order

Order code	Description	Finish
DM62M	Double magnet - DM62 12/24 VDC 544kg (1200lbs)	SSS
DM62BDM	Double magnet - DM62BDM 12/24VDC 1200lbs bondstat DPS (Monitored)	SSS

ASSA ABLOY
Opening Solutions

M68

Highly durable, high strength bracket mounted electromagnet, with a 544kg holding force. Ideal for high security and high traffic internal applications.

Features and benefits

- Patented instant release circuit eliminates residual magnetism, for easy opening and closing
- Efficient and low power usage
- Automatic dual-voltage configuration with no field adjustment required
- Fully sealed tamper and weather resistant electronics
- Rust resistant with all ferrous metal surfaces plated for durability and external use
- Bracket mounting and internal wiring chamber allows quick and accurate installation
- Ultra-secure collapsing blind nuts mount to door frame for strength and reliability
- Noise suppression with built-in MOV

Testing and certification

UKCA / CE marked (EMC, R&TTE)	Yes
Certified in compliance with	EN 61000-6-1, EN 61000-6-3, ANSI/UL294
Suitable for fire doors	No
Guarantee	Lifetime

Specification

Holding force	544kg (1200lbs)
Use	Interior use
Operational temperature	-0 to +43°C
Current draw	250mA at 12V DC and 150mA at 24V DC
Dimensions (H x W x D)	92 x 266.7 x 50.8mm
Finish	BA
Accessories	See electromagnetic accessories section for items such as upgrade kit for thick doors

Dimensions

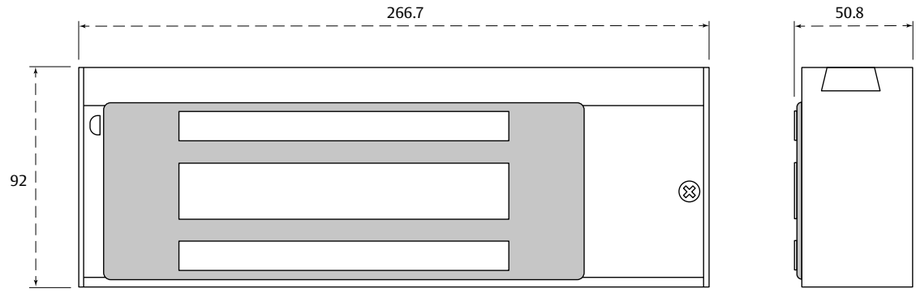

How to order

Order code	Description	Finish
M68D	M68 magnalock DPS	BA

ASSA ABLOY
Opening Solutions

M82

Highly durable, extreme strength electromagnet, with 816kg holding force. Ideal for high security and high risk interior and exterior applications, where extreme forces may be encountered.

Features and benefits

- Unrivalled MagnaCare® no-fault, no questions asked lifetime warranty
- Patented instant release circuit eliminates residual magnetism, for easy opening and closing
- Efficient and low power usage
- Automatic dual-voltage configuration with no field adjustment required
- Fully sealed tamper and weather resistant electronics
- Rust resistant with all ferrous metal surfaces plated for durability and external use
- Bracket mounting and internal wiring chamber allows quick and accurate installation using minimal tools
- Ultra-secure collapsing blind nuts mount to door frame for strength and reliability
- High security - preferred by prisons and detention facilities
- Noise suppression with built-in MOV

816 kg HOLDING FORCE

Testing and certification

UKCA / CE marked (EMC, R&TTE)	Yes
Certified in compliance with	EN 61000-6-3 A1 and EN 61000-6-1, ANSI/UL294
Suitable for fire doors	No
Guarantee	Lifetime

Specification

Holding force	816kg (1800lbs)
Use	Interior and exterior use
Operational temperature	-40 to +60ºC
Current draw	350mA at 12V DC and 200mA at 24V DC
Dimensions (H x W x D)	76 x 305 x 44mm
Finish	SSS
Conductor cable	3.05m jacketed and stranded
Accessories	See electromagnetic accessories section for items such as the Securitron shock absorbing strike mount and exit devices

Dimensions

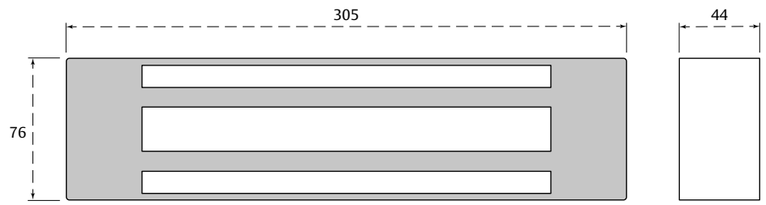

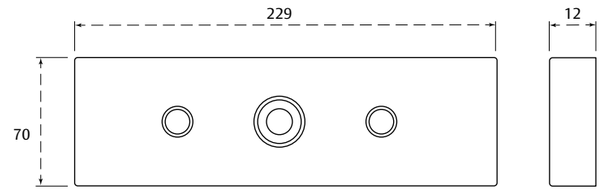

How to order

Order code	Description	Finish
M82BM	M82 magnalock direct mount with bondstat magnetic bond sensor	SSS
M82BDM	M82 direct mount with bondstat magnetic bond sensor and monitored DPS	SSS
M82FBM	M82 face drilled with bondstat magnetic bond sensor	SSS
M82FBDM	M82 face drilled with bondstat magnetic bond sensor and monitored DPS	SSS
M82GBM	M82 gate conduit with bondstat magnetic bond sensor	SSS
M82FGBM	M82 magnalock 12 24VDC face drilled gate conduit bondstat sensor	SSS

261 and 262

Direct pull magnet range with a 250kg holding force; durable, low maintenance and in a compact case size with clean aesthetics.

Features and benefits

- Security pin feature helps prevent unauthorised removal of the magnet
- Ideal for use with narrow doors
- Flexible solutions where space is limited due to other door hardware, pull/push arms or automatic safety devices
- Outward and inward opening door variants
- Double magnet model version available
- Surface mounted or mortice versions available
- Monitoring available
- Built in voltage spike suppressor

Testing and certification

UKCA / CE marked (EMC)	Yes
Certified in compliance with	EN 1634-1, EN 61000-6-, EN 61000-6-3
Suitable for fire doors	Timber FD30 (261 only)
Guarantee	3 years

Specification

Holding force	250kg (551lbs)
Use	Interior and exterior use
Operational temperature	-20 to +60ºC
Positioning	261 outward opening - surface mounted to door frame header 261 inward opening - door frame header using 'L' & 'Z' brackets 262 - Mortice mounted for single action swinging or sliding door applications (not to be used as a shearlock)
Current draw	480mA @ 12V DC, 240mA @ 24V DC Built-in voltage spike suppressor
Voltage tolerance	12 or 24V DC (±15%) selectable
Monitoring	261 - Relay dry contact with LED integral 262 - Compact isolated unit on 262-005
Dimensions (H x W x D) magnet	261 single - 25 x 250 x 42mm 261 double - 25 x 500 x 42mm 262 single - 28 x 230 x 38mm
Dimensions (H x W x D) armature	11.3 x 160 x 36mm
Latch	Maximum 3mm door gap
Finish	SAA
Accessories	See electromagnetic accessories section for items such as armature housing and Z and L brackets

Dimensions

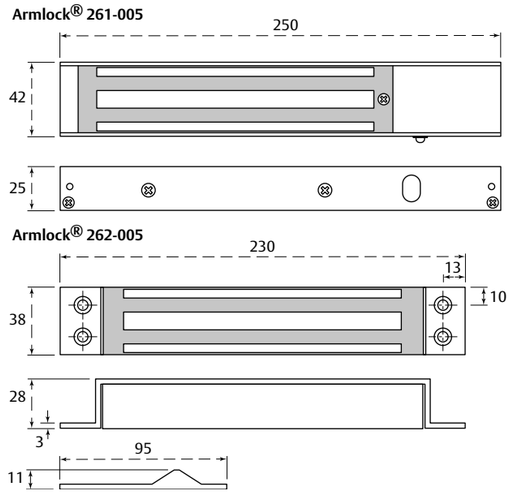

How to order

Order code	Description	Finish
261-000	261 single mini magnet	SAA
261-005	261 single mini magnet-monitored	SAA
261-200	261 double mini magnet	SAA
261-205	261 double mini magnet-monitored	SAA
262-005	262 mortice magnet	SAA

ASSA ABLOY
Opening Solutions

281

High quality direct pull magnets, with a 510kg holding force, that are used as part of an access control system on aluminium, timber and steel doors.

Features and benefits

- Highly durable and low maintenance
- Security pin feature helps prevent unauthorised removal of the magnet from the door frame fixing plate
- Outward and inward opening doors versions available
- Double magnet model version available
- Monitoring available (hall effect)
- Built in voltage spike suppressor

UK CA CE 3 YEAR GUARANTEE 510 kg HOLDING FORCE

Testing and certification

UKCA / CE marked (EMC)	Yes
Certified in compliance with	EN 61000-6-1, EN 61000-6-3
Suitable for fire doors	No
Guarantee	3 years

Specification

Holding force	510kg (1124lbs)
Use	Interior and exterior use
Operational temperature	-20 to +60ºC
Positioning	Outward opening - surface mounted to door frame header Inward opening - door frame header using 'L' & 'Z' brackets
Current draw	480mA @ 12V DC, 240mA @ 24V DC Built-in voltage spike suppressor
Voltage tolerance	12 or 24V DC (±15%) selectable
Monitoring	Relay dry contact with LED integral
Dimensions (H x W x D) magnet	281 single - 40 x 266 x 73mm 281 double - 40 x 532 x 73mm
Dimensions (H x W x D) armature	16 x 160 x 61mm
Latch	Maximum 3mm door gap
Finish	SAA
Accessories	See electromagnetic accessories section for items such as armature housing and Z and L brackets

Dimensions

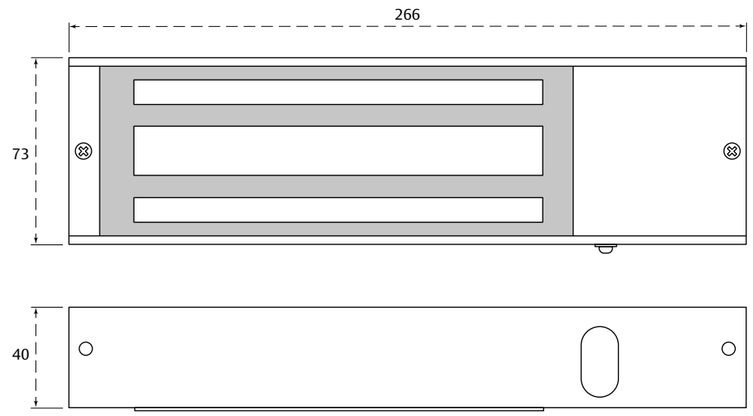

How to order

Order code	Description	Finish
281-000	281 single magnet	SAA
281-005	281 single magnet-monitored	SAA
281-200	281 double magnet	SAA
281-205	281 double magnet-monitored	SAA

ASSA ABLOY
Opening Solutions

291

High quality external direct pull magnet, with a 540kg holding force, that is used as part of an access control system or access and exit control of any external gate or barrier.

Features and benefits

- Independently tested to achieve an ingress protection rating of IP67 for external use
- Security pin feature helps prevent unauthorised removal of the magnet from the door frame fixing plate
- Highly durable, low maintenance and compact in case size for a sleek look
- User selectable dual voltage 12 or 24v DC for on-site flexibility
- Dual fixing positions to suit both side and face fix applications
- Reed switches monitoring as standard
- Built in voltage spike suppressor
- Supplied with 1 metre cable

UK CA CE 3 YEAR GUARANTEE 540 kg HOLDING FORCE

Testing and certification

UKCA / CE marked (EMC)	Yes
Certified in compliance with	EN 61000-6-1, EN 61000-6-3
Suitable for fire doors	No
Guarantee	3 years

Specification

Holding force	540kg (1190lbs)
Use	External use rated to IP67
Operational temperature	-20 to +60ºC
Positioning	Side or face fixing
Current draw	500mA @ 12V DC, 250mA @ 24V DC Built-in voltage spike suppressor
Voltage tolerance	12 or 24V DC (±15%) dual coil
Monitoring	Reed switch
Dimensions (H x W x D) magnet	222 x 63 x 41mm
Dimensions (H x W x D) armature	185 x 61 x 16mm
Latch	Maximum 3mm door gap
Finish	SS
Accessories	See electromagnetic accessories section for items such as magnet Z bracket kit; also see Activation devices and power supplies for other related hardware

Dimensions

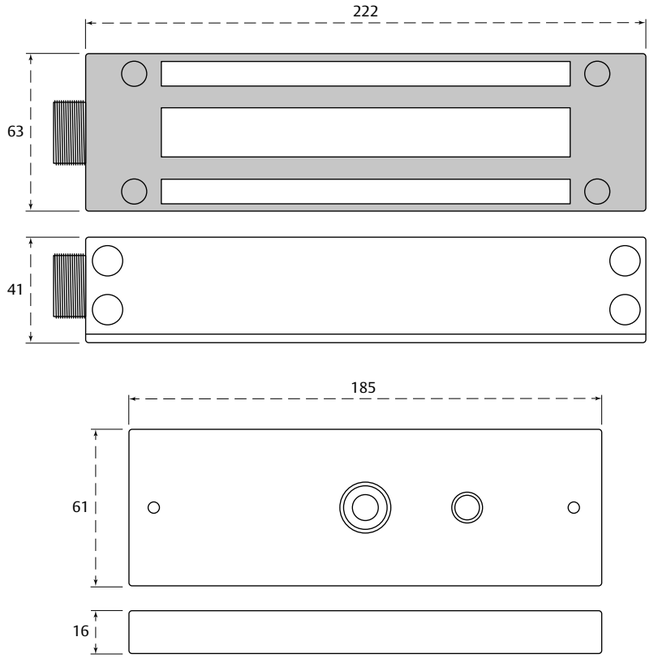

How to order

Order code	Description	Finish
291-005	291 external gate lock magnet-monitored	SS

ASSA ABLOY
Opening Solutions

M380E EcoMag

The most advanced and energy efficient electromagnet available, with a 272kg holding force, purposely designed for buildings where energy efficiency and sustainability are paramount.

Features and benefits

- High specification electromagnet with up to 80% decreased energy consumption and a biodegradable packaging insert
- Intelligent door prop sensing allows the magnet to de-energize the coil when the door is held open for extended periods, saving energy
- Unrivalled MagnaCare® no-fault, no questions asked lifetime warranty
- Strike plate mounting template makes for easier and faster installation
- Optional integrated passive infrared sensor request to exit, provides optimum coverage for detecting approaching people, so the door unlocks for egress
- LED indicator shows if the lock is secure, open, or has an incomplete bond
- Wire chamber anti-tamper switch sends an alarm output if the cover is removed

Testing and certification

UKCA / CE marked (EMC)	Yes
Certified in compliance with	EN 61000-6-, EN 61000-6-3, UL1034 burglary resistant listed, ANSI/BHMA A156.23, Grade 3
Suitable for fire doors	No
Guarantee	Lifetime

Specification

Holding force	272kg (600lbs)
Use	Interior use
Operational temperature	0 to 43°C
Average power draw (±10%)	140mA at 12V DC and 90mA at 24V DC
Maximum power draw (±10%)	585mA at 12V DC and 310mA at 24V DC
REX Power (±10%)	+25mA at 12V DC and +10mA at 24V DC
Dimensions (H x W x D)	56 x 254 x 62mm
Finish	SAA, SSS
Accessories	N/A

Dimensions

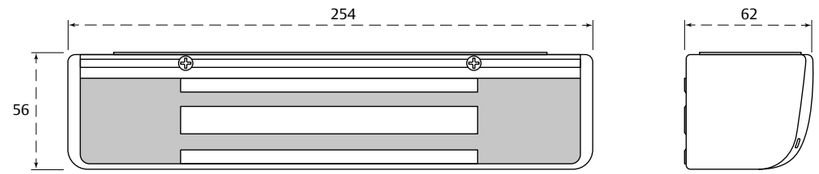

How to order

Order code	Description	Finish
M380EBDM-628	M380E EcoMag monitor and door position sensor	SAA
M380EBDM-630	M380E EcoMag monitor and door position sensor	SSS
M380EBDM-X-628	M380E EcoMag monitor and door position sensor, with integrated passive infrared request to exit	SAA
M380EBDM-X-630	M380E EcoMag monitor and door position sensor, with integrated passive infrared request to exit	SSS

M680E EcoMag

The most advanced and energy efficient electromagnet available, with a 544kg holding force, purposely designed for buildings where energy efficiency, sustainability and security are paramount.

Features and benefits

- High specification electromagnet with up to 80% decreased energy consumption and a biodegradable packaging insert
- Intelligent door prop sensing allows the magnet to de-energize the coil when the door is held open for extended periods, saving energy
- Unrivalled MagnaCare® no-fault, no questions asked lifetime warranty
- Strike plate mounting template makes for easier and faster installation
- Optional integrated passive infrared sensor request to exit, provides optimum coverage for detecting approaching people, so the door unlocks for egress
- LED indicator shows the lock is secure, open, or has an incomplete bond
- Wire chamber anti-tamper switch sends an alarm output if the cover is removed

544 kg HOLDING FORCE

Testing and certification

UKCA / CE marked (EMC)	Yes
Certified in compliance with	EN 61000-6-1, EN 61000-6-3, UL1034 burglary resistant listed, ANSI/BHMA A156.23, Grade 3
Suitable for fire doors	No
Guarantee	Lifetime

Specification

Holding force	544kg (1200lbs)
Use	Interior use
Operational temperature	0 to 43°C
Average power draw (±10%)	113mA at 12V DC and 52mA at 24V DC
Maximum power draw (±10%)	515mA at 12V DC and 290mA at 24V DC
REX Power (±10%)	+25mA at 12V DC and +10mA at 24V DC
Dimensions (H x W x D)	Without PIR sensor 63.5 x 292.1 x 65mm - With PIR sensor 63.5 x 292.1 x79.5
Finish	SAA
Accessories	N/A

Dimensions

Without PIR sensor

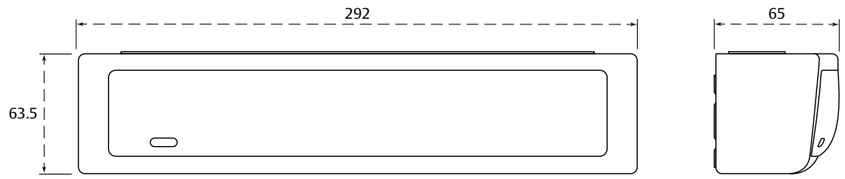

With PIR sensor

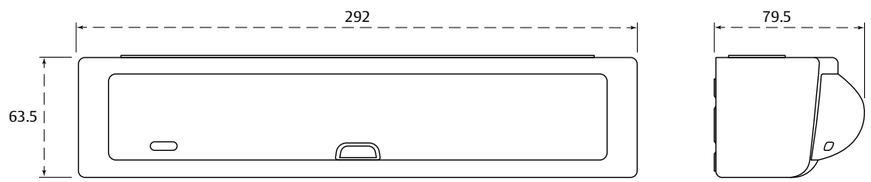

How to order

Order code	Description	Finish
M680EBDM-628	M680E EcoMag monitor and door position sensor	SAA
M680EBDM-X-628	Change to M680E EcoMag monitor and door position sensor, with integrated passive infrared request to exit	SAA

ASSA ABLOY
Opening Solutions

1354

Mini shear electromagnet, with 1500kg holding force, to facilitate remote access where minimal intrusion into the environment is required. Idea for single action internal doors or external doors, where a cover is situated above the doorway to prevent direct rain penetration.

Features and benefits

- Suitable for use on aluminium, timber and steel doors
- Can be fitted into the head or vertical locking stile
- Mortice or surface versions available
- Compact slim line design

UK CA CE 1 YEAR GUARANTEE 1500 kg HOLDING FORCE

Testing and certification

UKCA / CE marked (EMC)	Yes
Certified in compliance with	EN 61000-6-1, EN 61000-6-3
Suitable for fire doors	No
Guarantee	1 year

Specification

Holding force	1,500kg (3306lbs)
Use	Interior and entrance doors Essential to use a fully rectified and regulated PSU
Operational temperature	-20 to +40°C
Current draw	Pull in 1.5A at 12V DC and 24V DC Holding 0.5A at 12V DC and 0.4A at 24V DC
Voltage tolerance	12 - 24V DC
Monitoring	Anti-tamper monitoring of lock status using hall effect switch Volt free changeover contacts rated at 24V DC 1A for remote monitoring
Handing	Non handed
Locking gap	Distance between armature face and magnet face: 12V DC: Horizontal/vertical application - 4mm max 24V DC: Horizontal/vertical application - 5mm max
Locking tolerance	Lateral - ± 2mm. Longitudinal - ± 5mm
Locking time	Factory set at 1-2 seconds, adjustable up to 30 secs
Door gap	Maximum 8mm
Door position contacts	Built-in door position switch. For steel doors an independent door position switch must be fitted in (order 1354-0600 separately)
Retry facility	Failure to lock due to slight misalignment will result in the lock automatically retrying, up to a further 10 times, if required
Cable length	3m
Dimensions (H x W x D) magnet	Mortice version: 30 x 164 x 25mm Surface version: 38 x 200 x 38mm
Dimensions (H x W x D) armature	Mortice version: 30 x 164 x 35mm Surface version: 38 x 200 x 38mm
Finish	SAA
Accessories	See Activation devices and power supplies for items such as PTE switches, keypads and PSU's

Dimensions

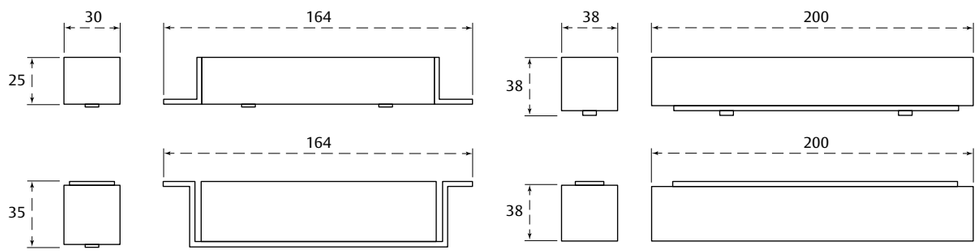

How to order

Order code	Description	Finish
1354-0100	Mortice mounted mini shearlock	SAA
1354-0102	Mortice mini shear magnet surface armature	SAA
1354-0201	Surface mounted mini shearlock	SAA

Shear aligning magnet (SAM2-24)

Highly durable, compact and concealed shear aligning electromagnet, with 272kg holding force, for smaller traffic control applications on swinging or sliding doors where installation space is tight.

Features and benefits

- Unrivalled MagnaCare® no-fault, no questions asked lifetime warranty
- Direct mounted and recessed into door frame to maintain the aesthetics of doors
- Mounting options for a single door or each leaf on a pair of doors and on sliding, in-swing, out-swing or swing-through doors
- Patented instant release circuit eliminates residual magnetism, for easy opening and closing
- Efficient and low power usage
- Automatic dual-voltage configuration with no field adjustment required
- Fully sealed tamper and weather resistant electronics
- Rust resistant with all ferrous metal surfaces plated for durability and external use
- Noise suppression with built-in MOV

Testing and certification

UKCA / CE marked (EMC)	Yes
Certified in compliance with	EN 61000-6-1, EN 61000-6-3, ANSI/UL294
Suitable for fire doors	No
Guarantee	Lifetime

Specification

Holding force	272kg (600lbs)
Use	Interior and exterior use Not for use in open channel doors
Operational temperature range	-40 to +60ºC
Current draw	84mA at 24V DC
Dimensions (H x W x D)	24 x 183 x 29mm
Finish	SSS
Conductor cable	1.8m jacketed and stranded
Accessories	N/A

Dimensions

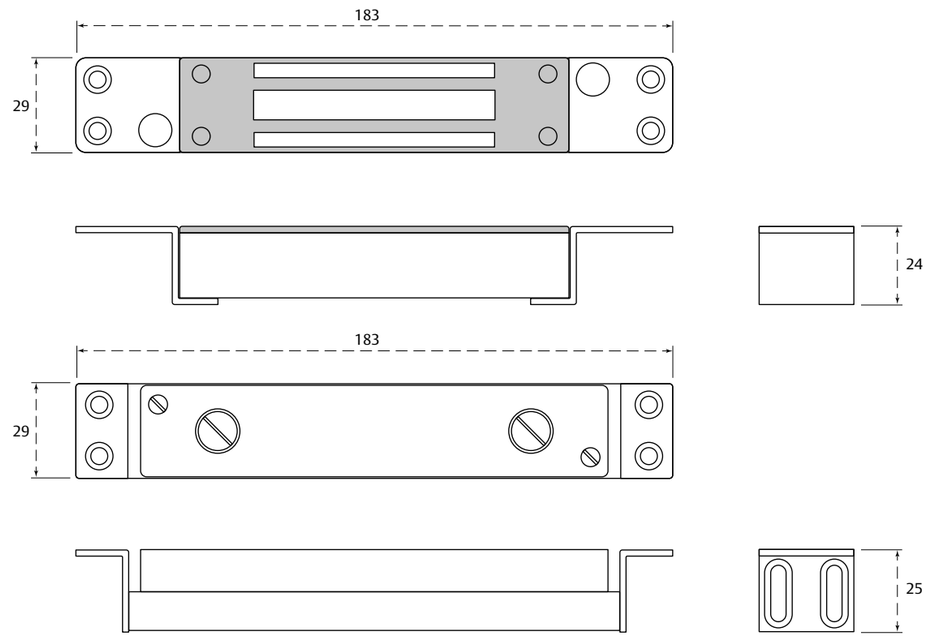

How to order

Order code	Description	Finish
SAM2-24	SAM2-24 shear aligning magnalock 600lbs 24VDC	SSS

Shear aligning magnet (SAM)

Highly durable concealed, shear aligning electromagnet, with 544kg holding force, for medium traffic control and security applications with flexible mounting accessories available.

Features and benefits

- Unrivalled MagnaCare® no-fault, no questions asked lifetime warranty
- Direct mounted and recessed into door frame to maintain the aesthetics of doors
- Mounting options for a single door or each leaf on a pair of doors and on sliding, in-swing, out-swing or swing-through doors
- Patented instant release circuit eliminates residual magnetism, for easy opening and closing
- Efficient and low power usage
- Automatic dual-voltage configuration with no field adjustment required
- Fully sealed tamper and weather resistant electronics
- Rust resistant with all ferrous metal surfaces plated for durability and external use
- Noise suppression with built-in MOV

544 kg HOLDING FORCE

Testing and certification

UKCA / CE marked (EMC)	Yes
Certified in compliance with	EN 61000-6-1, EN 61000-6-3, ANSI/UL294
Suitable for fire doors	No
Guarantee	Lifetime

Specification

Holding force	544kg (1200lbs)
Use	Interior and exterior use Not for use in open channel doors
Operational temperature	-40 to +60ºC
Current draw	320mA at 12V DC and 170mA at 24V DC
Dimensions (H x W x D)	37 x 275 x 30mm
Finish	SSS
Conductor cable	3.05m jacketed and stranded
Accessories	N/A

Dimensions

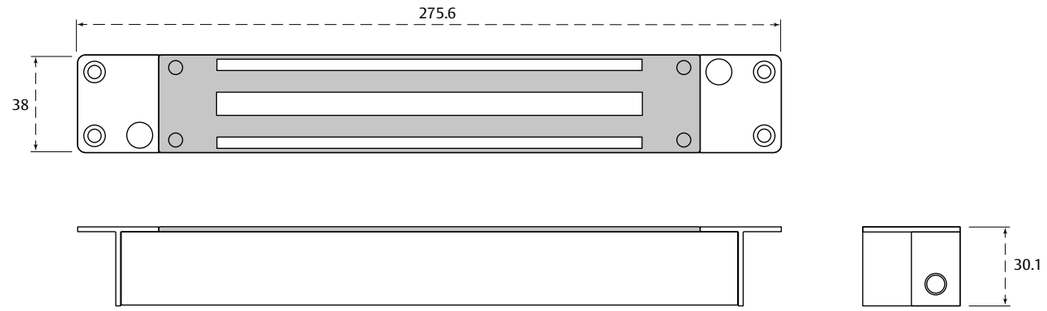

SAM magnet

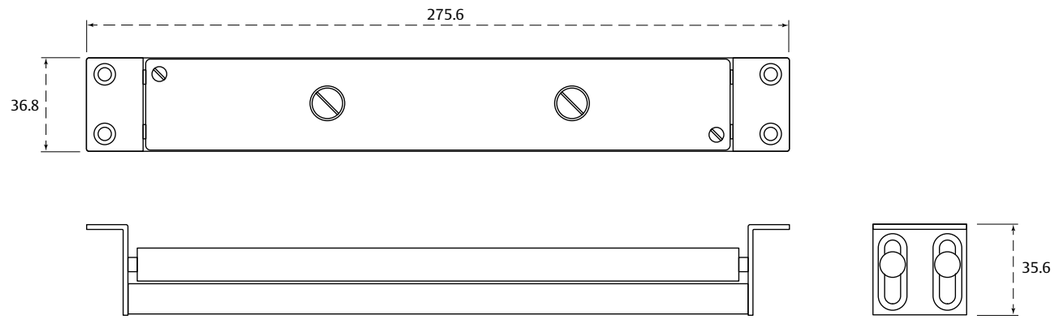

SAM strike

How to order

Order code	Description	Finish
SAMM	SAM shear aligning magnalock	SSS
SAMBM	SAM shear aligning magnalock with bondstat magnetic bond sensor	SSS
SAMBDM	SAM shear aligning magnalock with bondstat magnetic bond sensor and integrated DPS	SSS

Electric mortice locks

Electric mortice locks are used for many applications due to their security characteristics and versatility of having multiple combinations available. They are suitable for use as a night and safety-lock or as a daytime lock in doors at high security commercial sites, offices and industrial premises in conjunction with access systems.

Available in variations of hook bolt, latch and handle control options, giving you various choices for high security, high traffic areas and escape, where both reliability and security is a major consideration.

Range benefits

- An array of features and functions to suite different applications
- Standard mortice preparation depending on the backset (designed to fit within ASSA Modular or Connect lockcase mortices)
- Easily integrated into access control systems and compatible with mechanical locking safety features
- Aesthetically pleasing look on the door
- Mechanical cylinder opening is always possible

Motor locks

Our range of motor locks provide multiple functions, the main one being a built-in motor that operates the hook bolt after receiving a signal from an appropriate control device making them (unlatched version) ideal for use with automatic doors.

What's included

All motor locks in this range come in sets containing a lockcase, DAC unit*, connection cable EA226, security strike plate (1487-2 or 1487-8) and a magnet contact.

Handle-controlled motor locks

Our handle-controlled motor locks set a new standard for today and future demands for function and performance. They are multi-functional with multiple combinations and the handle control makes them ideal for escape doors.

What's included

A 'complete kit' contains a lockcase, I/O BOX 350*, connection cable EA226, security strike plate, magnet contact, surface fitted cable loop transfer and a spindle.

An 'ARX kit' contains a lockcase, connection cable EA226 and a magnet contact.

* See next page for instructions

Handle controlled lock selection guide

Lock	Dead latch	Hook bolt	Split spindle	Fixed spindle	Auto hook
813C-50	Yes	No	No	Yes	No
815C-50	Yes	No	Adjustable	No	No
820C-50	Yes	Yes, privacy function	Adjustable	Adjustable	No
825C-50	Yes	Yes, auto retract	Adjustable	Adjustable	No
835C-50	Yes	Yes	Adjustable	Adjustable	Adjustable

Key terminology

Terminology	Explanation
Hi-O (highly intelligent opening)	A scalable and future-proof system that allows all components in a door opening environment to handle access, identity control, code reading, alarms and service indicating, to be connected and controlled by IP-based technology.
Hi-O CAN bus	Connects devices together over a controller area network (CAN).
DAC (digital to analog converter)	DAC converts a digital signal from the source into an analog signal.
ARX	It is an ASSA access control system that also works on Hi-O.

Hi-O technology

The ASSA ABLOY motor lock ranges work via Hi-O technology and connect via CAN bus technology.

- Hi-O means that the units have a built-in microprocessor and communicate with each other for plug and play installation, synchronisation of door operation, monitoring and sending diagnostics
- Both the Hi-O motor and handle controlled motor locks can be connected to a Hi-O bus via the DAC 564/530
- The handle controlled motor locks can be connected to an analogue system via the I/O BOX 350

Control boxes *

DAC564/530 (for both motor and handle controlled motor locks)

- Acts as an interface for systems without Hi-O functionality, for example access control or alarm systems
- Communication with Hi-O motor and via Hi-O bus
- Communication between motor lock and DAC unit is encrypted
- Provides indications to the monitoring systems that shows the status of both lockcase and door
- Allows connection with external door position sensor
- Activates an alarm when faults are detected
- Connection to a power supply
- To be installed on the secure side of door within 10m of motor lock
- If DAC564 is integrated with an ARX access control system, a total integrated solution with great flexibility is created

I/O Box 350 (handle controlled motor locks only)

- The I/O BOX 350 allows the connection of the digital Hi-O handle controlled motor lock range (813, 815, 820, 825, 825 only) including to an analogue relay-controlled system
- Communicates between Hi-O and legacy systems
- Recognises other Hi-O products
- Connection to a power supply
- Can connect to external fire alarm system
- Used to select between the different monitoring variations
- Used to connect to a non-ARX access system
- Anti-tamper feature

ASSA ABLOY
Opening Solutions

850/851C

Encrypted motor lock mainly used as a night lock or in conjunction with doors that are rated as high security (up to RC4) in trade, office, industry, defence, and banks.

Features and benefits

- Extremely fast opening speed of approximately 0.2 seconds
- Hook bolt and lever latch designed for increased strength and side pressure
- LEDs and switches for initiation and status of the DAC and lockcase
- Can be opened with a key or thumb turn
- Built-in hidden door position sensor (magnet in the strike plate)
- Can be combined with other devices using DAC, both in Hi-O installation with ARX and stand alone, for example daytime lock, automatic doors and card readers
- Available without a lever latch making it suitable for use with automatic doors

Classification code

3 (1-3) | X (A-Y) | 8 (1-9) | E (0-F) | - (NPD) | L (0-P) | 7 (0-7) | 1 (0-1) | 3 (0-3)

EN 14846:2008

UK CA CE 1 YEAR GUARANTEE

Testing and certification

UKCA / CE marked (fire)	Yes
UKCA / CE marked (EMC)	Yes
Certified in compliance with	EN 50130-4:2011+A1:2014, EN 61000-6-1, EN 61000-6-3, EN 14846
Suitable for fire doors	Yes
Guarantee	1 year

Specification

Side load	New hook bolt and lever latch for increased strength and side pressure
Use	Interior and entrance doors
Operational temperature	-20°C to +70°C
Current draw	50 mA at idle 445 mA at 24v DC
Voltage tolerance	12 or 24v DC -5%+15%
Monitoring	Door position sensor
Duty	Fail secure
Tested to	1,500,000 cycles
Backset	35, 50mm
Dimensions (H x W x D) case	851C35 - 161 x 20 x 45mm 850C50 - 150 x 20 x 70mm 851C50 - 150 x 20 x 70mm
Dimensions (H x W x D) faceplate	851C35 - 225 x 25 x 3mm 850C50 - 225 x 25 x 4mm 851C50 - 225 x 25 x 4mm
Mechanism	Stainless steel
Door gap	3mm +/-1mm
Finish	SS
Accessories	N/A

Dimensions

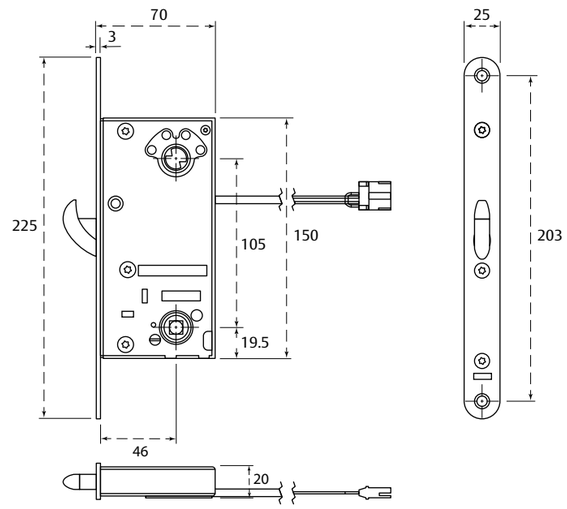

How to order

Order code	Description	Backset	Finish
705117727031	851C-35 motor hook bolt no lever latch	35mm	SS
705118727031	851C-50 motor hook bolt no lever latch	50mm	SS
705119723031	850C-50 motor sashlock with lever latch	50mm	SS

ASSA ABLOY
Opening Solutions

840/841C

Fast opening, motorized hook bolt locks which can be used as a night and safety-lock, or as a daytime lock on doors in high security (RC3) commercial, offices and industrial premises.

Features and benefits

- Extremely fast opening speed of approximately 0.2 seconds
- Hook bolt (841) and lever latch (840) are designed for increased strength and side pressure
- LEDs and switches for initiation and status of the DAC and lockcase
- Can be opened with a key or thumb turn
- Built-in hidden door position sensor (magnet in the strike plate)
- Can be combined with other devices using DAC, both in Hi-O installation with ARX and stand alone, for example daytime lock, automatic doors and card readers
- Available without a lever latch, making it suitable for use with automatic doors
- When used as night and safety-lock, doors should be supplemented with a daytime lock, such as an ASSA electric strike

Classification code

3 (1-3) | X (A-Y) | 8 (1-9) | E (0-F) | - (NPD) | L (0-P) | 5 (0-7) | 1 (0-1) | 3 (0-3)

EN 14846:2008

Testing and certification

UKCA / CE marked (fire)	Yes
UKCA / CE marked (EMC)	Yes
Certified in compliance with	EN 50130-4:2011+A1:2014, EN 61000-6-1, EN 61000-6-3, EN 14846
Suitable for fire doors	Yes
Guarantee	1 year

Specification

Side load	New hook bolt and lever latch for increased strength and side pressure
Use	Interior and entrance doors
Operational temperature	-20°C to +70°C
Current draw	50 mA at idle 445 mA at 24v DC
Voltage tolerance	12 or 24v DC
Monitoring	Door position sensor
Duty	Fail secure
Tested to	1,500,000 cycles
Backset	35, 50, 70mm
Dimensions (H x W x D) case	840C50 - 150 x 20 x70mm 840C70 - 150 x 20 x 79mm 841C35 - 161 x 20 x 45mm 841C50 - 150 x 20 x 70mm 841C70 - 150 x 20 x 79mm
Dimensions (H x W x D) faceplate	225 x 22 x 3mm
Mechanism	Stainless steel
Door gap	3mm +/-1mm
Finish	SS
Accessories	N/A

Dimensions

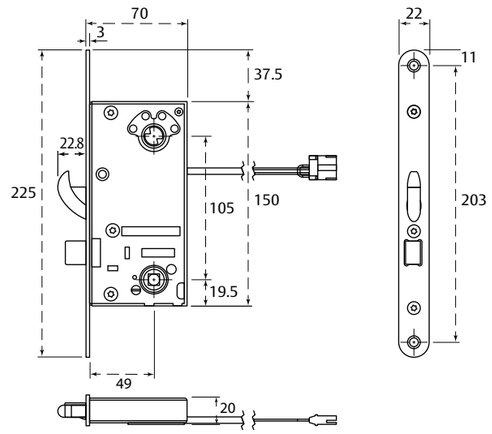

How to order

Order code	Description	Finish
705116723031	840C-50 motor sashlock with lever latch	SS
705148723031	840C-70 motor sashlock with lever latch	SS
705126727031	841C-35 motor hook bolt 35mm back set no lever latch	SS
705115727031	841C-50 motor hook bolt 50mm back set no lever latch	SS
705147727031	841C-70 motor hook bolt 70mm back set no lever latch	SS

Handle-controlled motor lock – 813C-50

Electromechanical lockcase with deadlatch. Deadlatching handles on both sides are electronically activated by a signal from the access control system, code lock or similar; alternatively, the inside handle can be activated by a request to exit button.

Features and benefits

- Electronically controlled inside and outside (fixed spindle)
- Lock can be adjusted for right or left hung doors
- Lock can be opened with a key or thumb turn
- Includes reversible deadlatch
- Can be adjusted to work as 815C-50
- Status indication on the Hi-O bus and via relay on I/O BOX

Classification code

3	X	8	F	-	L	1	1	3
(1-3)	(A-Y)	(1-9)	(0-F)	(NPD)	(0-P)	(0-7)	(0-1)	(0-3)

EN 14846:2008

UK CA CE 1 YEAR GUARANTEE

Testing and certification

UKCA / CE marked (fire)	Yes
UKCA / CE marked (EMC)	Yes
Certified in compliance with	SSF 3522-1093 class 1, EN 14846
Suitable for fire doors	Yes
Guarantee	1 year

Specification

Use	Interior and entrance doors
Operational temperature	-20ºC to +70ºC
Current draw	50 mA at idle 445 mA at 24v DC
Voltage tolerance	12 or 24V DC
Monitoring	Dead latching, error, door forced, door status indication
Duty	Fail safe or fail secure selectable
Tested to	1,500,000 cycles
Backset	50mm
Dimensions (H x W x D) case	150 x 20 x 71mm
Dimensions (H x W x D) faceplate	225 x 22 x 3mm
Mechanism	Stainless steel
Door gap	3mm +/-1mm
Finish	SS
Accessories	N/A

Dimensions

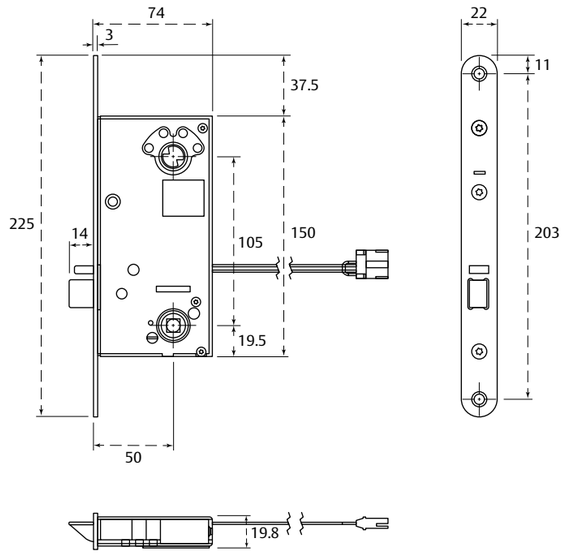

How to order

Order code	Description	Finish
705198127031	813C-50 complete kit	SS
705198117031	813C-50 ARX kit	SS
705198107031	813C-50 lock housing only	SS

Handle-controlled motor lock – 815C-50

Electromechanical lockcase with deadlatch. The handle on the outside is electronically activated by a signal from the access control system, code lock or similar; the handle on the inside is mechanically operated so no push button needs to be connected.

Features and benefits

- Lock can be opened with a key or thumb turn
- Lock function can be adjusted for right/left, in/out
- Electronically controlled outside, mechanically connected inside (split spindle)
- The re-entry function can be activated via I/O BOX 350 with a signal from an evacuation/fire alarm
- Includes reversible deadlatch
- Can be adjusted to work as 813C-50
- Status indication on the Hi-O bus and via relay on I/O BOX 350

Classification code

3 (1-3) | X (A-Y) | 8 (1-9) | F (0-F) | - (NPD) | L (0-P) | 1 (0-7) | 1 (0-1) | 3 (0-3)

EN 14846:2008

Testing and certification

UKCA / CE marked (fire)	Yes
UKCA / CE marked (EMC)	Yes
Certified in compliance with	SSF 3522-1093 class 1, SS-EN 179, only when combined with ASSA ABLOY emergency exit hardware 179J (available separately), EN 14846
Suitable for fire doors	Yes
Guarantee	1 year

Specification

Use	Indoor and entrance doors
Operational temperature	-20ºC to +70ºC
Current draw	50 mA at idle 445 mA at 24v DC
Voltage tolerance	12 or 24V DC
Monitoring	Dead latching, inside handle, error, door forced, door status indication
Duty	Fail safe or fail secure changeable on site
Tested to	1,500,000 cycles
Backset	50mm
Dimensions (H x W x D) case	150 x 20 x 71mm
Dimensions (H x W x D) faceplate	225 x 22 x 3mm
Mechanism	Stainless steel
Door gap	3mm +/-1mm
Finish	SS
Accessories	N/A

Dimensions

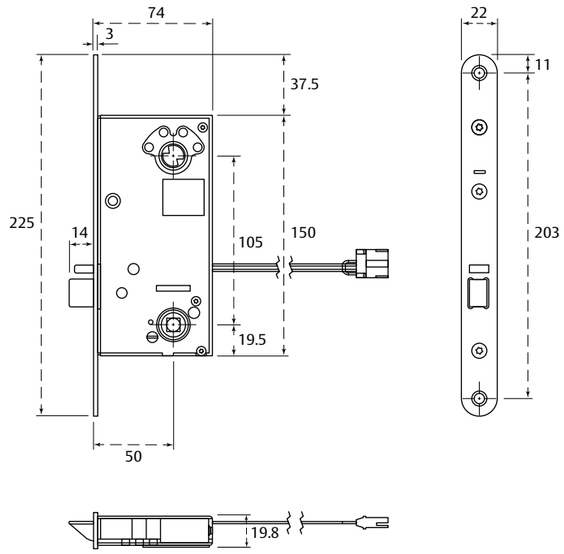

How to order

Order code	Description	Finish
705197127031	815C-50 complete kit	SS
705197117031	815C-50 ARX kit	SS
705197107031	815C-50 lock housing only	SS

ASSA ABLOY
Opening Solutions

Handle-controlled motor lock – 820C-50

Electromechanical lockcase with deadlatch, hook bolt and an added privacy function.

Features and benefits

- Electronically controlled outside, mechanically connected inside (split spindle), or electronically controlled outside and inside (fixed spindle)
- The hook bolt is thrown and withdrawn manually by the cylinder or thumb turn
- Includes privacy function setting
- Lock can be opened with a key or thumb turn
- The re-entry function can be activated via I/O BOX 350 with a signal from an evacuation/fire alarm
- Simple to reverse the electrically/mechanically operated side
- Status indication on the Hi-O bus and via relay on I/O BOX

Classification code

3 (1-3) | X (A-Y) | 8 (1-9) | F (0-F) | - (NPD) | L (0-P) | 3 (0-7) | 1 (0-1) | 3 (0-3)

EN 14846:2008

UK CA CE 1 YEAR GUARANTEE

Testing and certification

UKCA / CE marked (fire)	Yes
UKCA / CE marked (EMC)	Yes
Certified in compliance with	SSF 3522-1093 class 1, EN 14846
Suitable for fire doors	Yes
Guarantee	1 year

Specification

Use	Interior and entrance doors
Operational temperature	-20°C to +70°C
Current draw	50 mA at idle 445 mA at 24v DC
Voltage tolerance	12 or 24V DC
Monitoring	Dead latching, latch out, latch in, inside handle, error, door forced, door status indication
Duty	Fail safe or fail secure, changeable on site
Tested to	1,500,000 cycles
Backset	50mm
Dimensions (H x W x D) case	150 x 20 x 71mm
Dimensions (H x W x D) faceplate	225 x 22 x 3mm
Mechanism	Stainless steel
Door gap	3mm +/-1mm
Finish	SS
Accessories	N/A

Dimensions

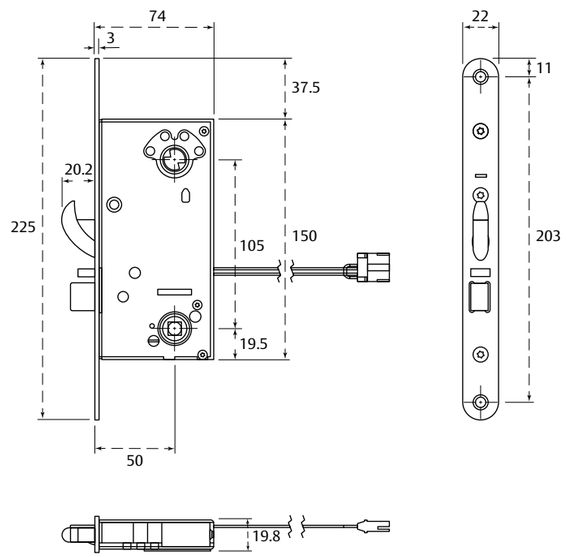

How to order

Order code	Description	Finish
705196127031	820C-50 complete kit	SS
705196117031	825C-50 ARX kit	SS
705196107031	825C-50 lock housing only	SS

Handle-controlled motor lock – 825C-50

Electromechanical lockcase with deadlatch and hook bolt, that offers increased holding force.

Features and benefits

- Electronically controlled outside, mechanically connected inside (split spindle), or electronically controlled outside and inside (fixed spindle)
- Hook bolt is withdrawn by the cylinder or thumb turn
- Auto retract, the hook bolt is retracted when the handle is activated
- Lock can always be opened with a key or thumb turn, hook bolt mechanical locking which can be overridden internally via handle for exit
- Hook bolt provides increased holding force connecting the door and frame, providing extra strong burglar resistance
- Re-entry function can be activated via I/O BOX 350 with a signal from an evacuation/fire alarm
- Can be adjusted to work as 813C-50, 815C-50
- Status indication on the Hi-O bus and via relay on I/O BOX 350

Classification code

3	X	8	F	-	L	3	1	3
(1-3)	(A-Y)	(1-9)	(0-F)	(NPD)	(0-P)	(0-7)	(0-1)	(0-3)

EN 14846:2008

UK CA CE 1 YEAR GUARANTEE

Testing and certification

UKCA / CE marked (fire)	Yes
UKCA / CE marked (EMC)	Yes
Certified in compliance with	SSF 3522-1093 class 2/2B, SS-EN 179, only when combined with ASSA ABLOY emergency exit hardware 179J (available separately), EN 14846
Suitable for fire doors	Yes
Guarantee	1 year

Specification

Use	Interior and entrance doors
Operational temperature	-20°C to +70°C
Current draw	50 mA at idle 445 mA at 24v DC
Voltage tolerance	12 or 24V DC
Monitoring	Dead latching, latch out, latch in, inside handle, error, door forced, door status indication
Duty	Fail safe or fail secure, changeable on site
Tested to	1,500,000 cycles
Backset	50mm
Dimensions (H x W x D) case	150 x 20 x 71mm
Dimensions (H x W x D) faceplate	225 x 22 x 3mm
Mechanism	Stainless steel
Door gap	3mm +/-1mm
Finish	SS
Accessories	N/A

Dimensions

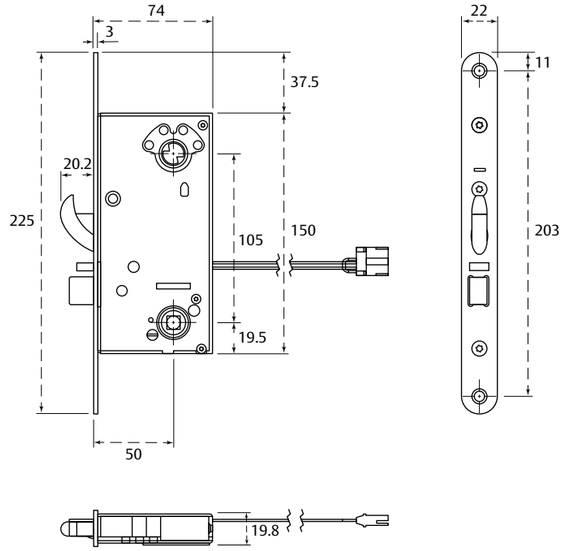

How to order

Order code	Description	Finish
705195127031	825C-50 complete kit	SS
705195117031	825C-50 ARX Kit	SS
705195107031	825C-50 lock housing only	SS

Handle-controlled motor lock – 835C-50

Electromechanical lockcase with deadlatch and hook bolt, that offers increased holding force. The hook bolt can be automatically thrown when the door is closed.

Features and benefits

- The handle is electronically controlled outside, mechanically connected inside (split spindle), or electronically controlled outside and inside (fixed spindle)
- Auto hook, the hook bolt is thrown automatically when the door is closed but can also be disengaged and operated manually by handle operation
- Lock can be opened with a key/thumb turn
- The hook bolt provides increased holding force connecting the door and frame, providing extra strong burglar resistance
- Re-entry function can be activated via I/O BOX 350 with a signal from an evacuation/fire alarm
- Simple to reverse the electrically/mechanically operated side
- Can be adjusted to work as 813C-50, 815C-50, 825C-50
- Status indication on the Hi-O bus and via relay on I/O BOX 350

Classification code

3 (1-3) | X (A-Y) | 8 (1-9) | F (0-F) | - (NPD) | L (0-P) | 5 (0-7) | 1 (0-1) | 3 (0-3)

EN 14846:2008

UK CA CE 1 YEAR GUARANTEE

Testing and certification

UKCA / CE marked (fire)	Yes
UKCA / CE marked (EMC)	Yes
Certified in compliance with	SSF 3522-1093, class 2/2B, SS-EN 179, only when combined with ASSA ABLOY emergency exit hardware 179J (available separately), EN 14846
Suitable for fire doors	Yes
Guarantee	1 year

Specification

Use	Interior and entrance doors
Operational temperature	-20ºC to +70ºC
Current draw	50 mA at idle 445 mA at 24v DC
Voltage tolerance	12 or 24V DC
Monitoring	Dead latching, latch out, latch in, inside handle, error, door forced, door status indication
Duty	Fail safe or fail secure changeable on site
Tested to	1,500,000 cycles
Backset	50mm
Dimensions (H x W x D) case	150 x 20 x 71mm
Dimensions (H x W x D) faceplate	225 x 22 x 3mm
Mechanism	Stainless steel
Door gap	3mm +/-1mm
Finish	SS
Accessories	N/A

Dimensions

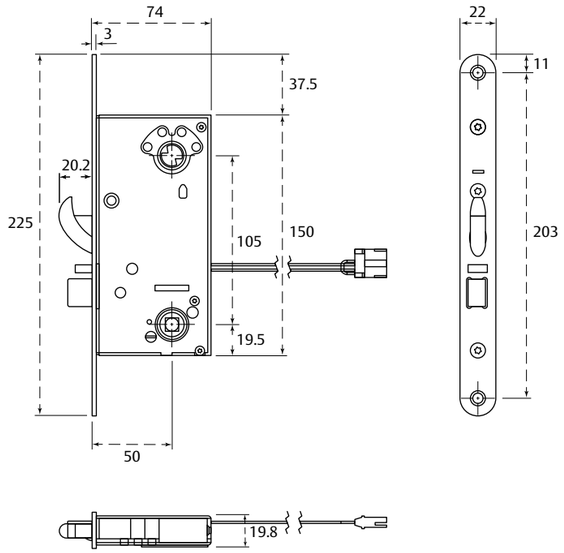

How to order

Order code	Description	Finish
705194127031	835C-50 complete kit	SS
705194117031	835C-50 ARX Kit	SS
705194107031	835C-50 lock housing only	SS

Activation devices and power supplies

Access control systems and electromagnetic locking require power supplies and the appropriate accessories to function. Our range consists of the following item type:

Push button and egress devices

Used to activate the lock or device.

Power transfers

A way to protect wires and safely supply power to on-door devices like locks.

Power supplies

A range of regulated linear type power supplies offering various options from 12 to 24v and 1 to 5 amp output.

Types of products included

- Sensor switches
- Egress buttons
- Break glass unit
- Power loops
- Concealed electric power transfer
- Power supplies

Wave sense switch

A new class of motion sensing technology for hands-free, contactless switch activation.

Features and benefits

- Touchless activation for hands-free operation, reduces transmission of germs
- Use for request to exit (REX), activation or on/off switching to trigger a variety of access control device, in place of a push plate or push button
- Active microwave motion sensing using doppler radar that is more reliable than infrared sensors
- Adjustable sensing zone from 4" to 24" (102mm to 610mm) helps screen out incidental traffic
- Pulse mode to initiate action or toggle mode to provide on/off switch
- Mounting ring included for installation into standard plastic or metal gang box
- Water-resistant foam gasket included

Specification

Use	Interior use
Operational temperature	-20°C to +55°C
Current draw	Less than 1.5W (125 mA at 12 VDC) 1A SPDT contact can be operated in toggle or pulse mode. Pulse output: 0.5 seconds
Voltage tolerance	Self-sensing 12 or 24v DC or AC input (± 10%)
Dimensions (H x W)	Single gang faceplate 114 x 70mm, Double gang faceplate 114 x 114mm
Finish	White
Accessories	Please see electromechanical accessories for items such as weather box and weather cover

Testing and certification

UKCA / CE marked (EMC)	Yes
Guarantee	Lifetime

How to order

Order code	Description	Finish
WSS-WSD	WSS-WSD includes both the single and double gang faceplates	White

NTS-1

Allows hands free activation designed to reduce the risk of contamination for sensitive applications including bathrooms, hospitals, labs, schools, and offices.

Features and benefits

- Stainless steel with vandal resistant face plate
- Sensor detection range up to 4"
- Bi-colour Halo LED status indicates active status
- Plate printed 'Wave to Open'
- Time delay can be set for 1 to 35 seconds, ideal if other products are timed

Specification

Use	Interior use
Operational temperature	-25°C to +55°C
Current draw	SPDT relay rated 2A at 30 VDC/VAC
Voltage tolerance	12 or 24v DC
Dimensions (H x W)	Single gang – 114 x 70mm, double gang – 114 x 114mm, narrow stile – 114 x 44.5mm
Finish	SS

Testing and certification

UKCA / CE marked (EMC)	Yes
Guarantee	Lifetime

How to order

Order code	Description	Finish
NTS-1	Single gang wall plate (114 x 70mm)	SS
NTS-2	Double gang wall plate (114 x 114mm)	SS
NTS-3	Narrow stile wall plate (114 x 44.5mm)	SS

Surface mounted green dome exit button

Exit button used to break or complete the circuit for activation of various devices.

Features and benefits

- High impact, sturdy design
- Normally open/closed changeover contacts
- Momentary operation when pressed
- Facilitates escape
- Easy visual recognition

Specification

1 YEAR GUARANTEE

Use	Interior use
Voltage use	For low voltage use only
Voltage tolerance	Contact rating: 2A @ 12Vdc
Dimensions (H x W x D) case	86 x 86 x 38mm
Dimensions (dome)	35mm diameter
Finish	SS

Testing and certification

UKCA / CE marked (EMC)	N/A
Guarantee	1 year

How to order

Order code	Description	Finish
AA-SPB004S	Surface mounted green dome button	SS

EL surface mounted narrow stile egress switch

Narrow stile surface mounted egress switch with a small flush button for a sleek finish.

Features and benefits

- For narrow stile applications
- Offers good vandal resistance
- Normally open/closed changeover contacts (SPST)
- Momentary operation when pressed

Specification

UK CA CE 1 YEAR GUARANTEE

Use	Interior use
Voltage use	For low voltage use only
Voltage tolerance	Contact rating: 2A @ 12Vdc
Dimensions (H x W x D) case	85 x 40 x 40mm
Dimensions (dome)	19mm diameter
Finish	SS

Testing and certification

UKCA / CE marked (EMC)	Yes
Guarantee	1 year

How to order

Order code	Description	Finish
AA-SPB002NS	Surface mounted narrow stile press to exit button	SS

Break glass

Double pole break glass unit for emergency door release which can be surface or flush mounted.

Features and benefits

- Double pole with double poll throw contacts
- Can be surface or flush mounted
- Breakable glass element must be replaced after each activation
- Facilitates emergency escape
- Transparent hinged cover available

Specification

1 YEAR GUARANTEE

Use	Interior use
Dimensions (H x W x D) case	86 x 86 x 51mm, including back box
Finish	Green
Accessories	See power supplies accessories for items such as replacement glass, transparent hinged cover and reset key

Testing and certification

UKCA / CE marked (EMC)	N/A
Guarantee	1 year

How to order

Order code	Description	Finish
AA-KGG200SG	Surface mount double pole break glass unit	Green

Armoured surface mount door loops

A neat and secure way of transferring power and control cables to the door leaf.

Features and benefits

- Transfers power or data cables to on-door devices
- Cast aluminium alloy ends
- Flexible armoured conduit
- Fixing screws included
- Armoured for greater protection

Specification

1 YEAR GUARANTEE

Use	Interior use
Dimensions (L x D)	500 x 10mm
Finish	ALU

Testing and certification

UKCA / CE marked (EMC)	N/A
Guarantee	1 year

How to order

Order code	Description	Finish
AA-SPDL03	500mm/10mm surface door loop	ALU

Concealed electrical power transfer

Heavy-duty, tamper-resistant concealed electrical power transfer (CEPT) securely transfers power and data, from the hinge side of the frame to electrified hardware on the door.

Features and benefits

- Unit is discreetly concealed between frame and door when the door is closed and complements any architectural setting
- Mortises into the edges of the door and frame
- Tamper resistant
- All metal construction including back boxes
- 7/8" [22.25mm] knockouts on back boxes accommodate EMF-type fittings
- Compatible with butt hinges up to 6" [152.4mm] and continuous hinges with cut out

Specification

Use	Interior use
Tested to	1,000,000 cycles
Dimensions (H x W x D)	229 x 30.5 x 26mm
Finish	SS, SB

Testing and certification

UKCA / CE marked (EMC)	N/A
Guarantee	Lifetime

How to order

Order code	Description	Finish
CEPT-10	Concealed power transfer 10 wire	SS
CEPT-10-04	Concealed power transfer 10 wire	SB
CEPT-NW	Concealed power transfer without wires	SS

Standard series power supply

General purpose linear regulated 12 or 24v DC power supply with LED indicators.

Features and benefits

- High level of regulation and stabilisation
- Three LED indicators for mains present, fuse blown or battery fault
- Manual battery test button accessible from outside the enclosure
- Dual options available with AC/DC outputs
- Battery charging circuit current limited
- Variable potentiometer on PCB for precise output voltage adjustment

Specification

Use	Interior use
Voltage tolerance	12 or 24v DC
Output	1 or 2 Amp
Dimensions (H x W x D)	Vertical – 345 x 225 x 80mm, Compact – 235 x 210 x 90mm
Finish	PPC White

Testing and certification

UKCA / CE marked (EMC)	Yes
Certified in compliance with	EN 62368.1
Guarantee	1 year

How to order

Order code	Description	Finish
10189900000	12VDC 1 Amp single output power supply (compact case)	White
10190000000	12VDC 2 Amp single output power (compact case)	White
10190100000	24VDC 1 Amp single output power (vertical case)	White
10408400000	24VDC 2 Amp single output power (vertical case)	White

Professional series power supply

Fully monitored linear regulated 12 or 24v DC power supply with LED indicators, giving 15 status indicators.

Features and benefits

- Fifteen separate status indications by LED on front panel
- Individual warning relay inputs and outputs for AC failure, low voltage, fuse blown or battery fault (low or disconnected)
- Independent battery charging circuit separate from main DC output
- Battery deep discharge cut-off feature
- Programming options for automatic battery test frequency, duration and battery type (optimises charge rate)

Specification

Use	Interior use
Voltage tolerance	12 or 24v DC
Output	from 1 – 5 Amps
Dimensions (H x W x D) case	Vertical 345 x 225 x 80mm, Large 400 x 300 x 110mm
Finish	White

Testing and certification

UKCA / CE marked (EMC)	Yes
Certified in compliance with	EN 62368.1
Guarantee	1 year

How to order

Order code	Description	Finish
10119700000	12VDC 3 Amp power supply unit single output (vertical case)	White
10119800000	12VDC 3 Amp FMR power supply Unit 5 fused outputs (large case)	White
10119900000	12VDC 5 Amp FMR power supply Unit 5 fused outputs (Large case)	White
10120000000	24VDC 3 Amp power supply single output (vertical case)	White
10120100000	24VDC 3 Amp power supply single output (vertical case)	White

Electromechanical locking accessories

Types of accessories you will find include

- Z and L brackets
- Dress plates
- Intumescent kits
- Sub cover extensions
- Face plates
- Lip extensions

Electromagnetic locks

Products: 261, 262, 281

Product code	Description	Details	Compatible with	Finish	Image
261-900	Rim armature housing	• For flush mounting of armature plate into timber door core • Suits outward opening applications • For use where it is preferable to not drill a hole through the door (e.g. fire doors)	261	SA	
281-900	Rim armature housing		281	SA	
263-005-2-9	2 metre housing for 262 magnet		262	SA	
261-700	261 adjustable L bracket	• Adjustable L bracket for outward opening doors where there is insufficient space to fit the magnet to the head of the door frame • Z and L bracket for inward opening door	261	SA	
261-701	261 adjustable L bracket with cover		261	SA	
261-800	261 Z and L bracket		261	SA	
261-801	261 Z and L bracket with cover		261	SA	
281-700	281 adjustable L bracket		281	SA	
281-701	281 adjustable L bracket with cover		281	SA	
281-800	281 Z and L bracket		281	SA	

Product code	Description	Details	Compatible with	Finish	Image
281-801	281 Z and L bracket with cover	• Adjustable L bracket for outward opening doors where there is insufficient space to fit the magnet to the head of the door frame • Z and L bracket for inward opening door	281	SA	
291-800	291 magnet Z bracket kit		291	SAA	

Products: M32, M62, M82, M38, M68

Product code	Description	Details	Compatible with	Finish	Image
ZA-32/62BK	Adjustable Z-bracket – M32/62	• For use on in-swing doors with electromagnet 'F' options (215.9mm overall length) • Provides 31.75mm of lateral movement • Includes dress cover	M32, M62	BAA	
ZA-32/62CL			M32, M62	SAA	
ZA-32/62SS			M32, M62	SS	
ZA-82BK			M82	BAA	
ZA-82CL			M82	SAA	
ZA-82SS			M82	SS	

ASSA ABLOY
Opening Solutions

Products: M32, M62, M82, M38, M68

Product code	Description	Details	Compatible with	Finish	Image
ASB-32BK	Aluminium frame spacer bracket	• For use when a blade stop requires the electromagnet to be lowered • Pre-drilled for the mounting bolts and wire • Provides a blind nut for surface installation of the strike	M32	BAA	
ASB-32CL			M32	SAA	
ASB-62BK			M62	BAA	
ASB-62CL			M62	SAA	
ASB-82BK2			M82	BAA	
ASB-82CL			M82	SAA	
ASCWB-DM62CL	Aluminium 1-1/2" [38.1mm] spacer – concrete or wood bracket		DM62	SAA	
CWB-32BK	Concrete or wood bracket	• Provides a concealed wire chamber	M32	BAA	
CWB-32CL			M32	SAA	
CWB-62BK			M62	BAA	

Product code	Description	Details	Compatible with	Finish	Image
CWB-62CL	Concrete or wood bracket	• Provides a concealed wire chamber	M62	SAA	
CWB-82BK			M82	BAA	
CWB-82CL			M82	SAA	
AOS-62	Offset strike plate	• Alters the position of the mounting hole by 6mm	M62	BSS	
AOS-62D			M62	BSS	
AOS-82			M82	BSS	
EASB-32	Energy absorbing sex bolt	• For high-security applications on inflexible doors	M32	N/A	
EASB-62			M62	N/A	
EASB-82			M82	N/A	

ASSA ABLOY
Opening Solutions

Product code	Description	Details	Compatible with	Finish	Image
ASS-32	Strike plate – split set with fasteners and Sex bolt	• Allows a single Magnalock to secure a double door at traffic control holding force level	M32	BSS	
ASS-62			M62	BSS	
ASS-82			M82	BSS	
TDK-1	Upgrade kit for thick doors	• Replacement screws pack to enable armature plates to be used on doors between 44mm and 76mm thick	M32, M62, M82, M38, M68	N/A	
SASM	Securitron shock absorbing strike mount	• Provided as standard with M62FG	M32, M62, M82	BSS	

Code locks

Product code	Description	Compatible with	Finish	Image
J8607CG5-IK	Intumescent kit for installing on timber 30/60 fire doors	CodeGUARD5	N/A	
CHD-8821	Code handle battery lid cover	Code handle round rose	SS	
CHD-8820	Code handle 7.5mm distance spacer ring	Code handle round rose	SS	
10015000000	Codoor 9V lithium battery	Codoor CD30	N/A	
WBB	Weather box	DK12, DK16	BLK	
WCC	Weather box cover	DK12, DK16	N/A	
101686600000	309 horseshoe spring	CD30	BLK	

ASSA ABLOY
Opening Solutions

Speciality and solenoid bolts

Product code	Description	Compatible with	Finish	Image
228250-000	EB25 short strike plate right hand	TB25	SS	
228250-002	EB25 long strike plate right hand		SS	
Additional accessories available on request				
SD-218000-000	ES8000 glass door kit	ES8000	SS	
ES8000-IK-FD30	Intumescent kit for FD30 fire door	ES8000	N/A	
ES8000-IK-FD60	Intumescent kit for FD60 fire door		N/A	

Electric strikes

Product code	Description	Compatible with	Finish	Image
LEK7400-50	Sub cover extension to suit 34.9mm gap	7400 and 7401	BLK	
LEK7400-04	Sub cover extension to suit 47.8mm gap		BLK	
LEK7400-05	Sub cover extension to suit 50mm gap		BLK	
LEK7400-06	Sub cover extension to suit 54.1mm gap		BLK	
LEK7400-07	Sub cover extension to suit 57.2mm gap		BLK	
LEK7400-08	Sub cover extension to suit 60.5mm gap		BLK	
WDC7400	Door cover for timber doors		BLK	

Sub cover guide (7400 & 7401):

1. To select correct sub cover size, measure from centre strike to edge of the jamb
2. Select door cover if installation on timber doors

ASSA ABLOY
Opening Solutions

Product code	Description	Compatible with	Finish	Image
220110-502	15mm extension lip	ES110 series	BLK	
220110-503	25mm extension lip		BLK	
220110-504	50mm extension lip		BLK	
220200-518	Mounting kit		N/A	
210100-544	Faceplate - 123.7 x 32 x 3mm (ANSI Short)		SS	
210100-530	Faceplate - 201.6 x 36.3 x 3mm (ANSI Long)		SS	
220200-505	25mm extension lip	ES2100 series - ES2000, 2100, 9000	BLK	
220200-506	50mm extension lip		BLK	
220200-507	75mm extension lip		BLK	
220200-505	25mm extension lip		SS	
220200-506	50mm extension lip		SS	

Product code	Description	Compatible with	Finish	Image
930100031	Faceplate no. 930 Size 245(h) x 40(w) x 3(d)mm	900, 910, 911, 920 series 960, 961 series	SS	
930T100031	Faceplate no. 930T Size 245(h) x 40(w) x 3(d)mm		SS	
980100031	Faceplate no. 980 Size 245(h) x 50(w) x 3(d)mm		SS	
93117100031	Faceplate no. 931-17 Size 245(h) x 42(w) x 3(d)mm		SS	
93120100031	Faceplate no. 931-20 Size 245(h) x 45(w) x 3(d)mm		SS	
93126100031	Faceplate no. 931-26 Size 245(h) x 51(w) x 3(d)mm		SS	
932100031	Faceplate no. 932 Size 245(h) x 40(w) x 3(d)mm		SS	
932T100031	Faceplate no. 932T Size 245(h) x 40(w) x 3(d)mm		SS	

ASSA ABLOY
Opening Solutions

Product code	Description	Compatible with	Finish	Image
93317100031	Faceplate no. 933-17 Size 245(h) x 42(w) x 3(d)mm	900, 910, 911, 920 series 960, 961 series	SS	
93320100031	Faceplate no. 933-20 Size 245(h) x 45(w) x 3(d)mm		SS	
93326100031	Faceplate no. 933-26 Size 245(h) x 51(w) x 3(d)mm		SS	
94872100031	Faceplate no. 9487-2 Size 200(h) x 40(w) x 3(d)mm		SS	
94873100031	Faceplate no. 9487-3 Size 200(h) x 43.5(w) x 3(d)mm		SS	
94874100031	Faceplate no. 9487-4 Size 200(h) x 45(w) x 3(d)mm		SS	
50505020057	Faceplate 5 • Recommended for metal or uPVC door frames of non-standard thickness • Wide mouth to suit non-ASSA locks	14E, 114A, 514E, 5114A	SS	
50505220057	Faceplate 505 • Recommended for metal or uPVC door frames of non-standard thickness		SS	
50510020057	Faceplate 10 • Wrap-around faceplate for added strength, suitable for wooden frames • Wide mouth to suit non-ASSA locks		SS	
50510220057	Faceplate 510 • Wrap-around faceplate for added strength, suitable for wooden frames		SS	

Activation devices and power supplies

Product code	Description	Compatible with	Finish	Image
WBB	Weather back box for single gang (WSS only)	Wave sense switch	SF	
WCC	Weather cover, clear for single gang (WSS only)		Clear	
KG1	KGG replacement break glass 5no	Break glass	N/A	
AA-MX03	Transparent hinged cover for KGG green break glass		N/A	
AA-KGG-KEY	KGG Reset key available		BLK	

Access control

Introduction	810
Legislation	813
Incedo™ Business	815
Aperio®	829
SMARTair	845

Access control

ASSA ABLOY offers a range of digital access control solutions to meet almost any requirement. We can provide flexible, scalable, and compliant security solutions to help control the movement of people in a wide range of building types and applications.

The range includes Incedo™, Aperio® and SMARTair, which can be combined in a number of ways to create a bespoke access control system, designed specifically for an organisation's needs.

Our specialist team offers a full service. This includes specifing which digital products will best suit your needs from the comprehensive range of hard wired and wire-free locking solutions, digital key-based systems, and scalable EAC solutions.

In addition, we support our clients with training sessions, demonstrations and customer insight days held at our bespoke learning facility to help educate attendees on the benefits of digital access control.

Key features

- Wireless locking solutions
- Bluetooth low energy mobile credentials
- Cost effective
- Integrated access control without wires
- Flexible access control systems
- Large range of locking devices

Parts of an access control solution

Software

These are the digital application and management tools that allow access rights to be granted or denied, verify approved access, record use and control access to secure areas within the building. These can come as an integrated controller, cloud software or used directly on a server PC.

Digital access control management software (Incedo™, SMARTair TS1000)

Incedo™ embedded software solution

SMARTair TS100 management software

Locking device firmware updates

Hardware

This consists of the physical touchpoints used to control access to various areas. These come in a number of hardware configurations, and can be adapted to fit the door specification.

Controller

Wireless Hub

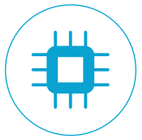

Wired door module

Locking devices (locks, handles, padlocks, cylinders)

Considerations for selecting the right access control

Do I need to run wires to each door?

Not every door needs to be hard-wired. In low traffic or harder to reach areas, a wireless addition to a new or existing access control system can be the perfect solution for cost-effective wireless access.

Do I need every door to be an online door?

Not every door needs to be online. With Offline and Update on Card features you can eliminate both the wires and the wireless hubs and still retain complete control over your premises.

What do we use the locking point for?

Whether it's a door on an escape route, an external access point or even a perimeter gate, understanding the characteristics of the locking point is critical. For compliant solutions we have a range of emergency and panic escape packages and electrically controlled emergency escape and fire tested products. For perimeters and hatches we have a range of access control padlocks and even cabinets and cases can be secured with our digital key systems.

Types of digital access control software

Embedded management software

Incedo™ combines access control and security hardware with your choice of software in one scalable embedded management software. This means there is no need for a dedicated PC to run the software, it can be ran both locally with the Lite configuration and also remotely via a web based cloud interface.

Management software

Our intuitive management software, SMARTair TS1000, runs on a dedicated PC and allows facility managers full control to identify and update exactly who can open every door. The user-friendly interface is accessible from almost any standard PC, tablet or smartphone and gives an instant overview of the site's security status.

Access control hardware

	Aperio®	SMARTair	Incedo™
High security wireless electric locks	L100	iVolution	N/A
Escutcheons	E100	iMax, legacy escutcheon	N/A
Handles	H100		N/A
Cylinders	C100	Knob cylinder	N/A
Wireless hubs	RS485 hub IP hub Wiegand	SMARTair wireless hub	N/A
Hard wired doors	N/A	Wall reader	ASSA ABLOY reader and reader module
Padlocks	N/A	iGate padlock	N/A
Door controllers	N/A	N/A	CP5 – RS485/ OSDP M50 – RS485 M70 – OSDP
Credentials	- RFID - iClass - MiFare desfire - SEOS - MiFare classic - SEOS mobile BLE	- RFID - Secure RFID - BLE mobile credentials	Dependant on locking devices used. Compatible with: - RFID - iClass - MiFare desfire - SEOS - MiFare classic - SEOS mobile BLE

Legislation

EN 15684 - Building hardware – Mechatronic cylinders

This standard applies to cylinders often used in the built environment. It also applies to cylinders for use with other hardware products such as exit devices, door operators, etc. or monitoring facilities and alarm systems.

It establishes categories of use based on performance tests and grades of security based on design requirements and on performance tests that simulate attack.

This document includes assessment of additional features when they are included in the cylinder design.

Other important legislation

Due to the nature of access control the various solutions offered can often be tested in accordance with elements of other standards already covered in this manual such as;

- EN 1906 – Door furniture
- EN 14846 – Electromechanically operated locks and striking plates
- EN 1125 – Panic exit devices
- EN 12209 – Locks, latches and locking plates

Further legislation and certification information can be found in the Standards and legislation section.

Incedo™ Business

A universal security solution that has been designed to provide customers with the ability to flexibly manage access by combining speciality hardware, such as digital cylinders, with intelligent software. The platform can be scaled up or down, in a cost-effective way, depending on the needs of the business.

With a wide range of compatible, intelligent readers, security hardware and a feature rich software application, the Incedo™ eco-system is ideal for multiple access control applications.

Features and benefits

- Quick to install, upgrade and provide results
- Connecting software and hardware within one future-proof platform
- Cloud and local (Lite) management options
- Processing power to control up to 32 doors per controller
- Plug and play hardware for speed of installation
- Wide range of readers including 'mobile ready' versions to future proof your solution
- Embedded or Cloud based interfaces, to match your customers' requirements
- Secure non-cloneable credentials built on Seos™ technology
- Online and offline functionality
- Wired or wireless readers including integrated Aperio®

Incedo™ management systems

The security challenges of our world never stand still — but connecting software and hardware within one future-proof platform makes them easier to control.

This is where Incedo™ Business comes in: a system combining ASSA ABLOY's world-leading range of access hardware and security solutions with flexible software and multiple management options.

Incedo™ hardware

Hardware and software work in harmony within the Incedo™ Business system, enabling businesses to keep premises and assets safe.

Alongside wireless locks and security technologies from our market-leading ranges, Incedo™ is ready to integrate with third-party smart solutions from handpicked partners.

Key features

- The software is specifically designed to provide usability and flexibility
- It is quick to install, upgrade and provide results
- It is agile enough to adapt to the latest technological changes, intuitively combining secure, connected access points with intelligent identification technologies, for a future-proof solution
- It is compatible with all Incedo™ enabled hardware

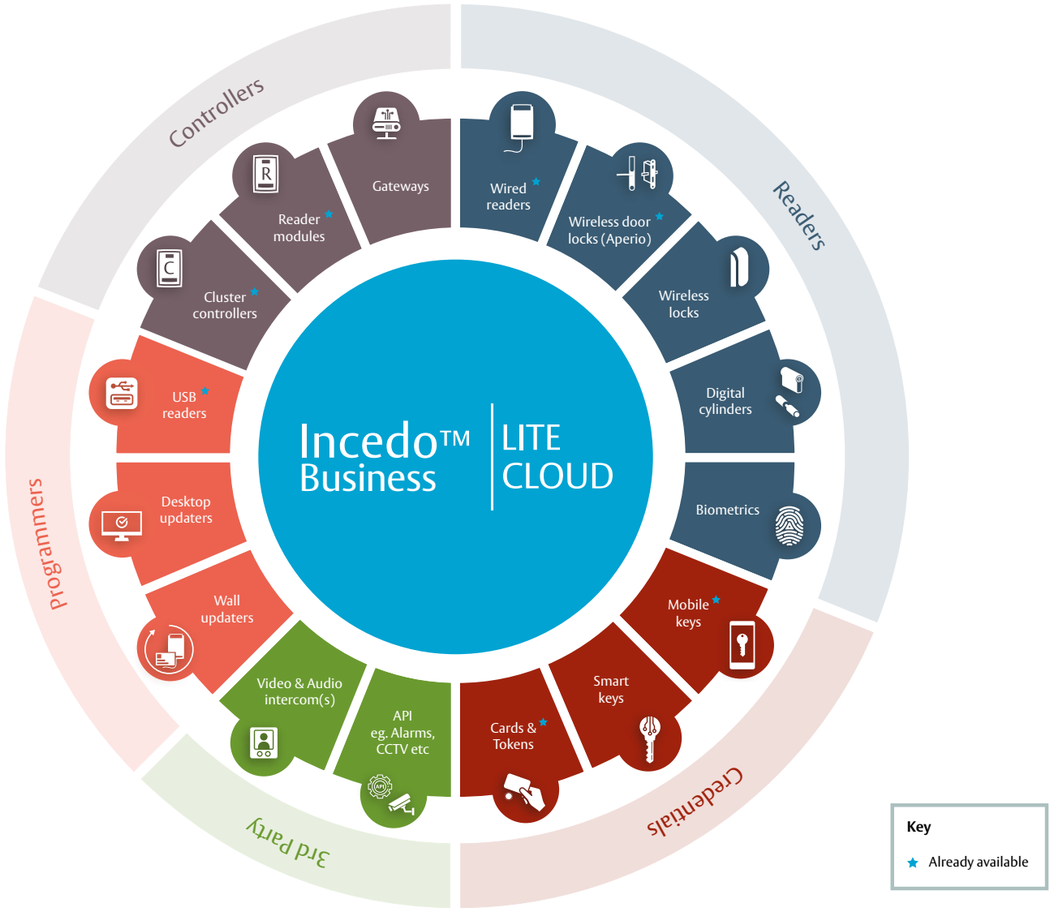

ASSA ABLOY
Opening Solutions

Incedo™ M70

M70 controller module with a built-in power supply and door module using the OSDP protocol.

Features and benefits

- Simplified installations
- Built in power supply
- Powerful offline operation
- Processing power to control up to 32 doors
- Integrates with Aperio® door lock devices
- TCP/IP port, 1 dedicated RS485 port for controlling Aperio® Hubs and 1 for connection of remote Cluster Controllers for further expansion possibilities
- Includes one OSDP reader module or two wired readers
- ROHS, REACH, and WEE compliant

Testing and certification

UKCA / CE marked (EMC, R&TTE)	Yes
Warranty	5 years

Specification

Enrolment	Lite - on premise administration Cloud - remote administration
Interface	Lite - built in application Cloud - web based URL
Input voltage	240 VAC
Power requirements output voltage	140 mA @12VDC (1.7Watt) 13.8+/- 03 VDC
Power input protection	Reverse polarity, over current and transient voltage protection
Tamper	Tamper switch on metal and plastic enclosures
Operating temperature	-25° to +60°C [-13° to +140° F]
Storage temperature	-40° to +80°C [-40° to +176° F]
Operating humidity	0 to 95% relative humidity non-condensing (at +40° C / +104° F)
Dimensions (W x H x D)	380 x 312 x 82mm
Approximate product weight	4.4kg
IP rating	IP20

The M70 includes integrated power supply, CP5 controller module and OM5 door module.

Dimensions

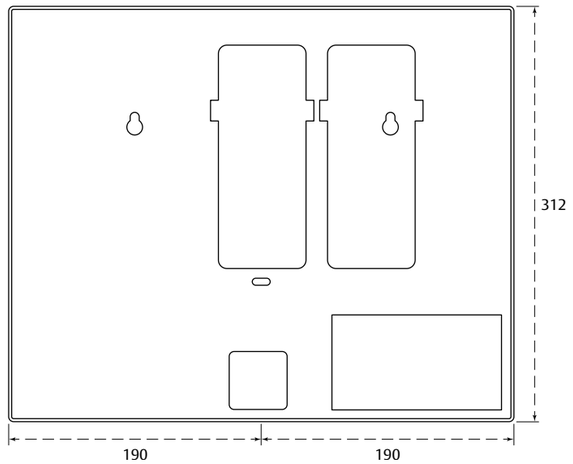

How to order

Contact our Access control team at **+44 (0) 1902 364500** or sales@abloy.co.uk to discuss the specification of your system.

ASSA ABLOY
Opening Solutions

Incedo™ M50

M50 controller with built in power supply and door module.

Features and benefits

- Simplified installations
- Built in power supply
- Powerful offline operation
- Processing power to control up to 32 doors
- Integrates with Aperio® door lock devices
- TCP/IP port, 1 dedicated RS485 port for controlling Aperio® Hubs and 1 for connection of remote Cluster Controllers for further expansion possibilities
- ROHS, REACH, and WEE compliant

Testing and certification

UKCA / CE marked (EMC, R&TTE)	Yes
Warranty	5 years

Specification

Enrolment	Lite - on premise administration Cloud - remote administration
Interface	Lite - built in application Cloud - web based URL
Input voltage	240 VAC
Power requirements output voltage	140 mA @12VDC (1.7Watt)
Power input protection	Reverse polarity, over current and transient voltage protection
Tamper	Tamper switch on metal and plastic enclosures
Operating temperature	-25° to +60°C [-13° to +140° F]
Storage temperature	-40° to +80°C [-40° to +176° F]
Operating humidity	0 to 95% relative humidity non-condensing (at +40° C / +104° F)
Dimensions (W x H x D)	380 x 312 x 82mm
Approximate product weight	4.4kg
IP rating	IP20

The M50 includes integrated power supply, CP5 controller module and DM5 door module.

Dimensions

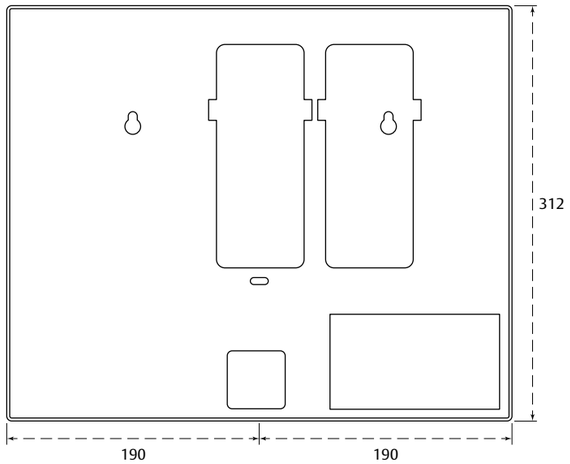

How to order

Contact our Access control team at **+44 (0) 1902 364500** or sales@abloy.co.uk to discuss the specification of your system.

ASSA ABLOY
Opening Solutions

Incedo™ CP5

CP5 cluster controller module.

Features and benefits

- Simplified installation
- Plug and play clustering
- Powerful offline operation
- Processing power to control up to 32 doors
- Integrates with Aperio® door lock devices
- TCP/IP port, 1 dedicated RS485 port for controlling Aperio® Hubs and 1 for connection of remote Cluster Controllers for further expansion possibilities
- ROHS, REACH, and WEE compliant

UK CA CE 5 YEAR WARRANTY

Testing and certification

UKCA / CE marked (EMC, R&TTE)	Yes
Warranty	5 years

Specification

Enrolment	Lite - on premise administration Cloud - remote administration
Interface	Lite - built in application Cloud - web based URL
Input voltage	12 -15V DC
Power requirements	140 mA @12VDC (1.7Watt)
Power input protection	Reverse polarity, over current and transient voltage protection
Tamper	Tamper switch on metal and plastic enclosures
Operating temperature	-25° to +60°C [-13° to +140° F]
Storage temperature	-40° to +80°C [-40° to +176° F]
Operating humidity	0 to 95% relative humidity non-condensing (at +40° C / +104° F)
Dimensions (W x H x D)	186 x 99 x 57mm
Approximate product weight	211g
IP rating	IP20

The M70 includes integrated power supply, CP5 controller module and OM5 door module.

Dimensions

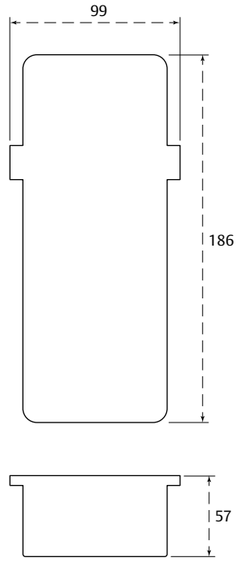

How to order

Contact our Access control team at **+44 (0) 1902 364500** or sales@abloy.co.uk to discuss the specification of your system.

Incedo™ DM5

DM5 door reader module for use with our cluster controller module.

Features and benefits

- Unrivalled simplicity - true plug and play modular design
- Flexible - configure for read in only or read in & out
- Easy installation - colour coded to speed up the installation and avoid mistakes
- System agnostic - for seamless upgrading and integration
- Scaling to the size requirement of the application with quick and convenient plug-in
- ROHS, REACH, and WEE compliant

Testing and certification

UKCA / CE marked (EMC, R&TTE)	Yes
Warranty	5 years

Specification

Input voltage	12 -15V DC
Power requirements	37mA @12VDC (0.44Watt)
Power input protection	Reverse polarity, over current and transient voltage protection
Relay power requirements	An additional ~0.4 W per relay used
RFID technology	CSN read capability from various tag types: iCLASSS(R)/ISO 14443B; MIFARE Classic(R)/MIFARE(R); DESFire(R) EV1; HID PROX/EM410x ASSA ABLOY Card and Token credentials
Operating temperature	-25° to +60°C [-13° to +140° F]
Storage temperature	-40° to +80°C [-40° to +176° F]
Operating humidity	0 to 95% relative humidity non-condensing (at +40° C / +104° F)
Dimensions (H x W x D)	186 x 99 x 57mm
Approximate product weight	280g
IP rating	IP20

Dimensions

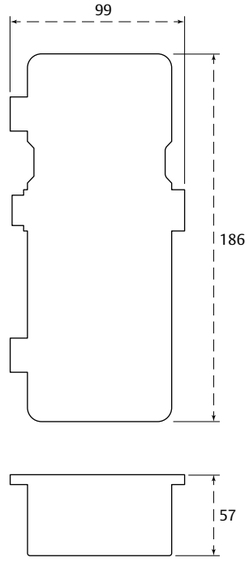

How to order

Contact our Access control team at **+44 (0) 1902 364500** or sales@abloy.co.uk to discuss the specification of your system.

ASSA ABLOY
Opening Solutions

Signo readers

Secure contactless readers with a slimline design and a choice of mounts.

Features and benefits

- Available in 4 different models, 20, 20K, 40 and 40K, to suit a vast range of business needs
- Compatible with more than 15 credential technologies, including Incedo™ business mobile keys
- Futureproof security with inbuilt OSDP
- Complete remote management
- Robust design with inbuilt intelligent energy saving technology
- Compatible with mobile credential technologies (NFC/BLE)
- HID Reader Manager, for convenient configuration
- ROHS, REACH, and WEE compliant

Testing and certification

UKCA / CE marked (EMC, R&TTE)	Yes
Warranty	2 years

Specification

Model	20 - Mullion 20K - Mullion keypad 40 - Wall switch 40K - Wall switch keypad
Operating voltage	12 VDC
Operating temperature	-35° to +66°C
Storage temperature	-40° to +85°C
Connector type	Pigtail cable - 0.5 m
Keypad	Mullion - 2 x 6 capacitive Wall switch - 3 x 4 capacitive
Mounting	Mullion, single or double-gang switch box (EU)
Finish	Black bezel, silver trim
Dimensions (H x W x D)	20 – 45 x 122 x 20mm 20K – 45 x 122 x 22mm 40 – 80 x 122 x 20mm 40K - 80 x 122 x 20mm
Environmental rating	UL294 outdoor and indoor rated

Dimensions

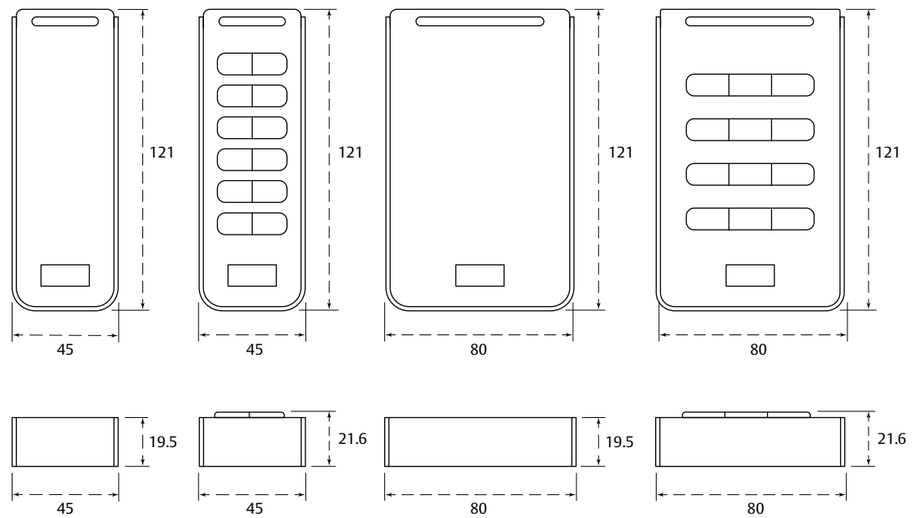

How to order

Contact our Access control team at **+44 (0) 1902 364500** or sales@abloy.co.uk to discuss the specification of your system.

Aperio®

Cost effective, integrated access control - without wires.
Access control providers around the globe can integrate non-wired doors with mechanical locks into their access control systems using ASSA ABLOY's Aperio® technology.

Installing traditional access control doors is costly due to the extensive wiring required, which is why access control systems often only cover doors with high security requirements – leaving all other doors with mechanical locks unmonitored and unmanaged.

With Aperio® technology, all doors can be easily upgraded and wirelessly linked to the access control system by using Aperio® battery powered electronic locking devices with integrated RFID card readers/BLE – optimising access control and boosting security.

Features and benefits

- Wireless locking technology
- Up to 64 locks on one IP hub
- Mobile credentials
- Easy reporting
- Multiple access control system integrations
- Works with an online system or as an offline lock

Typical Aperio® setup

Online and offline integration

Aperio® offers both online and offline integration depending on customer needs. Online and offline can be mixed to optimise adaptation to the site.

Scalable solutions

Aperio® wireless locks are a flexible solution for all doors on multiple sites. They allow you to upgrade and convert more mechanical doors to access control in the future in an easy and cost-effective way without the hassle of wiring.

Forget about keys

Simply add Aperio® battery-powered locks with integrated card readers to any door to link it wirelessly to the central access control system. Aperio® also features BLE enabled functionality on featured locks. Upgraded doors can be used with existing cards or a single digital credential, and it only takes a few seconds to issue or revoke cards, from a PC or smartphone. Reprogramme an RFID card and you instantly have a new key.

Easy installation

Aperio® wireless access control takes the stress out of upgrading - beating wired systems hands-down when it comes to speed of installation. No wiring and no cabling means there's no expensive electrical work required on-site.

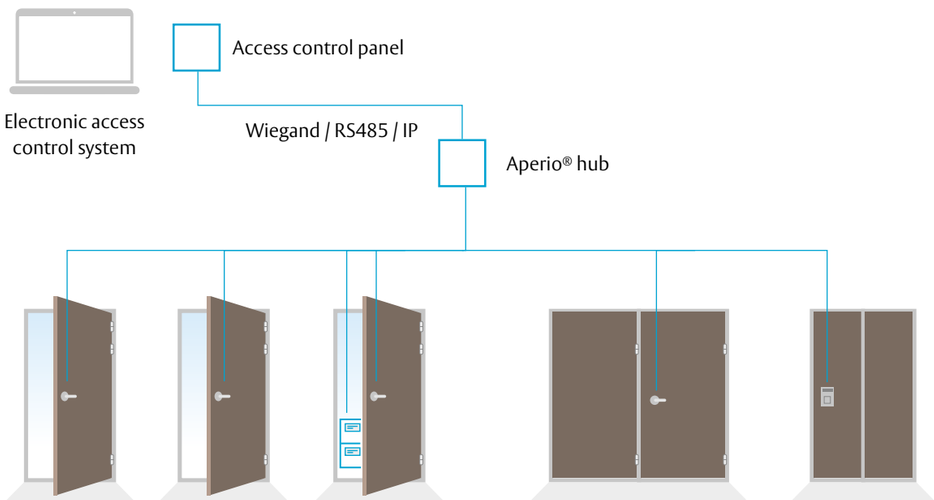

Aperio® hub

Communications hub for indoor use.

Features and benefits

- Used for communication between the Aperio® wireless components and the SCALA access control system
- Hubs available: Wiegand 1:1, RS485 1:16, IP: 1:64
- Integrated antenna with the option to mount an external antenna
- Encrypted radio communication
- Mounting on standard switch boxes
- Mounting takes place on all conventional flush-mounted or surface-mounted casings
- LED for status visualisation
- ROHS, REACH, and WEE compliant

Testing and certification

UKCA / CE marked (EMC, R&TTE)	Yes
Certified in compliance with	ETL, FCC, IC, C-Tick
Warranty	2 years

Specification

Safety and emissions	FCC 47CFR Part 15 subpart B and subpart C, IC RSS-210, EN ETSI 301 489-17 v2.1.1, EN ETSI 300 328 v1.7.1, EN 60950-1 ed.2 2007, UL 294-2010, C22.2
Required power supply	250 mA minimum 80 mA at 12 V DC
Radio standard	IEEE 802.15.4 (2.4 GHz) - 16 channels (11-26)
Encryption (radio communication)	AES 128 bits
Wireless operating range	Typical range of 15-25m depending on building environments
Receiver sensitivity	100dBm 20%PER
Internal antenna	2 cross polarized dipoles
External antenna	One reverse polarity SMA external antenna connector. Type (dipole) and not have larger antenna gain than 3,9dBi
IP rating	IP20
Operating temperature range	5°C to 35°C
Relative humidity	< 95% (non-condensing)
Dimensions (H x W x D)	82 x 82 x 37mm
Status	LED (red, green, orange)

Dimensions

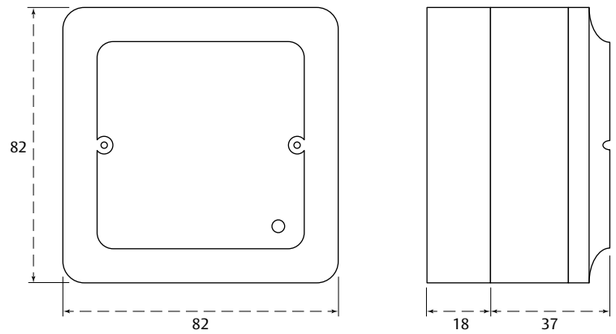

How to order

Contact our Access control team at **+44 (0) 1902 364500** or sales@abloy.co.uk to discuss the specification of your system.

ASSA ABLOY
Opening Solutions

C100 cylinder

Metal single and double knob cylinders incorporating wireless, battery powered Aperio® technology.

Features and benefits

- For use in indoor areas
- Compatible with all DIN mortice locks
- Compatible version for Scandinavian mortice locks
- Suitable for locks on glass doors and walls
- Outside knob rotates freely - inside knob always engaged (double cylinder only)
- Freely rotating lock cam
- Up to 10 override credentials can be stored for emergency access in case of failure or no communication with the access control or hub
- Smart credential cached stores up to 1000 credentials for up to 30 days
- ROHS, REACH, and WEE compliant

Testing and certification

UKCA / CE marked (EMC, R&TTE)	Yes
Certified in compliance with	EN 1634-1
Warranty	2 years

Specification

Version	Fix or demountable knob versions with or without RFID-Reader
Cylinder length (length = A / length = B)	Single: Basic length 30mm, extendible in increments of 5mm up to 60mm Double: Basic length 30/30mm, extendable in 5mm increments up to 60mm
Fixing screw	60, 85mm
Battery	1 x Lithium CR2
Battery life	10 openings per day for 27 months
Radio standard	IEEE 802.15.4 (2.4 GHz)
Encryption (radio communication)	AES 128 bits
Distance between the RFID-Reader and hub	Typical range 25m depending on the hub type and building environments
IP rating	IP65
Operating temperature range	-20° to +55°C
Status	LED (red, green, orange)
RFID technologies (based on reader type)	High Frequency: iCLASS®/ISO 14443B; MIFARE Classic® / MIFARE® DESFire® EV1&EV2; Legic: LEGIC® (Advant, Prime, ISO/IEC14443 UID, ISO/IEC15693 UID); Optional MIFARE® Support NFC Mobile Credential
RFID reading	UID, sector, block, application, file
RFID reading range	< 4 cm
Communication interfaces	Micro USB firmware download (V3 only)
Finish	SS

Dimensions

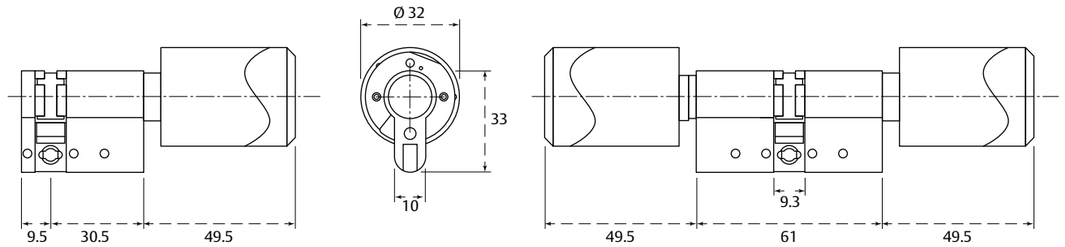

How to order

Contact our Access control team at **+44 (0) 1902 364500** or sales@abloy.co.uk to discuss the specification of your system.

ASSA ABLOY
Opening Solutions

H100 handle

Packs the power and flexibility of wireless access control into one slim, expertly designed, battery-powered door handle.

Features and benefits

- Robust, wireless device for interior doors in high traffic environments
- Easiest way to add access control to a mechanical lock without drilling
- Compatible with most common European (DIN) mortice locks and wooden, steel and tubular-frame doors (and glass doors with standard lockcases)
- Easy to retro-fit to almost any interior door
- Discrete handle with minimum footprint and contemporary design
- Supports the latest card and mobile credentials and all main RFID technologies
- Up to 10 override credentials can be stored for emergency access in case of failure or no communication with the access control or hub
- Permanent mechanical egress from inside
- Smart credential cached stores up to 1000 credentials for up to 30 days
- ROHS, REACH, and WEE compliant

Classification code

4	7	-	1	0	5	0	B
(1-4)	(6/7)	-	(1-C1)	(0/1)	(1-5)	(0-4)	(A/B/U)

EN 1906:2012

UK CA CE 2 YEAR WARRANTY EPD®

Testing and certification

UKCA / CE marked (EMC, R&TTE)	Yes
Certified in compliance with	EN 1906
Warranty	2 years

Specification

Authentication	One level of authentication - card only
Door type	Interior doors
Door leaf thickness	Between 35 - 80 mm With 10mm distance ring accessory, thinner doors can be used
IP rating	IP42
Power supply	Battery: 1 x Lithium CR123A Battery life: High frequency multiclass 30 openings per day for 50 months
Operating temperature range	0°C to 55°C
Relative humidity	< 85% (condensation free)
Status	LED (red, green, orange)
Radio standard	IEEE 802.15.4 (2.4 GHz)
Encryption (radio communication)	AES 128 bits
RFID technologies (based on reader type)	High Frequency Multiclass: iCLASS®/ISO 14443B; iCLASS® Seos; MIFARE® Classic; MIFARE® Plus; MIFARE® DESFire§ EV1 BLE and NFC Mobile credentials
RFID reading	UID, sector, block, application, file
RFID reading range	< 4 cm
Distance between the RFID reader and hub	Up to 25m depending on the building environment
Communication interfaces	Communication via radio (USB dongle) or USB type B adapter (accessory)
Offline and online operation modes	Aperio® Online Aperio® Offline Aperio® Standard OSS Offline
Dimensions (H x W x D)	56 x 55 x 13.5mm (rose dimensions)
Handle	L-Shape, U-Shape through adapter (accessory)
Spindle	7, 8 and 9mm spindle available
Finish	SC

Dimensions

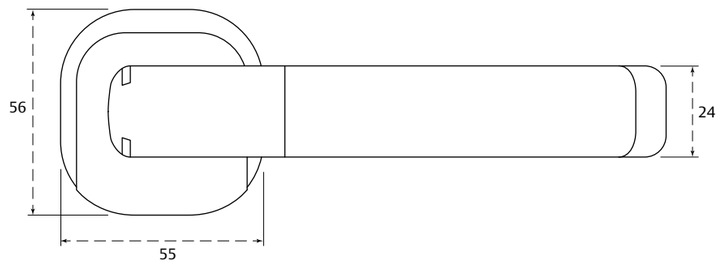

How to order

Contact our Access control team at **+44 (0) 1902 364500** or sales@abloy.co.uk to discuss the specification of your system.

ASSA ABLOY
Opening Solutions

L100 high security lockcase

A high security electronically controlled wireless lock, incorporating wireless, battery powered Aperio® technology.

Features and benefits

- Euro profile security lock with standard RFID reader, with integrated door sensors for bolt and door position, and mechanical key override (keypad optional)
- Highly effective burglar protection
- Outside handle controlled by electronics - inside handle always engaged (request to exit sensor included)
- Possibility to store up to 10 emergency cards (only used in case of disconnection from the hub)
- Intelligence split structure enables extreme temperature range, -40°C to +65°C
- Provides high levels of physical protection and communicates detailed information on door status to the access control system
- Smart credential cached stores up to 1000 credentials for up to 30 days
- ROHS, REACH, and WEE compliant

Classification code

3 (1-3) | S (A-Y) | 8 (1-9) | D (0-F) | - (NPD) | L (0-P) | 6 (0-7) | 1 (0-1) | 1 (0-3)

EN 14846:2008

UK CA CE 2 YEAR WARRANTY EPD®

Testing and certification

UKCA / CE marked (EMC, R&TTE)	Yes
Certified in compliance with	EN 14846, EN 179*, EN 1125*
Warranty	2 years

*only when used in conjunction with approved hardware. Contact our team for more information.

Specification

Authentication	Three levels of authentication (PIN only, card only, PIN and card combined) with PIN code - 4 to 8 digits
Dimensions (H x W x D)	Lock 168.5 x 16.5 x 88,93,98mm Reader inside 167.8 x 48 x 20 Reader outside 101.8 x 43.7 x 15mm
Door type	Standard or narrow doors with left or right handing
Backset	Standard doors (55mm, 60mm, 65mm) Narrow doors (30mm, 35mm)
Distance	Distance standard doors 72mm Narrow doors 92mm, spindle 8/9 mm
Front plate	24mm
Door leaf thickness	Spindle length - Door thickness in (): 47/50 (40- 54 mm); 57/50 (47/66 mm); 67/60 (61-80 mm); 74/50 (66-80 mm); 120/120 (88-100 mm); 80/50 (70-87 mm)
Battery	2 x Lithium AA (FR6)
Battery life	> 100,000 cycles (for max. 4 years)
Radio standard	IEEE 802.15.4 (2.4 GHz)V
Encryption (radio communication)	AES 128 bits
Distance between the RFID-reader and hub	Typical range 25 m depending on the hub type and building environments
IP rating	IP44 inside, IP55 outside
Operating temperature range	10°C to 65°C inside, -40°C to 65°C outside
Relative humidity	< 85% (condensation-free)
Status	LED (red, green, orange)
Door status	Locking status (unlocked, locked); Door indication (closed, open); Inside handle detection; Key Cylinder use; Tamper (sabotage)
RFID technologies (based on reader type)	iCLASS®/ISO 14443B; MIFARE® classic, MIFARE® plus; MIFARE® DESFire® EV1, LEGIC® Advant (in progress)
RFID reading	UID, sector, block, application, file, LEGIC® segment data
RFID reading range	< 4 cm
Communication interfaces	Micro USB firmware download and battery back up

Dimensions

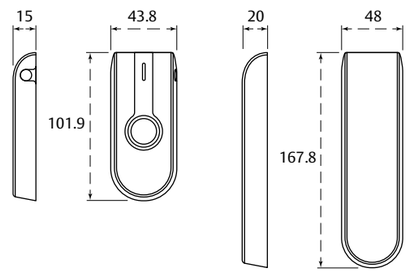

How to order

Contact our Access control team at **+44 (0) 1902 364500** or sales@abloy.co.uk to discuss the specification of your system.

ASSA ABLOY
Opening Solutions

E100 escutcheons

Euro profile escutcheons incorporating wireless, battery powered Aperio® technology.

Features and benefits

- Robust, wireless device for high traffic environments
- Compatible with most common European (DIN) mortice locks and wooden, steel and tubular-frame doors (and glass doors with standard lockcases)
- Main electronics outside with security-relevant electronics inside, for added security
- LED for status visualisation
- Outside handle rotates freely - inside handle always engaged
- Up to 10 override credentials can be stored for emergency access in case of failure or no communication with access control or hub
- Supports the latest card and mobile credentials and all main RFID technologies (keypad optional)
- Available for most door types with or without key override
- Smart credential cached stores up to 1000 credentials for up to 30 days
- Privacy optional available
- Permanent mechanical egress from inside

Classification code

2	6	-	B	0	1	0	B
(1-4)	(6/7)	-	(1-C1)	(0/1)	(1-6)	(0-4)	(A/B/U)

EN 1906:2012

Testing and certification

UKCA / CE marked (EMC, R&TTE)	Yes
Certified in compliance with	EN 1906
Warranty	2 years

Specification

Authentication	Three levels of authentication (PIN only, card only, PIN and card combined)
Code	PIN code - 4 to 8 digits
Version	Basic = interior and exterior doors up to grade 2
Handle	L-Shape, U-Shape
Distance (standard)	Distance 72 mm, 92 mm Spindle 8 mm, 9 mm, 10 mm
Door leaf thickness	Door leaf between 40 and 100 mm thick, in 10 mm increments
Backset	> 40 mm
Battery	1 x Lithium CR123A
Battery life	30 openings per day for 49 months
Radio standard	IEEE 802.15.4 (2.4 GHz)
Encryption (radio communication)	AES 128 bits
Distance between the RFID-reader and hub	Typical range 25m depending on the hub type and building environments
IP rating	IP52 (IP54 Option available)
Operating temperature range	0°C to 60°C
Relative humidity	< 85% (condensation-free)
Status	LED (red, green, orange)
RFID technologies (based on reader type)	High Frequency: iCLASS®/ISO 14443B; MIFARE Classic® / MIFARE® DESFire® EV1&EV2; Legic: LEGIC® (Advant, Prime, ISO/IEC14443 UID, ISO/IEC15693 UID); Optional MIFARE® Support BLE and NFC Mobile credentials
RFID reading	UID, sector, block, application, file, LEGIC® segment data
RFID reading range	< 4 cm
Communication interfaces	Micro USB firmware download and battery back up
Dimensions (H x W x D)	312 x 41 x 10/20 mm
Finish	SSS

Dimensions

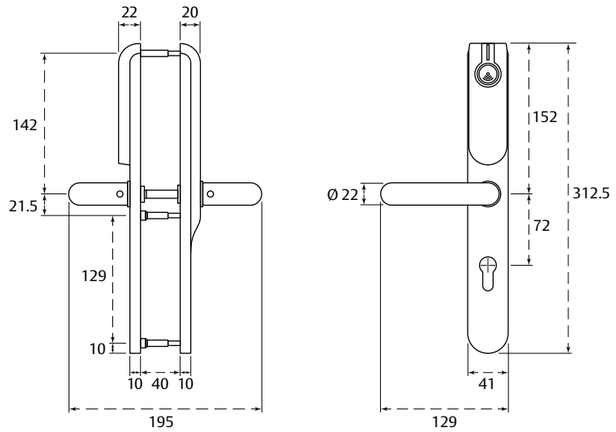

How to order

Contact our Access control team at **+44 (0) 1902 364500** or sales@abloy.co.uk to discuss the specification of your system.

KS100 server cabinet lock

Data centre security server cabinet lock incorporating wireless, battery powered Aperio® technology.

Features and benefits

- Ideal for co-location data centres with multiple companies requiring access
- Provides full audit trails, tracking who has accessed your server rack and when
- Designed for standard 25mm x 150mm server lock openings
- Standard server cabinet swing-handle design that can be used on left or right handed doors
- LED for status visualisation
- Easy to integrate and install with your new or existing access control system
- Real-time communication to access control system ensures easy management of access rights
- Possibility to store up to 10 emergency cards (only used in case of disconnection from the hub)
- Can be mechanically overridden using key
- ROHS, REACH, and WEE compliant

Testing and certification

UKCA / CE marked (EMC, R&TTE)	Yes
Warranty	2 years

Specification

Required power supply	Battery 2 x AA lithium batteries
Wireless operating range	2.4 GHz, IEEE 802.15.4, using AES 128bit encryption
Operating temperature range	-10°C to 50°C
RFID technologies (based on reader type)	iCLASS™/ISO ISO1443B; iCLASS™ SEOS, iCLASS™ SE, MIFARE® classic, MIFARE® plus, DESFire® EV1, and NFC
Dimensions (H x W x D)	222 x 42 x 33.5mm

Dimensions

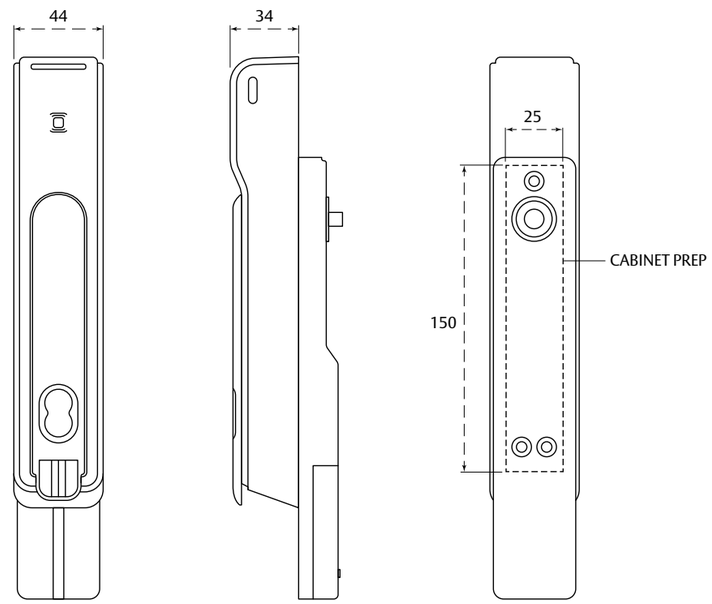

How to order

Contact our Access control team at **+44 (0) 1902 364500** or sales@abloy.co.uk to discuss the specification of your system.

SMARTair

A SMARTair wireless access control system allows you to forget about keys and manage the access to your building from a single control point. It is easy to install and even easier to manage.

Doors secured by our range of wireless locking devices are opened with RFID credentials or a smartphone.

Our flexible system can be used in various applications:

SMARTair Standalone
Wireless access control for smaller sites, with no need to run any software

SMARTair Update on Card
Combine offline access control with wall updaters to ensure users and locks are frequently monitored

SMARTair Wireless Online
Control and monitor access in real time, however large your site is

Mobile access control with SMARTair Openow™
Replace keys and smart-cards with secure credentials stored on a user's smartphone

Features and benefits

- Cost effective access control technology with multiple credential options
- Real-time access control
- Time-saving management of keys and users
- Intuitive management software
- A modern, mobile solution for your premises

TS1000 management software

For the ultimate in access flexibility, SMARTair TS1000 software enables system administration from any device. Manage Update on Card, offline and online devices within a singular interface.

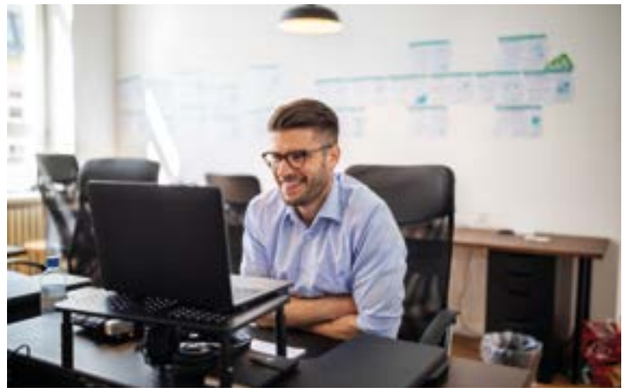

Key features

- Intuitive management software
- Real-time control
- Up to 30 separate schedules
- Management from virtually any device

Real-time access control

Real-time access control brings flexibility to any installation.

You can easily combine different management systems within one installation. For example, perimeter doors are equipped with Wireless Online functionality, while many interior doors are managed by Update on Card.

Single point access control

The software puts managers in complete control of all access from a single point. Its secure client–server architecture with web services allows system management from virtually any device. There is no need for managers to have a consistent presence at their site, and no software for clients to install.

Permissions flexibility

Facilities and security managers can opt to manage access rights with calendar schedules for different user groups. The system offers ongoing flexibility, easily incorporating new doors, new users and permissions, calendars and time zones.

Upgrade quickly

The SMARTair TS1000 offers the capability to upgrade quickly from offline to Update on Card or Wireless Online management making your investment futureproof.

Credentials

SMARTair provides a wide choice of convenient physical credentials, plus the option to open doors with virtual keys stored securely on a smartphone.

Key features

- HID iCLASS®
- MIFARE® Classic
- DESFire®
- SKIDATA

Multiple credential types are supported, including cards, tags, bracelets and stickers.

Openow™

Replace keys and smart cards with secure credentials stored on a user's smartphone.

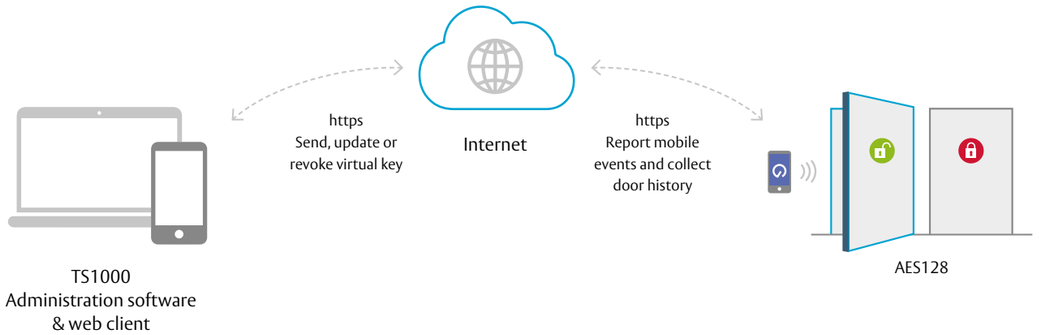

It's easier than you think to make your workplace mobile ready with SMARTair Openow mobile access control. All site users need is their smartphone and the Openow™ app to unlock any SMARTair device.

Facility managers can send, revoke and update virtual keys from anywhere, using the SMARTair TS1000 software. In addition, they can update the user access plan, collect all the door history and trigger email alerts using the user app.

Your business can replace smart cards, tags, keys and other physical credentials altogether. Everything else works exactly the same.

Features

- BLE enabled
- Mobile keys sent via email
- Uploads audit trail via Openow App
- Available on iOS and Android

i-Max electronic escutcheon

A robust wireless device to bring secure RFID and BLE unlocking to every high-traffic door. i-Max SMARTair electronic escutcheon is easy to retrofit and compatible with online or offline system management.

Features and benefits

- Robust, wireless device for high traffic environments
- Supports the latest card and mobile credentials and all main RFID technologies
- LED for status visualisation
- Permanent mechanical egress from inside
- ROHS, REACH and WEE compliant
- EN 1906 Category of use Grade 4

Testing and certification

UKCA / CE marked (EMC, R&TTE)	Yes
Certified in compliance with	EN 1634-1

Specification

Door profiles	Suitable for wooden, narrow or glass doors
Traffic volume	Medium to high
IP rating	IP56 (extreme version)
Operating temperature	Up to 85% humidity -20°C to +70°C
Hardware compatibility and installation	Doors from 30mm up to 120mm (thicker doors may be possible on demand) Easy to retrofit (compatible with most common mortice locks) Drilling template, no need for cabling
Power supply	Battery (from 75,000 to 105,000 cycles)* max. 2 years standby** Type of batteries: 3 LR03 AAA 1.5V alkaline batteries
Multi - authentication	Yes (Card + PIN, PIN only, card only)
Status information	Handle usage Internal thumb-turn use recorded (only in models with electronic privacy) Mechanical opening recorded (in combination with a special mortise lock)
RFID technologies	HID iCLASS®, MIFARE Classic and Ultralight, SKIDATA, DESFire
Compatible mobile solutions	Openow (Bluetooth low energy)
System management upgradability	SMARTair escutcheons can be upgradeable from Standalone > offline / Update on Card >Wireless Online by: · Adding RF module · Firmware upgrade · Change of internal cover (plastic top)
Finish	Handle - SS, SC, PB, BLK, PC, SB, White, Marengo Reader – BLK, White

Dimensions

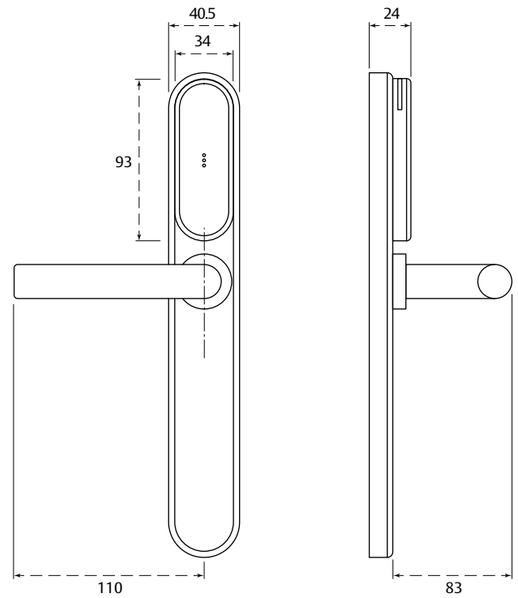

How to order

Contact our Access control team at **+44 (0) 1902 364500** or sales@abloy.co.uk to discuss the specification of your system.

ASSA ABLOY
Opening Solutions

i-Volution lock

Combine the powerful access control of an electronic escutcheon with the intelligence of an electromechanical mortice lock.

Features and benefits

- Robust, wireless device for high traffic environments
- Supports the latest card and mobile credentials and all main RFID technologies
- LED for status visualisation
- High security lockcase
- ROHS, REACH and WEE compliant
- Permanent mechanical egress from inside

Testing and certification

UKCA / CE marked (EMC, R&TTE)	Yes
Certified in compliance with	EN 14846, EN 12209

Specification

Door profiles	Suitable for wooden doors
Traffic volume	Medium to high
IP rating	IP56 (Extreme version)
Operating temperature	Up to 85% humidity From -20°C to +70°C (external) From 0°C to +50°C (internal)
Hardware compatibility and installation	Medium retrofit, easy installation without any wiring, drilling template, no need for cabling
Power supply	Batteries from 80,000 to 105,000 cycles depending on the management system. Max. 3 years standby (depending on cycles per day) Three LR03 AAA 1,5V alkaline batteries
Multi - authentication	RFID
RFID technologies	13,56MHz Read & Write technologies MIFARE Classic
Compatible mobile solutions	Openow (Bluetooth low energy)
System management upgradability	Compatible with the following SMARTair systems: · Offline/Update on Card · Offline/Update on Card + Openow ->Includes the Openow module · Wireless + Openow ->Includes the WIR + Openow module There is a firmware per system SMARTair Locks are scalable: · From offline -> Wireless + Openow · Just adding the necessary Openow or WIR + Openow module and changing the firmware
Finish	Reader - BLK, White Ring - SS, PB, BLK, White

Dimensions

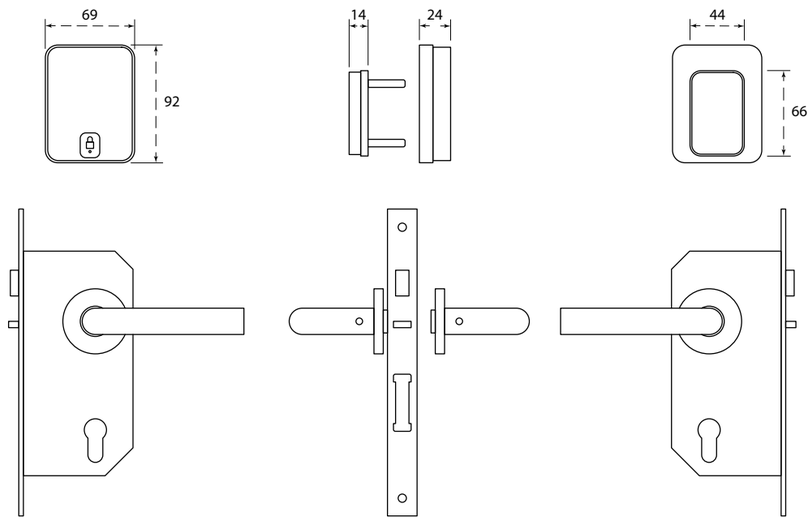

How to order

Contact our Access control team at **+44 (0) 1902 364500** or sales@abloy.co.uk to discuss the specification of your system.

Electronic knob cylinder

Upgrade existing door cylinders with a SMARTair knob cylinder with integrated RFID reader. Easy to retrofit, in multiple finishes, and compatible with virtual keys stored in the SMARTair Openow app.

Features and benefits

- Easy retrofitting
- Real-time control
- Up to 30 separate schedules
- Management from virtually any device
- ROHS, REACH and WEE compliant
- Durability tested to the EN 15684 Class 6

Testing and certification

UKCA / CE marked (EMC, R&TTE)	Yes
Certified in compliance with	No

Specification

Door profiles	Suitable for wooden, narrow or glass doors
Traffic volume	Medium to high
IP rating	IP56 (Extreme version)
Operating temperature	Up to 85% humidity -20°C to +70°C
Hardware compatibility and installation	High retrofit No drilling, no wiring
Power supply	Battery (60.000 cycles) Depending on the reading technology (MIFARE, DESFire, Etc.) Max. 2 years standby (depending on cycles per day) Type of batteries: One CR2 3V Lithium battery
RFID technologies	13,56MHz Read & Write technologies MIFARE Classic and Ultralight, HID iCLASS, DESFire, SKIDATA
Compatible mobile solutions	Openow (Bluetooth low energy)
System management upgradability	Compatible with all SMARTair systems: · Standalone* · Offline/Update on Card* · Offline/Update on Card + Openow · Wireless + Openow SMARTair knob cylinders can be: · Upgraded from Standalone -> offline/Update on Card* · Upgraded from offline/Update on Card + Openow -> Wireless + Openow Both options just changing the firmware with the programming device
Finish	Knob body – SS, SB, PB, BLK, White Knob cover – BLK, White

Dimensions

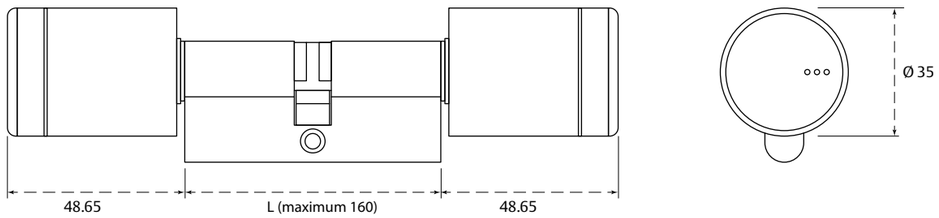

How to order

Contact our Access control team at **+44 (0) 1902 364500** or sales@abloy.co.uk to discuss the specification of your system.

i-Gate electronic padlock

A wireless, electronic IP68 padlock, built for trusted security in the harshest conditions providing modern security and real-time access control - outside and inside.

Features and benefits

- Compatible with all SMARTair management options, online and offline
- Use RFID credentials or Openow virtual keys
- Exterior usage rating: IP68
- Typical battery lifetime: 60,000 cycles
- ROHS, REACH and WEE compliant
- Durability tested to the EN 15684 Class 6

Testing and certification

UKCA / CE marked (EMC, R&TTE)	Yes
Certified in compliance with	No

Specification

Door profiles	External gates, closets, cabinets, etc.
Traffic volume	Medium to high
IP rating	IP68 Certification. Resistant to real extreme weather conditions
Operating temparature	Up to 85% humidity -20°C to + 70°C
Hardware compatibility and installation	High retrofit No drilling, no wiring
Power supply	Battery (60.000 cycles) depending on the reading technology (MIFARE, DESFire, Etc.) Max. 2 years standby (depending on cycles per day) Type of batteries: One CR2 3V Lithium battery
RFID technologies	13,56MHz Read & Write technologies MIFARE Classic and Ultralight, HID iCLASS, DESFire, SKIDATA
Compatible mobile solutions	Openow (Bluetooth low energy)
System management upgradability	Compatible with all SMARTair systems: · Standalone* · Offline/Update on Card* · Offline/Update on Card + Openow · Wireless + Openow SMARTair padlocks can be: · Upgraded from Standalone -> offline/Update on Card* · Upgraded from offline/Update on Card + Openow -> Wireless + Openow Both options just changing the firmware with the programming device
Finish	Shackle – SS Cover – BLK

Dimensions

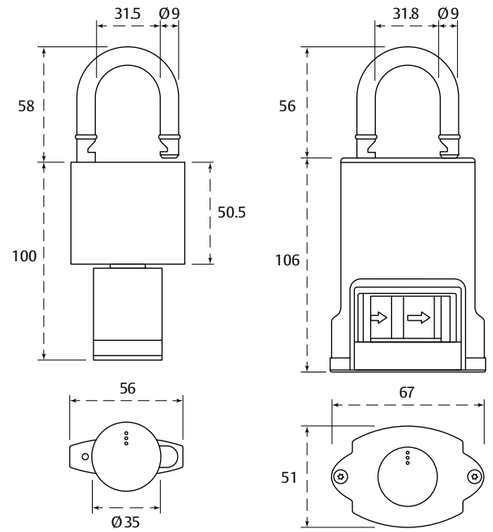

How to order

Contact our Access control team at **+44 (0) 1902 364500** or sales@abloy.co.uk to discuss the specification of your system.

Wall reader

Where locks cannot be installed or openings are automated, like gates and lifts, choose the SMARTair wall reader. For Update on Card management, your wall reader also doubles as a credential updater.

Features and benefits

- Elevator interface with up to 40 floors
- Keypad can allow multi-factor authentication
- Built in relay and a control unit
- Built-in RFID capability
- ROHS, REACH and WEE compliant

Testing and certification

UKCA / CE marked (EMC, R&TTE)	Yes
Certified in compliance with	No

Specification

Traffic volume	High
IP rating	IP55 (Wall reader)
Operating temperature	Up to 85% humidity -20°C to + 80°C (Wall reader) -10ºC to + 80ºC (Relay board)
Hardware compatibility and installation	To be combined with electromechanical devices to unlock the door (e.g. electric strike plates, electromagnetic locks or escape routes) Cabling needed
Power supply	Cabled 12-24 VAC – VDC: powered through relay board Max power consumption (reader + relay board): 500mA @ 12V /250mA @ 24V
Multi - authentication	Yes: RFID and PIN (keypad variant)
RFID technologies	HID iCLASS®, MIFARE Classic and Ultralight, SKIDATA, DESFire
Compatible mobile solutions	Openow (Bluetooth low energy)
Upgradability	SMARTair wall readers* can be upgradeable from Standalone > offline / Update On Card > Wireless Online by: · Adding RF module · Firmware upgrade

Dimensions

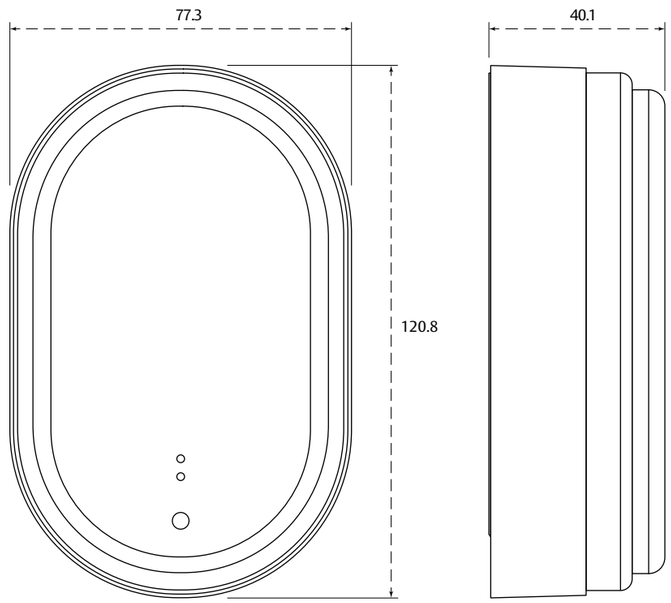

How to order

Contact our Access control team at **+44 (0) 1902 364500** or sales@abloy.co.uk to discuss the specification of your system.

ASSA ABLOY
Opening Solutions

Communications hub

Communications between wireless devices and system software are automated and encrypted by communication hubs. Each hub manages up to 30 doors within a 30-metre range.

Features and benefits

- Up to 30 doors
- Up to 30 metre range
- TCP/IP connection to ethernet/network through RJ45 connector
- Backup memory in case of communication failure
- ROHS, REACH and WEE compliant

Testing and certification

UKCA / CE marked (EMC, R&TTE)	Yes
Certified in compliance with	No

Specification

Traffic volume	The SMARTair Wireless HUB is the link between SMARTair Software (TS1000) and the RF module in the SMARTair Wireless escutcheons, wall readers and knob cylinders
Hardware compatibility and installation	· 868MHz or 915MHz selectable in field · 30 configurable channels: · From 868,00 to 875,25 in steps of 0,25Mhz each channel · From 915,00 to 922,25 in steps of 0,25Mhz each channel
Communication	2 Options: · 12-24 DC: max consumption 1A @12DC (0,5A @24 VDC) · PoE: directly from the network cable (switches must also be PoE). IEEE802.3af compliant
Power supply	Cabled 12-24 VAC – VDC: powered through relay board Max power consumption (reader + relay board): 500mA @ 12V /250mA @ 24V
IP rating	For internal use
Operating temperature	Temperature range: 0ºC - 60°C · Humidity: 10-90%. Vapour and humidity may affect wireless signal
Connection	Secure end-to-end encryption: · TCP/IP SSL encrypted communication between server & communication Hubs. · 868 MHz or 915 MHz radio communication with door devices, with AES128 encryption
Upgradability	Upgradeable firmware

Dimensions

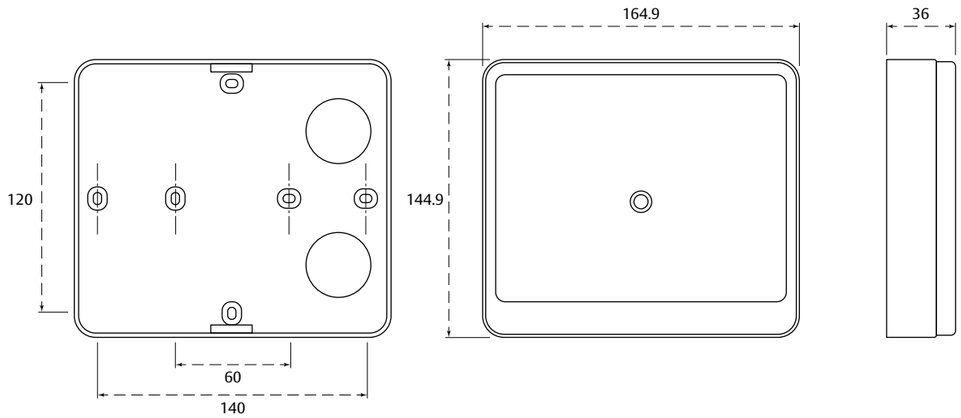

How to order

Contact our Access control team at **+44 (0) 1902 364500** or sales@abloy.co.uk to discuss the specification of your system.

Door furniture

Introduction	862
Legislation	865
Product selector	868
Commercial lever and pull handles	873
Classic range	887
Distinction range	899
ScanFlex range	905
Ruko-Line range	927
High security marine handles	937
Commercial flush bolts	943
Door accessories	949
Product accessories	957

Door furniture

Door furniture is the final element that not only provides the contact points for a door user, but is generally considered the most important element in completing the design vision and providing the desired aesthetic across a building or project.

Featuring high quality engineering and robust construction plus classic and contemporary styles, our furniture is manufactured to ensure an exquisite result whilst being ideal for high use environments. With functionality to suit UK, DIN and Scandinavian lockcases, a selection of finishes and complimenting accessories, our door furniture gives the perfect finish to any building including applications such as commercial, retail, education and healthcare.

Key features

- Furniture to suit all applications
- All ranges designed for medium to high frequency
- Suited to areas of use by public or users with little incentive to exercise care
- Selection of furniture with ideal hygiene properties for healthcare environments
- Most products tested for use on fire doors

Considerations for selecting the right door furniture

The types of handle

- Lever on rose: lever handle fitted to either a round or square rose
- Lever on backplate: lever handle fitted to a backplate
- Pull handle: pull handle fitted to either a round or square rose (or backplate / push plate)

Whether to select a knob or a lever handle can be solely personal choice although, for many environments, door levers and pull handles are easier to open, making them more suited to a barrier free environment.

We have a range of handle sets which accommodate various application and types of lockcases, for example UK, DIN and Scandinavian.

Door functionality and use is of paramount importance when choosing your furniture. Where a door is located in an area where there is little or no care taken when using these doors, then a higher category of use should be selected. See more details under legislation EN 1906, digit 1.

The door function

Doors have different functions that impact the hardware used, such as non-locking lever operation for hallways; or locking with a privacy lever for bathrooms. The most common arrangements are:

1. Passage set (non–locking)

2. Entry set (with key locking)

3. Privacy (with an integrated or separate locking function)

Material and finish

Marine grade 316 range is recommended for exterior and interior use

It is important to consider the environmental conditions that handles will be situated in. Grade 316 handles are best suited for external applications as well as internal coastal applications. Grade 316 steel is salt tested to 480 hours to ensure the products do not rust or deteriorate due to the air quality and weather conditions.

Antimicrobial

Antimicrobial coating is a surface clear solution containing an active ingredient that is effective against bacterial and fungal growth. These coatings help to keep products and surfaces cleaner by reducing the growth of microbes. The result is a coating that can enhance finished products and surfaces with proactive protection and an extended functional lifetime.

Finishes

The finish selection of door furniture is mostly a choice of aesthetics and is critical in enabling a door to fit seamlessly in to the design of the building. Brass finishes are often associated with residential properties, whereas a commercial setting is more likely to use stainless steel and chrome hardware, however fashion and trends also impact the hardware choice.

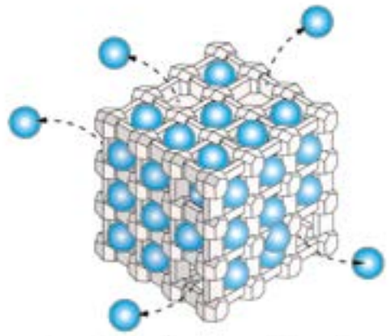

Crystal releases silver ions

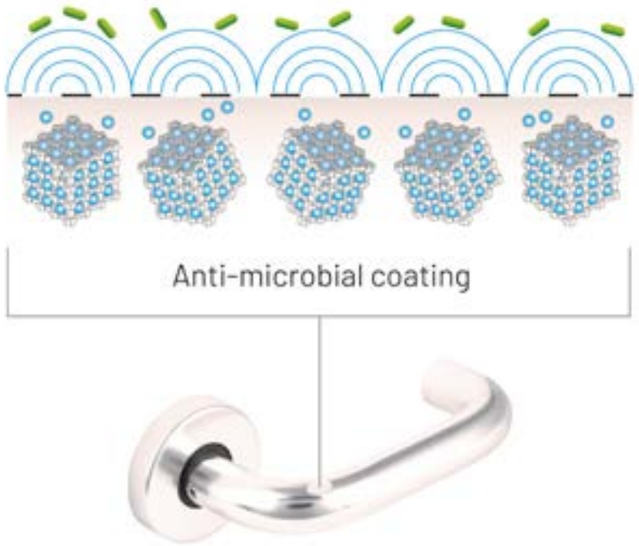

Legislation

EN 1906 – building hardware, lever handles and knob furniture

EN 1906 standard applies to the performance of door operating furniture, such as lever handles and door knobs, using test methods including durability, corrosion, security and other factors related to the application of lock and latch furniture.

EN 1906 classification key

	EN 1906:2010 Grading scope
CATEGORY OF USE Four categories of use are identified: **Grade 1**: Medium frequency use with high incentive to exercise care and a small chance of misuse **Grade 2**: Medium frequency use with some incentive to exercise care with some chance of misuse **Grade 3**: High frequency use by public or others with little incentive to exercise care and with a high chance of misuse **Grade 4**: High frequency use on doors subject to frequent violent use	(1-4)
DURABILITY Two grades are identified based on the application of additional forces to the door furniture in order to simulate the conditions of use likely to be experienced in the field. **Grade 6:** Medium use – 100 000 cycles **Grade 7:** High use – 200 000 cycles	(6-7)
DOOR MASS/SIZE No requirement.	(0)
FIRE BEHAVIOUR AND RESISTANCE Two grades are identified: **Grade 0:** Not suitable for fire/smoke resistant door assemblies **Grade 1:** Suitable for fire/smoke resistant door assemblies *Note: Grade 1 classification only identifies that the furniture has been designed for use on fire/smoke control doors. Additional fire test reports are required to confirm the actual fire performance*	(0/1)
SAFETY Two grades are identified: **Grade 0:** Normal use **Grade 1:** Safety application. Handles must have high strength handle-to-plate and plate-to-door fixing and/or handle-to-spindle fixing to endure a person grabbing in order to prevent falling. It is recommended that Grade 1 furniture is used at the top of staircases	(0/1)

ASSA ABLOY
Opening Solutions

	EN 1906:2010 Grading scope
CORROSION RESISTANCE Five grades of corrosion resistance are identified: **Grade 0:** No defined corrosion resistance **Grade 1:** Mild resistance **Grade 2:** Moderate resistance **Grade 3:** High resistance **Grade 4:** Very high resistance (recommended for use in exposed marine atmospheres or very polluted industrial environments)*	(0-4)
SECURITY Five grades of burglary attack are identified: **Grade 0:** Not approved for use on burglary resistant doors **Grade 1:** Mild burglary resistance **Grade 2:** Moderate burglary resistance **Grade 3:** High burglary resistance **Grade 4:** Extra high burglary resistance	(0-4)
TYPE OF OPERATION Three grade types are identified: **Type A:** Spring assisted furniture **Type B:** Spring loaded furniture **Type U:** Unsprung furniture	(A/B/U)

*Certain products in the door furniture section have achieved Grade 5 in corrosion resistance, as they have been tested above and beyond the standard.

BS 8300-2:2018 – design of an accessible and inclusive built environment

BS 8300 establishes the recommended dimensions and mounting positions for operating hardware such as lever and pull handles. This helps less able users to overcome access restrictions in a building as all door opening furniture is operated one-handed without the need to grasp or twist.

Recommended dimensions

Lever handles

- Securely fixed to door by bolt-through fixings
- Minimum dimensions of 95mm inside, 45mm clearance from the door face to the inside of handle and a minimum of 19mm diameter

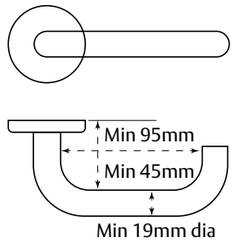

Pull handles

- Bolt through fixed to door and have roses to aid the partially sighted
- Minimum dimensions of 45mm clearance from the door face to the inside of the handle, 19mm - 35mm diameter and 400mm pull handle length
- For users with visual impairments, light reflective value (LRV) is used to measure the visual contrast between the door and its operating hardware. We would recommend a minimum light reflective value of 30 points of difference to be used to meet this standard

More details on BS 8300 can be found in the Standards and Legislation section.

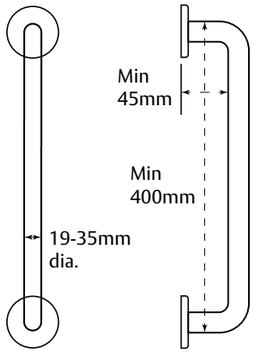

Other important legislation

- EN 179†

†Further information can be found in the introduction of the Panic and Emergency Hardware section

Further legislation and certification information can be found in the Standards and legislation section

ASSA ABLOY
Opening Solutions

Product selector

		Lever handles											Lever handles								
		Commercial				Classic					Distinction		Scanflex								
		J100001	J100002	J100005	J100010	6640	6696	6647	696	640	6655		Nordic U	Nordic L	Copenhagen	Oslo	Norway	Sweden	Denmark	Iceland	Finland
Type	Unsprung								●	●			●	●	●	●	●	●	●	●	●
	Sprung	●	●	●	●	●	●	●			●										
Style	DIN	●	●	●	●								●	●	●	●	●	●	●	●	●
	Scandinavian					●	●	●	●	●	●		●	●	●	●	●	●	●	●	●
Material	304 stainless steel	●	●	●	●								●	●	●	●	●	●	●	●	●
	316 stainless steel																				
	Solid brass					●	●	●	●	●											
	Tubular brass										●										
Diameter	16mm																				
	19mm	●	●	●	●						●		●		●	●			●	●	●
	22mm																	●			
	25mm																				
	32mm																				
Door type	Timber	●	●	●	●	●	●	●	●	●	●		●	●	●	●	●	●	●	●	●
	Metal	●	●	●	●	●	●	●	●	●	●		●	●	●	●	●	●	●	●	●
Fixing type	Face fixed																				
	Bolt through	●	●	●	●	●	●	●	●	●	●		●	●	●	●	●	●	●	●	●
	Back-to-back																				
	Concealed	●	●	●	●	●	●	●	●	●	●		●	●	●	●	●	●	●	●	●
Corrosion	Grade 1&2																				
	Grade 3&4	●	●	●		●	●	●	●	●	●		●	●	●	●	●	●	●	●	●
Features	Antimicrobial					●	●	●	●	●											
	BS 8300	●									●										
Certification	EN 1906	●	●	●	●	●	●	●	●	●	●		●	●	●	●	●	●	●	●	●
Fire rating	Timber FD30	●	●	●	●	●	●	●	●	●	●		●	●	●	●	●	●	●	●	●
	Timber FD60	●	●	●	●	●	●	●	●	●	●		●	●	●	●	●	●	●	●	●
	Metal FD90					●	●	●	●	●											
	Metal FD120										●		●	●	●	●	●	●	●	●	●
	Metal FD240	●	●	●	●																

ASSA ABLOY
Opening Solutions

Product selector

		Lever handles			Pull handles														
		Ruko-Line		Marine grade	Commercial					Scanflex				Ruko-Line					
		U19	L19	Straight/ Cranked	25mm T bar	19mm single	22mm single	22mm back-to-back		25mm bolt through	25mm back -to-back	32mm bolt through	32mm back -to-back	16mm back -to-back	19mm bolt through	25mm bolt through	25mm back -to-back	32mm bolt through	32mm back -to-back
Type	Unsprung	●	●																
	Sprung			●															
Style	DIN	●	●																
	Scandinavian	●	●																
Material	304 stainless steel				●	●	●	●		●	●	●	●						
	316 stainless steel	●	●	●										●	●	●	●	●	●
	Solid brass		●																
	Tubular brass		●																
Diameter	16mm													●					
	19mm	●	●	●		●									●				
	22mm						●	●											
	25mm									●	●					●	●		
	32mm											●	●					●	●
Door type	Timber	●	●	●	●	●	●	●		●	●	●	●	●	●	●	●	●	●
	Metal	●	●	●						●	●	●	●	●	●	●	●	●	●
Fixing type	Face fixed																		
	Bolt through	●	●	●		●	●			●		●			●	●		●	
	Back-to-back					●		●			●		●	●			●		●
	Concealed	●	●	●															
Corrosion	Grade 1&2																		
	Grade 3&4	●	●	●	●	●	●	●		●	●	●	●						
Features	Antimicrobial																		
	BS 8300	●																	
Certification	EN 1906	●	●	●															
Fire rating	Timber FD30	●	●																
	Timber FD60	●	●	●															
	Metal FD90																		
	Metal FD120	●	●																
	Metal FD240			●															

Commercial lever and pull handles

The J1000 range has a variety of styles to accommodate and satisfy existing and new build applications. The products meet the commercial market requirements for high resistance on corrosion and have gone through rigorous testing to demonstrate durability and uncompromised quality. Every day, thousands of the J1000 lever sets are used across the globe.

The J1000 range has concealed bolt through fixings to provide a robust installation. This feature ensures minimal risk of the lever being pulled from the door providing enhanced security. The grade 304 sprung lever feature significantly reduces the potential of wear and tear to lockcases. When used as a full assembly with our HD72 escape sashlocks it is compliant with EN 179:2008 which makes this range an ideal solution for applications where locked doors on escape routes are needed.

The handles in the range are non-handed - one handle suits both left and right configurations for simplicity. Our handles also meet grade 7 durability against EN 1906, giving peace of mind of product capability.

Range benefits

- Meets EN 1906
- Meets EN 179 when used with HD72 ESL
- Suitable for timber fire doors up to 30 minutes or 60 minutes
- Suitable for metal fire doors up to 240 minutes
- Suitable for a variety of applications or sectors such as commercial, government buildings, hospitals, schools and universities

ASSA ABLOY
Opening Solutions

J1000 01 style lever

Return to door lever on round rose with a stainless steel finish.

Features and benefits

- Durable and maintenance free stainless steel door handles
- Return-to-door lever curves back towards the door for easier hand grip whilst avoiding clothing being caught on lever handle
- Robustly designed with corrosive resistant grade 304 stainless steel

Classification code

4	7	-	1	0	5	0	B
(1-4)	(6/7)	-	(0/1)	(0/1)	(0-4)	(0-4)	(A/B/U)

EN 1906:2002

5 YEAR GUARANTEE

EPD®

Certification

Certified in compliance with	EN 1906, EN 1634-1, EN 1670, BS 8300 EN 179 only when used with HD72ESL escape sashlock
Suitable for fire doors	Timber FD30/FD60, metal FD240
Guarantee	5 years

Specification

Handle type	Sprung
Fixing	Bolt through (concealed fixings)
Handing	Non-handed
Locks	UK/DIN
Door type	Timber, metal
Handle diameter / length / projection	19mm / 140mm / 55mm
Rose diameter / projection	54mm / 8mm
Door thickness	32 – 54mm
Material	Stainless steel (grade 304)
Finish	SS
Supplied with	Push on rose as standard. Screw on rose available on request
Accessories	See door furniture product accessories section for items such as escutcheons, blind roses, cylinder rings and thumb turns

Dimensions

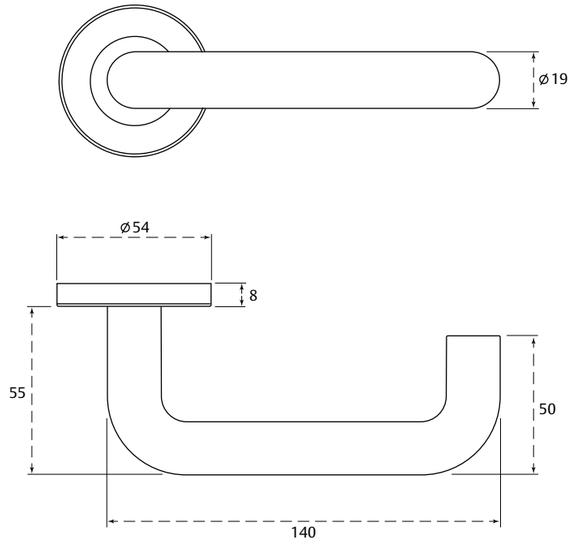

How to order

Order code	Description	Finish	Locks
J-1000RRS01SS	Return to door lever	SS	UK/DIN

ASSA ABLOY
Opening Solutions

J1000 02 style lever

Mitred lever on round rose with a stainless steel finish.

Features and benefits

- Durable and maintenance free stainless steel door handles
- Robustly designed with corrosive resistant grade 304 stainless steel

Classification code

4	7	-	1	0	5	0	B
(1-4)	(6/7)	-	(0/1)	(0/1)	(0-4)	(0-4)	(A/B/U)

EN 1906:2002

5 YEAR GUARANTEE

EPD®

Certification

Certified in compliance with	EN 1906, EN 1634-1, EN 1670
Suitable for fire doors	Timber FD30/FD60, metal FD240
Guarantee	5 years

Specification

Handle type	Sprung
Fixing	Bolt through (concealed fixings)
Handing	Non-handed
Locks	UK/DIN
Door type	Timber, metal
Handle diameter / length / projection	19mm / 140mm / 55mm
Rose diameter / projection	54mm / 8mm
Door thickness	32 – 54mm
Material	Stainless steel (grade 304)
Finish	SS
Supplied with	Push on rose as standard Screw on rose available on request
Accessories	See door furniture product accessories section for items such as escutcheons, blind roses, cylinder rings and thumb turns

Dimensions

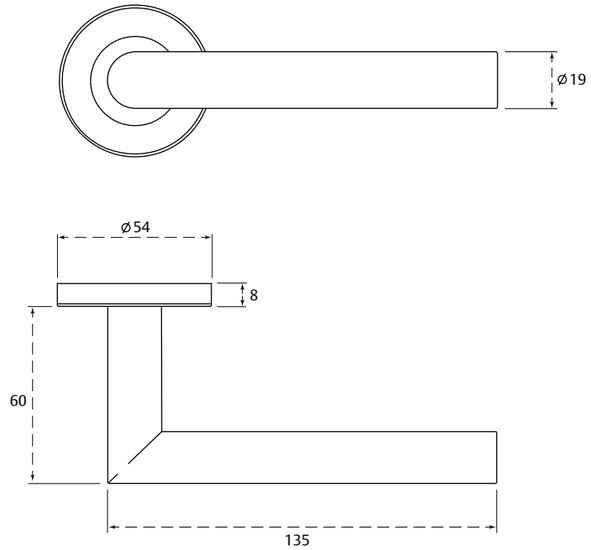

How to order

Order code	Description	Finish	Locks
J-1000RRS02SS	Mitred straight lever	SS	UK/DIN

ASSA ABLOY
Opening Solutions

J1000 05 style lever

Designer style lever on round rose in a stainless steel finish.

Features and benefits

- Durable and maintenance free stainless steel door handles
- Robustly designed with corrosive resistant grade 304 stainless steel

Classification code

4	7	-	1	0	5	0	B
(1-4)	(6/7)	-	(0/1)	(0/1)	(0-4)	(0-4)	(A/B/U)

EN 1906:2002

Certification

Certified in compliance with	EN 1906, EN 1634-1, EN 1670
Suitable for fire doors	Timber FD30/FD60, metal FD240
Guarantee	5 years

Specification

Handle type	Sprung
Fixing	Bolt through (concealed fixings)
Handing	Non-handed
Locks	UK/DIN
Door type	Timber, metal
Handle diameter / length / projection	19mm / 135mm / 60mm
Rose diameter / projection	54mm / 8mm
Door thickness	32 – 54mm
Material	Stainless steel (grade 304)
Finish	SS
Supplied with	Push on rose as standard Screw on rose available on request
Accessories	See door furniture product accessories section for items such as escutcheons, blind roses, cylinder rings and thumb turns

Dimensions

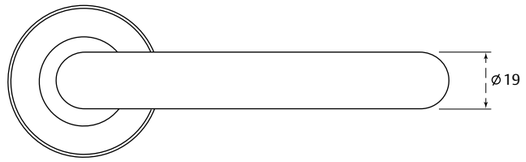

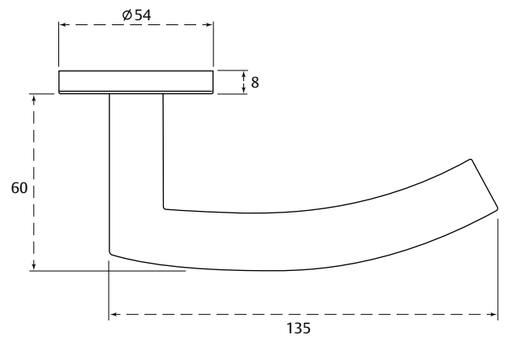

How to order

Order code	Description	Finish	Locks
J-1000RRS05SS	Design lever	SS	UK/DIN

ASSA ABLOY
Opening Solutions

J1000 10 style lever

Entrance lever on round rose with a stainless steel finish.

Features and benefits

- Durable and maintenance free stainless steel door handles
- Robustly designed with corrosive resistant grade 304 stainless steel

Classification code

4	7	-	1	0	5	0	B
(1-4)	(6/7)	-	(0/1)	(0/1)	(0-4)	(0-4)	(A/B/U)

EN 1906:2002

5 YEAR GUARANTEE

EPD®

Certification

Certified in compliance with	EN 1906, EN 1634-1, EN 1670
Suitable for fire doors	Timber FD30/FD60, metal FD240
Guarantee	5 years

Specification

Handle type	Sprung
Fixing	Bolt through (concealed fixings)
Handing	Non-handed
Locks	UK/DIN
Door type	Timber, metal
Handle diameter / length / projection	19mm / 135mm / 60mm
Rose diameter / projection	54mm / 8mm
Door thickness	32 – 54mm
Material	Stainless steel (grade 304)
Finish	SS
Supplied with	Push on rose as standard Screw on rose available on request
Accessories	See door furniture product accessories section for items such as escutcheons, blind roses, cylinder rings and thumb turns

Dimensions

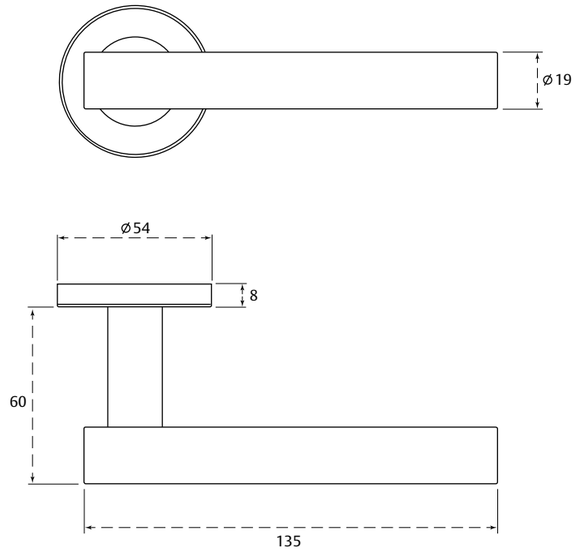

How to order

Order code	Description	Finish	Locks
J-1000RRS10SS	Entrance lever	SS	UK/DIN

25mm T bar pull handle

Straight T bar stainless steel pull handle.

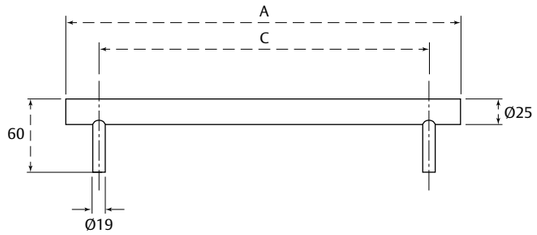

Features and benefits

- Robustly designed with corrosive resistant grade 304 stainless steel
- For modern, commercial and residential applications
- Classic tubular design
- Strong and hardwearing

Specification

5 YEAR GUARANTEE

Fixing	Bolt through and back-to-back fixings available
Handing	Non-handed
Door type	Timber
Handle diameter / length	25mm / 400mm, 600mm, 750mm, 1200mm, 1800mm
Material	Stainless steel (grade 304)
Finish	SS
Supplied with	Timber fixings

Certification

Guarantee	5 years

How to order

Order code	Description	Finish	Locks
XL003830	SSS 400x25mm (1600mm centres) guardsman pull handle	SS	UK/DIN
XL003831	SSS 600x25mm (450mm centres) guardsman pull handle	SS	UK/DIN
XL003833	SSS 750x25mm (650mm centres) guardsman pull handle	SS	UK/DIN
XL003836	SSS 1200x25mm (1000mm centres) guardsman pull handle	SS	UK/DIN
XL003838	SSS 1800x25mm (1600mm centres) guardsman pull handle	SS	UK/DIN

19mm single pull handle

01 stainless steel straight pull handle.

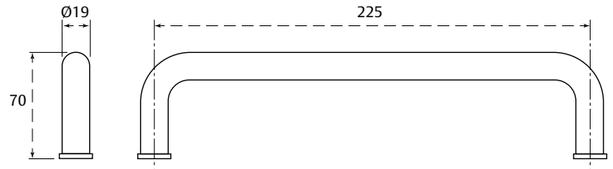

Features and benefits

- Robustly designed with corrosive resistant grade 304 stainless steel
- Suitable for a variety of applications or sectors such as commercial, government buildings, hospitals, schools and universities for commercial and residential applications

Specification

5 YEAR GUARANTEE

Fixing	Bolt through fixing
Handing	Non-handed
Door type	Timber
Handle diameter / length	19mm / 150 and 225mm
Material	Stainless steel (grade 304)
Finish	SS
Supplied with	Timber fixings

Certification

Certified in compliance with	EN 1670
Guarantee	5 years

How to order

Order code	Description	Finish	Locks
J-PH01X150SS	01 pull handle 19 x 150mm	SS	UK/DIN
J-PH01X225SS	01 pull handle 19 x 225mm	SS	UK/DIN

22mm single pull handle

07 stainless steel straight pull handle.

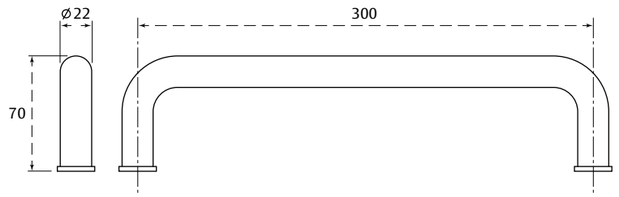

Features and benefits

- Robustly designed with corrosive resistant grade 304 stainless steel
- Suitable for a variety of applications or sectors such as commercial, government buildings, hospitals, schools and universities for commercial and residential applications

Specification

5 YEAR GUARANTEE

Fixing	Bolt through fixing
Handing	Non-handed
Door type	Timber
Handle diameter / length	22mm / 300 and 425mm
Material	Stainless steel (grade 304)
Finish	SS
Supplied with	Timber fixings

Certification

Certified in compliance with	EN 1670
Guarantee	5 years

How to order

Order code	Description	Finish	Locks
J-PH07X300SS	07 pull handle 22 x 300mm	SS	UK/DIN
J-PH07X425SS	07 pull handle 22 x 425mm	SS	UK/DIN

22mm back-to-back pull handle

03 back-to-back stainless steel pull handle.

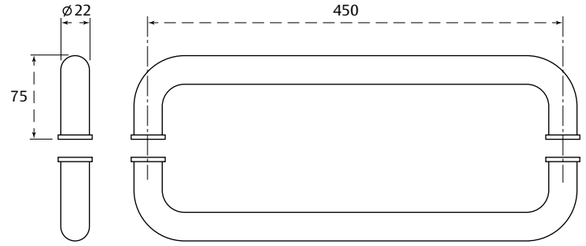

Features and benefits

- Robustly designed with corrosive resistant grade 304 stainless steel
- Suitable for a variety of applications or sectors such as commercial, government buildings, hospitals, schools and universities for commercial and residential applications

Specification

5 YEAR GUARANTEE

Fixing	Back-to-back
Handing	Non-handed
Door type	Timber
Handle diameter / length	22mm / 300 and 450mm
Material	Stainless steel (grade 304)
Finish	SS
Supplied with	Timber fixings

Certification

Certified in compliance with	EN 1670
Guarantee	5 years

How to order

Order code	Description	Finish	Locks
J-PH03X300BTBSS-22	03 btb pull handle 22mm x d 300mm	SS	UK/DIN
J-PH03X450BTBSS-22	03 btb pull handle 22mm x d 450mm	SS	UK/DIN

Classic range

This functional and robust range includes handles with round roses, thumb turns, escutcheons and toilet accessories which are supplied in a set. The solid brass lever handle range offers strength and simplicity in design which provides excellent performance at an economical price. The special cover plates can be fitted to conceal the fixings, giving a more aesthetically pleasing appearance. Round roses prepared with the 30mm bolt through fixing centres are suitable for use with the Scandinavian lockcases.

All handles in the Classic range are suitable for general and heavy use and can be finished with an antimicrobial coating, providing additional safety for surfaces in commercial areas.

Range benefits

- Manufactured from solid brass to ensure durability and strength
- Meets performance requirements under EN 1906
- Suitable for timber fire doors up to 60 minutes
- Suitable for a variety of applications or sectors such as public, commercial, hospitals, schools and universities
- Available with an antimicrobial coating
- Suitable for Scandinavian lockcases only
- Double action to permit flip up operation with Scandinavian locks
- Available in sprung or unsprung with bolt through fixings

ASSA ABLOY
Opening Solutions

6640 sprung lever handle

6640 solid brass sprung lever handle with captive round rose.

Features and benefits

- Suitable for commercial/ heavy commercial use
- Available with an antimicrobial coating
- Features heavy springing so is suitable for low sprung or unsprung lockcases
- Suitable for Scandinavian lockcases only
- When specifying with Scandinavian lockcases the combination will not be suitable for less able bodied users

Classification code

4	7	-	1	0	4	0	B
(1-4)	(6/7)	-	(0/1)	(0/1)	(0-4)	(0-4)	(A/B/U)

EN 1906:2002

2 YEAR GUARANTEE

EPD®

Specification

Handle type	Sprung
Handing	Left/right available in set
Locks	Compatible with unsprung lockcases
Door type	Timber, metal
Handle length / projection	110mm / 55mm
Rose diameter / projection	52mm / 6.5mm
Door thickness	40 - 57 standard and additional spindle 58 - 75mm
Material	Solid brass
Finish	SC, PB
Supplied with	Screws, spindle
Accessories	See door furniture product accessories section for items such as escutcheons, blind roses, cylinder rings and thumb turns

Dimensions

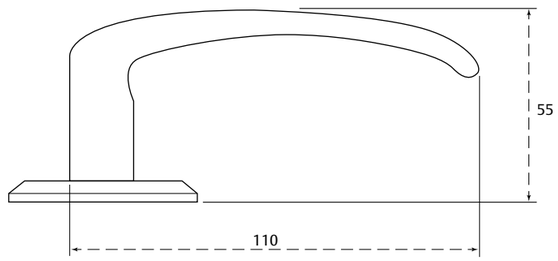

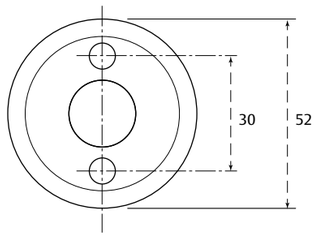

Certification

Certified in compliance with	EN 1634-1, EN 1906
Suitable for fire doors	Timber FD30/FD60, metal FD90
Guarantee	2 years

How to order

Order code	Description	Finish	Locks
47004151213	6640 handle	SC	Scandinavian
47004151220	6640 handle	PB	Scandinavian

ASSA ABLOY
Opening Solutions

6696 sprung lever handle

6696 solid brass sprung lever handle with captive round rose.

Features and benefits

- Solid captive roses and bolt through fixings
- Suitable for commercial / heavy commercial use
- Available with an antimicrobial coating
- Suitable for Scandinavian lockcases only

Classification code

4	7	-	1	0	4	0	B
(1-4)	(6/7)	-	(0/1)	(0/1)	(0-4)	(0-4)	(A/B/U)

EN 1906:2002

2 YEAR GUARANTEE

Certification

Certified in compliance with	EN 1634-1, EN 1906
Suitable for fire doors	Timber FD30/FD60, metal FD90
Guarantee	2 years

Specification

Handle type	Sprung
Fixing	Bolt through fixing
Handing	Left/right available in set
Locks	Compatible with unsprung lockcases
Door type	Timber, metal
Handle length / projection	106mm / 54mm
Rose diameter / projection	52mm / 6.5mm
Door thickness	40 - 57 standard and additional spindle 58 - 75mm
Material	Solid brass
Finish	SC, PB
Supplied with	Screws, spindle
Accessories	See door furniture product accessories section for items such as escutcheons, blind roses, cylinder rings and thumb turns

Dimensions

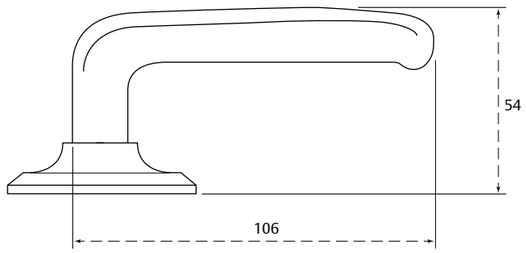

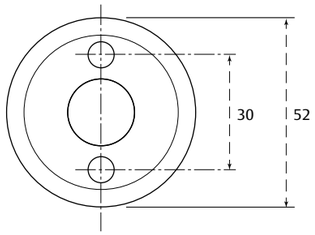

How to order

Order code	Description	Finish	Locks
47004351213	6696 handle	SC	Scandinavian
47004351220	6696 handle	PB	Scandinavian

ASSA ABLOY
Opening Solutions

6647 sprung lever handle

6647 solid brass sprung lever handle with captive round rose.

Features and benefits

- Solid captive roses and bolt through fixings
- Suitable for commercial / heavy commercial use
- Available with an antimicrobial coating
- Suitable for Scandinavian lockcases only

Classification code

4	7	-	1	0	4	0	B
(1-4)	(6/7)	-	(0/1)	(0/1)	(0-4)	(0-4)	(A/B/U)

EN 1906:2002

2 YEAR GUARANTEE

Certification

Certified in compliance with	EN 1634-1, EN 1906
Suitable for fire doors	Timber FD30/FD60, metal FD90
Guarantee	2 years

Specification

Handle type	Sprung
Fixing	Bolt through
Handing	Left/right available in set
Locks	Compatible with unsprung lockcases
Door type	Timber, metal
Handle length / projection	120mm / 57mm
Rose diameter / projection	52mm / 6.5mm
Door thickness	40 - 57 standard and additional spindle 58 - 75mm
Material	Solid brass
Finish	SC
Supplied with	Screws, spindle
Accessories	See door furniture product accessories section for items such as escutcheons, blind roses, cylinder rings and thumb turns

Dimensions

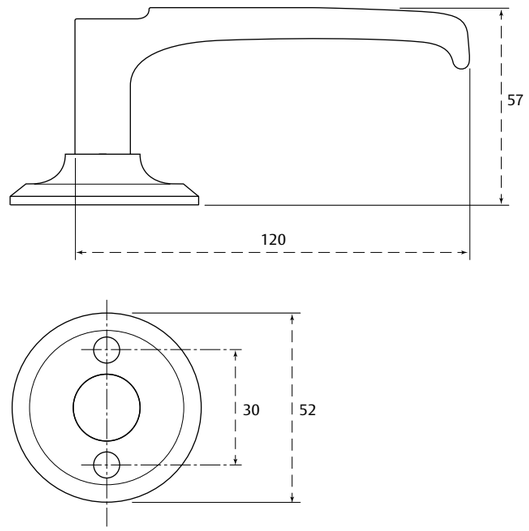

How to order

Order code	Description	Finish	Locks
47011051213	6647 handle	SC	Scandinavian

ASSA ABLOY
Opening Solutions

696 unsprung lever handle

696 solid brass unsprung lever handle on concealed fix threaded rose.

Features and benefits

- Lever on concealed fix threaded rose (if purchased with cover caps)
- Suitable for commercial / heavy commercial use
- Available with an antimicrobial coating
- Cover plates can be fitted to conceal the heads of the fixing screws and nipples for more aesthetically pleasing appearance
- Suitable for Scandinavian fixing only
- Cover caps available

Classification code

4	7	-	1	0	4	0	U
(1-4)	(6/7)	-	(0/1)	(0/1)	(0-4)	(0-4)	(A/B/U)

EN 1906:2002

2 YEAR GUARANTEE

Certification

Certified in compliance with	EN 1634-1, EN 1906
Suitable for fire doors	Timber FD30/FD60, metal FD90
Guarantee	2 years

Specification

Handle type	Unsprung
Fixing	Bolt through
Handing	Left/right available in set
Locks	Compatible with sprung lockcases
Door type	Timber, metal
Handle length / projection	106mm / 55mm
Rose diameter / projection	52mm / 6.5mm
Door thickness	40 - 57 standard and additional spindle 58 - 75mm
Material	Solid brass
Finish	SC, PB
Supplied with	Screws, spindle
Accessories	See door furniture product accessories section for items such as escutcheons, blind roses, cylinder rings and thumb turns

Dimensions

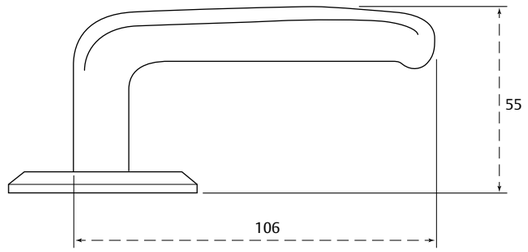

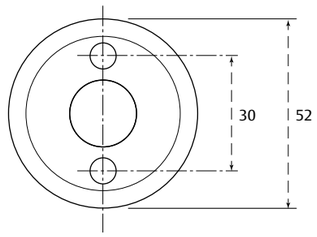

How to order

Order code	Description	Finish	Locks
47003151213	696 handle	SC	Scandinavian
47003151220	696 handle	PB	Scandinavian
36346000013	Cover cap & silver ring/washer	SC	N/A

ASSA ABLOY
Opening Solutions

640 unsprung lever handle

640 solid brass unsprung lever handle on concealed fix threaded rose.

Features and benefits

- Lever on concealed fix threaded rose (if purchased with cover caps)
- Suitable for commercial/ heavy commercial use
- Available with an antimicrobial coating
- Cover plates can be fitted to conceal the heads of the fixing screws and nipples for more aesthetically pleasing appearance

Classification code

4	7	-	1	0	4	0	U
(1-4)	(6/7)	-	(0/1)	(0/1)	(0-4)	(0-4)	(A/B/U)

EN 1906:2002

2 YEAR GUARANTEE

Certification

Certified in compliance with	EN 1634-1, EN 1906
Suitable for fire doors	Timber FD30/FD60, metal FD90
Guarantee	2 years

Specification

Handle type	Unsprung
Fixing	Bolt through
Handing	Left/right available in set
Locks	Compatible with sprung lockcases
Door type	Timber, metal
Handle length / projection	110mm / 55mm
Rose diameter / projection	52mm / 6.5mm
Door thickness	40 - 57 standard and additional spindle 58 - 75mm
Material	Solid brass
Finish	SC and PB
Supplied with	Screws, spindle
Accessories	See door furniture product accessories section for items such as escutcheons, blind roses, cylinder rings and thumb turns

Dimensions

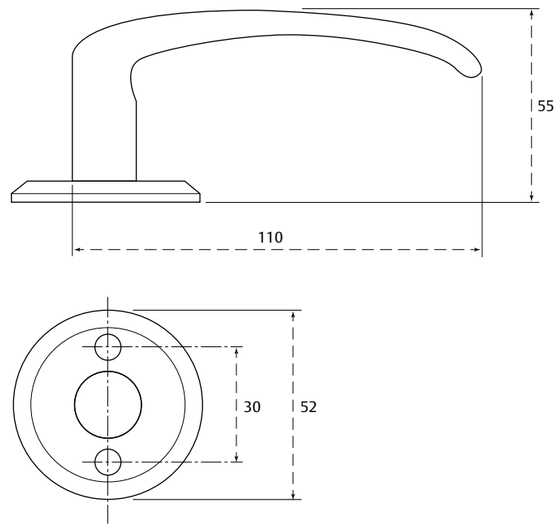

How to order

Order code	Description	Finish	Locks
47002251213	640 handle	SC	Scandinavian
47002251220	640 handle	PB	Scandinavian
36346000013	Cover cap & silver ring/washer	SC	N/A

Distinction range

The Distinction lever range offers clean, elegant lines featuring safety return handles which are made from tubular brass. This provides strength, durability and longevity for the product life cycle. The range is suitable for general and heavy use and ideal for external use in areas where hygiene is a priority. The Distinction range includes safety return handles that meet BS 8300, this helps public buildings become more accessible and inclusive.

The range includes round rose return to door levers, thumb turns, escutcheons and toilet accessories suitable for Scandinavian lockcases only. All Distinction handles are double action to permit flip up operation with Scandinavian locks. An antimicrobial coating is also available if required to protect the door from microbial properties.

Range benefits

- Meets performance requirements under EN 1906
- Meets commercial requirements under Equality Act: 2010
- Suitable for timber fire doors up to 60 minutes
- Suitable for metal fire doors up to 120 minutes
- Manufactured from brass to ensure durability and strength
- Suitable for timber and steel doors
- Distinction lever is suitable for Scandinavian locks only
- Suitable for a variety of applications or sectors such as public, commercial, hospitals, schools and universities

ASSA ABLOY
Opening Solutions

6655 lever handle

Tubular sprung lever handle with brass round rose and bolt through fixing.

Features and benefits

- Meets BS 8300 and EN 1906 requirements
- Double action to permit flip up operation with Scandinavian locks
- Lever on concealed fix threaded rose (if cover caps are used)
- Suitable for commercial/ heavy commercial use
- Available with an antimicrobial coating
- Suitable for Scandinavian lockcases only
- Cover caps available

Classification code

4	7	-	1	0	4	0	U
(1-4)	(6/7)	-	(0/1)	(0/1)	(0-4)	(0-4)	(A/B/U)

EN 1906:2002

Certification

Certified in compliance with	EN 1634-1, BS 8300, EN 1906:2002
Suitable for fire doors	Timber FD30/FD60, metal FD120
Guarantee	2 years

Specification

Handle type	Sprung
Fixing	Bolt through fixing
Handing	Left/right in set
Locks	Compatible with unsprung lockcases
Door type	Timber, metal
Handle diameter / length / projection	19mm / 140mm / 64mm
Rose diameter / projection	52mm / 6.5mm
Door thickness	40 - 57 standard and additional spindle 58 - 75mm
Material	Tubular brass
Finish	SC
Supplied with	1 spindle and fixings Half split spindle available separately
Accessories	See door furniture product accessories section for items such as escutcheons, blind roses, cylinder rings and thumb turns

Dimensions

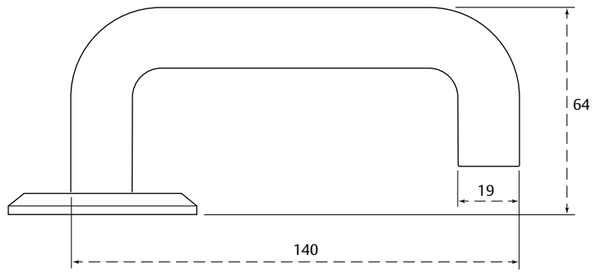

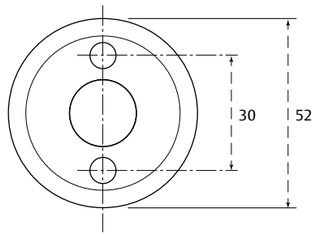

How to order

Order code	Description	Finish	Locks
36244551213	6655 handle set	SC	Scandinavian
36346000013	Cover cap & silver ring/washer	SC	N/A

ASSA ABLOY
Opening Solutions

20C-1/2 6655 half-set lever handle with blind rose

Tubular brass sprung half lever handle with round rose and bolt through fixing.

Features and benefits

- Meets BS 8300 requirements
- Double action to permit flip up operation with Scandinavian locks
- Lever on concealed fix threaded rose (if cover caps are used)
- Suitable for commercial / heavy commercial use
- Available with an antimicrobial coating
- Suitable for Scandinavian locks only
- Product can be used with access control where the lever is required on one side of the door
- Suitable for entrance doors to apartment buildings

Classification code

4	7	-	1	0	4	0	B
(1-4)	(6/7)	-	(0/1)	(0/1)	(0-4)	(0-4)	(A/B/U)

EN 1906:2002

2 YEAR GUARANTEE

EPD®

Certification

Certified in compliance with	EN 1634-1, BS 8300, EN 1906
Suitable for fire doors	Timber FD30/FD60, metal FD120
Guarantee	2 years

Specification

Handle type	Sprung
Fixing	Bolt through fixing
Handing	Left/right in set
Locks	Compatible with unsprung lockcases
Door type	Timber, metal
Handle diameter / length / projection	19mm / 140mm / 64mm
Rose diameter / projection	53mm / 6.5mm
Door thickness	40 - 57 standard and additional spindle 58 - 75mm
Material	Tubular brass
Finish	PB, SC
Supplied with	1 spindle and fixings, supplied with blind rose 992. Half split spindle available separately
Accessories	See door furniture product accessories section for items such as escutcheons, blind roses, cylinder rings and thumb turns

Dimensions

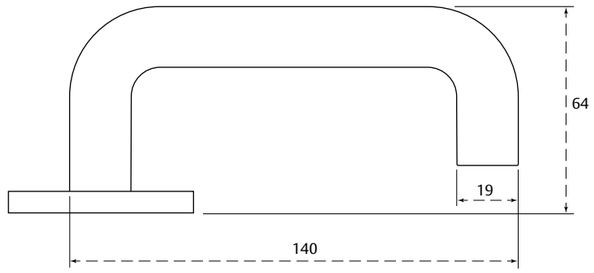

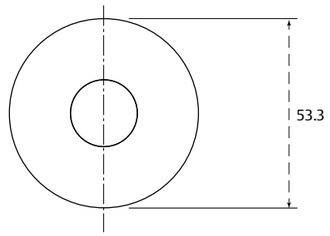

How to order

Order code	Description	Handing	Finish	Locks
10481851213	20C-1/2 6655 handle and blind rose	Right hand	SC	Scandinavian
10481851220	20C-1/2 6655 handle and blind rose	Right hand	PB	Scandinavian
10481951213	20C-1/2 6655 handle and blind rose	Left hand	SC	Scandinavian
10481951220	20C-1/2 6655 handle and blind rose	Left hand	PB	Scandinavian
36346000013	Cover cap & silver ring/washer	N/A	SC	N/A

ScanFlex range

Our high specification lever handles complement our Scandinavian, DIN, and UK lock ranges. This range includes round rose lever handles, pull handles, cylinder accessories, toilet accessories, door stops and signage.

Scanflex levers and pull handles are made of 304 stainless steel. They are suitable for general and heavy use and ideal for external areas where hygiene is a priority.

The Scanflex safety return handle meets BS 8300 which helps buildings become more accessible and inclusive.

The dual fixings of the lever handles can accommodate buildings with multiple lockcases, while the unsprung half set levers are designed for left or right applications. Supplied with nylon inserts, a solid installation is ensured when inserted to the modular lockcases. The door furniture sets are suitable for 32 to 65mm thick doors and our Scanflex lever is universally designed with dual fixings - 30mm fixings to accommodate Scandinavian locks and 38mm fixings to accommodate DIN/UK style.

On doors where lever handles are not required, we have a suite of door pulls designed for compatibility with the range of door furniture that can be used on timber and metal doors. We offer single or back-to-back pull handles in a range of lengths.

Range benefits

- Meets performance requirements under EN 1906
- Meets commercial requirements under Equality Act: 2010
- Suitable for timber fire doors up to 60 minutes
- Suitable for metal fire doors up to 120 minutes
- Made from stainless steel to ensure durability and strength
- Suitable for a variety of applications or sectors such as public, commercial, hospitals, schools and universities

Nordic U lever on rose

Return to door unsprung lever handle.

Features and benefits

- Meets BS 8300 requirements
- Robustly designed with corrosive resistant grade 304 stainless steel
- Dual rose to accommodate 30mm and 38mm fixing centers
- Suitable for external use

Classification code

4	7	-	1	0	4	0	U
(1-4)	(6/7)	-	(0/1)	(0/1)	(0-4)	(0-4)	(A/B/U)

EN 1906:2010

Certification

Certified in compliance with	EN 1634-1, EN 1670, EN 1906, BS 8300
Suitable for fire doors	Timber FD30/FD60, metal FD120
Guarantee	2 years

Specification

Handle type	Unsprung
Fixing	Concealed bolt through fixing as standard
Handing	Non-handed
Locks	Compatible with sprung lockcases
Door type	Timber, metal
Handle diameter / length / projection	19mm / 142mm / 64mm
Rose diameter / projection	54mm / 6mm
Door thickness	32 - 65mm
Material	Stainless steel (grade 304)
Finish	SS
Supplied with	1x spindle (32 – 65mm) and screws
Accessories	See door furniture product accessories section for items such as escutcheons, blind roses, cylinder rings and thumb turns

Dimensions

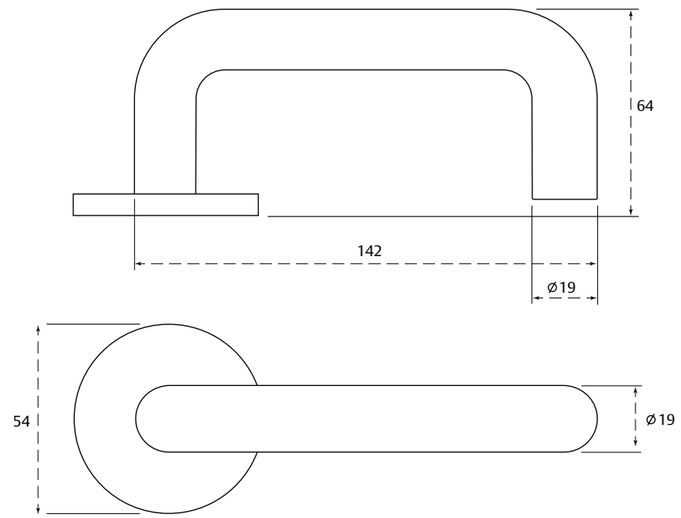

How to order

Order code	Description	Finish	Locks
95449500031	SF Nordic U 19mm lever handle	SS	Scandinavian/DIN/UK

Nordic L lever handle

L shaped stainless steel unsprung lever handle.

Features and benefits

- Robustly designed with corrosive resistant grade 304 stainless steel
- Suitable for timber doors providing long lasting usage
- Dual rose to accomodate 30mm and 38mm fixing centres
- Suitable for external use

Classification code

4 (1-4) | 7 (6/7) | - (-) | 1 (0/1) | 0 (0/1) | 4 (0-4) | 0 (0-4) | U (A/B/U)

EN 1906:2010

2 YEAR GUARANTEE

EPD®

Certification

Certified in compliance with	EN 1906, EN 1634-1, EN 1670
Suitable for fire doors	Timber FD30/FD60, metal FD120
Guarantee	2 years

Specification

Handle type	Unsprung
Fixing	Concealed bolt through fixing as standard
Handing	Non-handed
Locks	Compatible with sprung lockcases
Door type	Timber, metal
Handle diameter / length / projection	19mm / 135mm / 62mm
Rose diameter / projection	54mm / 6mm
Door thickness	32 - 65mm
Material	Stainless steel (grade 304)
Finish	SS
Supplied with	1x spindle (32 – 65mm) and screws
Accessories	See door furniture product accessories section for items such as escutcheons, blind roses, cylinder rings and thumb turns

Dimensions

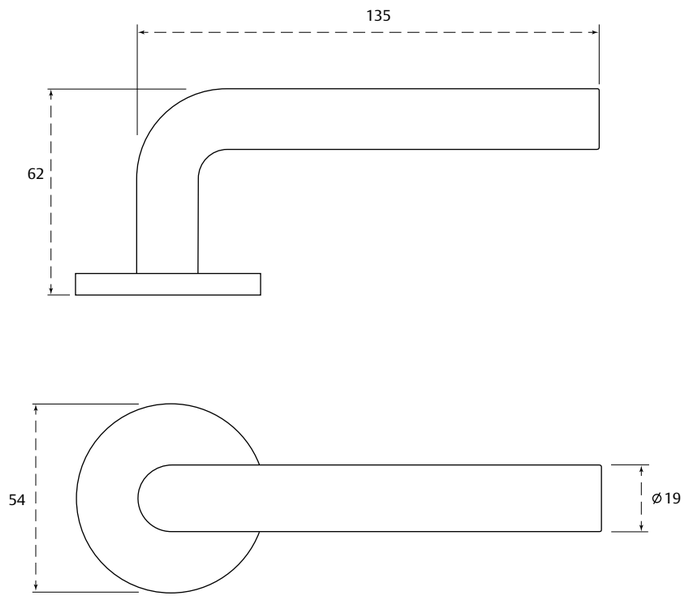

How to order

Order code	Description	Finish	Locks
95450300031	SF Nordic L 19mm lever handle	SS	Scandinavian/DIN/UK

ASSA ABLOY
Opening Solutions

Copenhagen lever handle

Modern brushed stainless steel unsprung lever handle.

Features and benefits

- Dual rose to accomodate 30mm and 38mm fixing centres
- Robustly designed with corrosive resistant grade 304 stainless steel

Classification code

4	7	-	1	0	4	0	U
(1-4)	(6/7)	-	(0/1)	(0/1)	(0-4)	(0-4)	(A/B/U)

EN 1906:2010

2 YEAR GUARANTEE

Certification

Certified in compliance with	EN 1906, EN 1634-1, EN 1670
Suitable for fire doors	Timber FD30/FD60, metal FD120
Guarantee	2 years

Specification

Handle type	Unsprung
Fixing	Concealed bolt through fixing as standard
Handing	Non-handed
Locks	Compatible with sprung lockcases
Door type	Timber, metal
Handle diameter / length / projection	19mm / 130mm / 65mm
Rose diameter / projection	54mm / 6mm
Door thickness	32 - 65mm
Material	Stainless steel (grade 304)
Finish	SS
Supplied with	1x spindle (32 – 65mm) and screws
Accessories	See door furniture product accessories section for items such as escutcheons, blind roses, cylinder rings and thumb turns

Dimensions

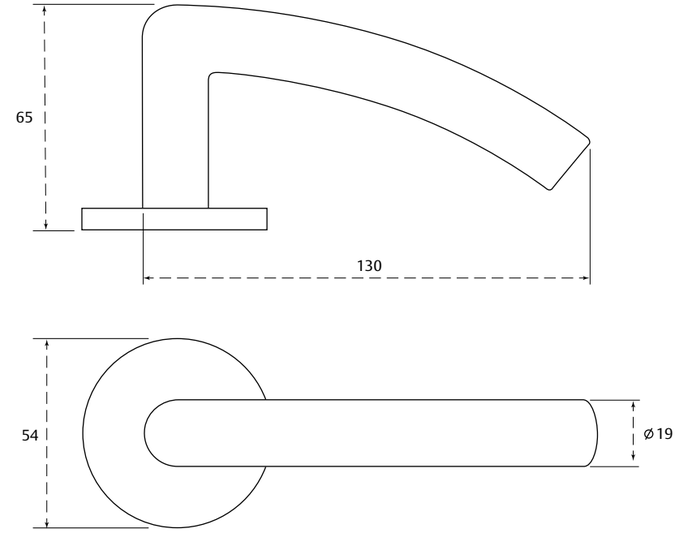

How to order

Order code	Description	Finish	Locks
95452000031	Copenhagen lever handle	SS	Scandinavian/DIN/UK

Oslo lever handle

Modern brushed T bar contemporary design unsprung lever handle.

Features and benefits

- Dual rose to accomodate 30mm and 38mm fixing centres
- Robustly designed with corrosive resistant grade 304 stainless steel

Classification code

4	7	-	1	0	4	0	U
(1-4)	(6/7)	-	(0/1)	(0/1)	(0-4)	(0-4)	(A/B/U)

EN 1906:2010

2 YEAR GUARANTEE

Certification

Certified in compliance with	EN 1670, EN 1906, EN1634-1
Suitable for fire doors	Timber FD30/FD60, metal FD120
Guarantee	2 years

Specification

Handle type	Unsprung
Fixing	Concealed bolt through fixing as standard
Handing	Non-handed
Locks	Compatible with sprung lockcases
Door type	Timber, metal
Handle diameter / length / projection	19mm / 135mm / 63mm
Rose diameter / projection	54mm / 6mm
Door thickness	32 - 65mm
Material	Stainless steel (grade 304)
Finish	SS
Supplied with	1x spindle (32 – 65mm) and screws
Accessories	See door furniture product accessories section for items such as escutcheons, blind roses, cylinder rings and thumb turns

Dimensions

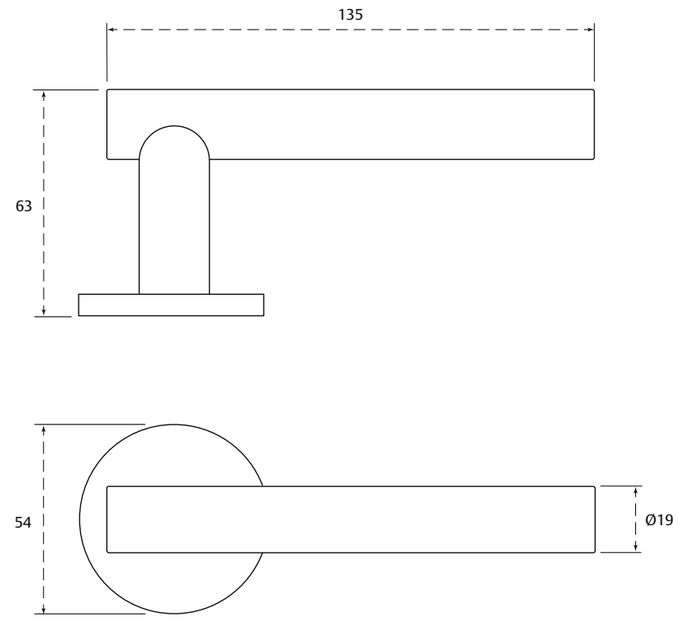

How to order

Order code	Description	Finish	Locks
95452100031	Oslo lever handle	SS	Scandinavian/DIN/UK

Norway lever handle

Modern brushed arch contemporary design unsprung lever handle.

Features and benefits

- Dual rose to accomodate 30mm and 38mm fixing centres
- Robustly designed with corrosive resistant grade 304 stainless steel

Classification code

4	7	-	1	0	4	0	U
(1-4)	(6/7)	-	(0/1)	(0/1)	(0-4)	(0-4)	(A/B/U)

EN 1906:2010

2 YEAR GUARANTEE

Certification

Certified in compliance with	EN 1670, EN 1906, EN 1634-1
Suitable for fire doors	Timber FD30/FD60, metal FD120
Guarantee	2 years

Specification

Handle type	Unsprung
Fixing	Concealed bolt through fixing as standard
Handing	Non-handed
Locks	Compatible with sprung lockcases
Door type	Timber, metal
Handle diameter / length / projection	18mm / 135mm / 61mm
Rose diameter / projection	54mm / 6mm
Door thickness	32 - 65mm
Material	Stainless steel (grade 304)
Finish	SS
Supplied with	1x spindle (32 – 65mm) and screws
Accessories	See door furniture product accessories section for items such as escutcheons, blind roses, cylinder rings and thumb turns

Dimensions

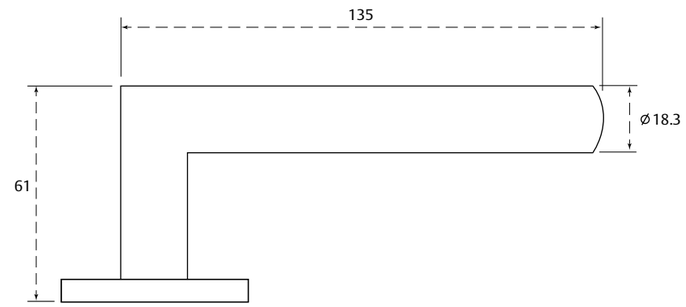

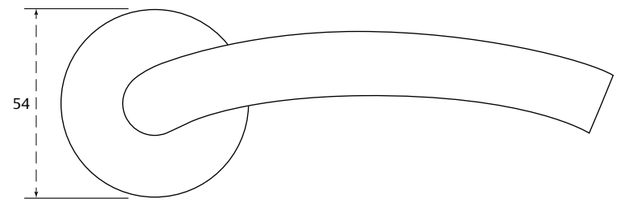

How to order

Order code	Description	Finish	Locks
95463400031	Norway lever handle	SS	Scandinavian/DIN/UK

Sweden lever handle

Modern brushed contemporary design unsprung lever handle.

Features and benefits

- Dual rose to accomodate 30mm and 38mm fixing centres
- Robustly designed with corrosive resistant grade 304 stainless steel

Classification code

4	7	-	1	0	4	0	U
(1-4)	(6/7)	-	(0/1)	(0/1)	(0-4)	(0-4)	(A/B/U)

EN 1906:2010

2 YEAR GUARANTEE

Certification

Certified in compliance with	EN 1906, EN 1634-1, EN 1670
Suitable for fire doors	Timber FD30/FD60, metal FD120
Guarantee	2 years

Specification

Handle type	Unsprung
Fixing	Concealed bolt through fixing as standard
Handing	Non-handed
Locks	Compatible with sprung lockcases
Door type	Timber, metal
Handle diameter / length / projection	22 x 15.5mm / 135mm / 65mm
Rose diameter / projection	54mm / 6mm
Door thickness	32 - 65mm
Material	Stainless steel (grade 304)
Finish	SS
Supplied with	1x spindle (32 – 65mm) and screws
Accessories	See door furniture product accessories section for items such as escutcheons, blind roses, cylinder rings and thumb turns

Dimensions

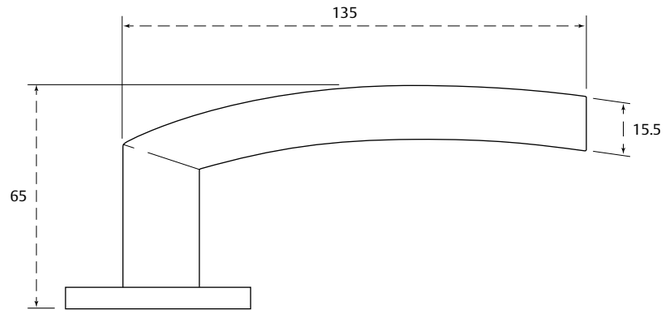

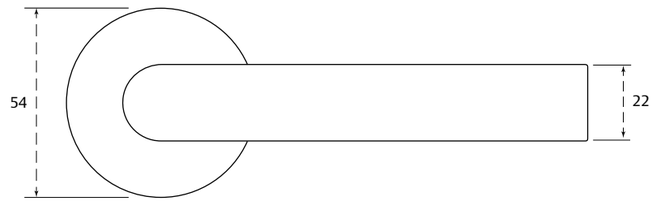

How to order

Order code	Description	Finish	Locks
95463300031	Sweden lever handle	SS	Scandinavian/DIN/UK

Denmark lever handle

Modern brushed contemporary design unsprung handle.

Features and benefits

- Dual rose to accomodate 30mm and 38mm fixing centres
- Robustly designed with corrosive resistant grade 304 stainless steel

Classification code

4	7	-	1	0	4	0	U
(1-4)	(6/7)	-	(0/1)	(0/1)	(0-4)	(0-4)	(A/B/U)

EN 1906:2010

2 YEAR GUARANTEE

Certification

Certified in compliance with	EN 1906, EN 1634-1, EN 1670
Suitable for fire doors	Timber FD30/FD60, metal FD120
Guarantee	2 years

Specification

Handle type	Unsprung
Fixing	Concealed bolt through fixing as standard
Handing	Non-handed
Locks	Compatible with sprung lockcases
Door type	Timber, metal
Handle diameter / length / projection	19 x 4.5mm / 137mm / 67mm
Rose diameter / projection	54mm / 6mm
Door thickness	32 - 65mm
Material	Stainless steel (grade 304)
Finish	SS
Supplied with	1x spindle (32 – 65mm) and screws
Accessories	See door furniture product accessories section for items such as escutcheons, blind roses, cylinder rings and thumb turns

Dimensions

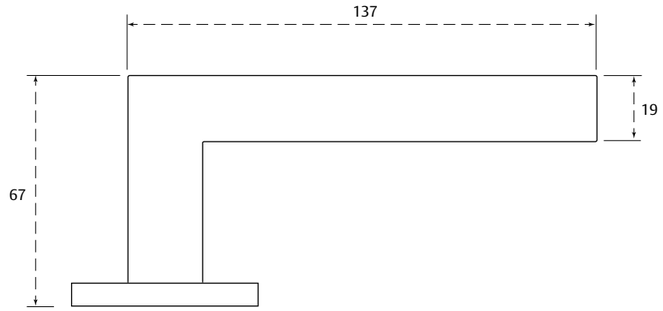

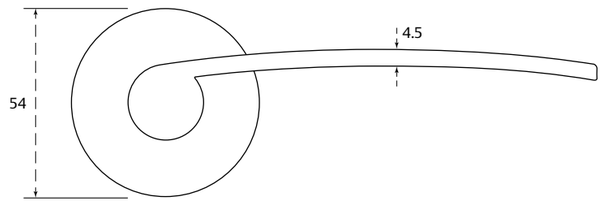

How to order

Order code	Description	Finish	Locks
95463100031	Denmark lever handle	SS	Scandinavian/DIN/UK

Iceland lever handle

Modern brushed contemporary design unsprung handle.

Features and benefits

- Dual rose to accomodate 30mm and 38mm fixing centres
- Robustly designed with corrosive resistant grade 304 stainless steel

Classification code

4	7	-	1	0	4	0	U
(1-4)	(6/7)	-	(0/1)	(0/1)	(0-4)	(0-4)	(A/B/U)

EN 1906:2010

2 YEAR GUARANTEE

Certification

Certified in compliance with	EN 1906, EN 1634-1, EN 1670
Suitable for fire doors	Timber FD30/FD60, metal FD120
Guarantee	2 years

Specification

Handle type	Unsprung
Fixing	Concealed bolt through fixing as standard
Handing	Non-handed
Locks	Compatible with sprung lockcases
Door type	Timber, metal
Handle diameter / length / projection	19mm / 134mm / 65mm
Rose diameter / projection	54mm / 6mm
Door thickness	32 - 65mm
Material	Stainless steel (grade 304)
Finish	SS
Supplied with	1x spindle (32 – 65mm) and screws
Accessories	See door furniture product accessories section for items such as escutcheons, blind roses, cylinder rings and thumb turns

Dimensions

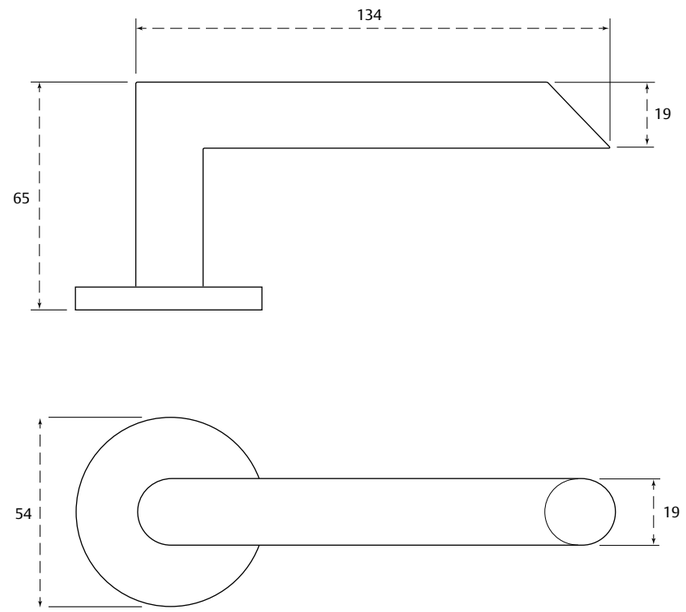

How to order

Order code	Description	Finish	Locks
95463500031	Iceland lever handle	SS	Scandinavian/DIN/UK

Finland lever handle

Modern brushed contemporary design unsprung handle.

Features and benefits

- Dual rose to accomodate 30mm and 38mm fixing centres
- Robustly designed with corrosive resistant grade 304 stainless steel

Classification code

4	7	-	1	0	4	0	U
(1-4)	(6/7)	-	(0/1)	(0/1)	(0-4)	(0-4)	(A/B/U)

EN 1906:2010

2 YEAR GUARANTEE

Certification

Certified in compliance with	EN 1906, EN 1634-1, EN 1670
Suitable for fire doors	Timber FD30/FD60, metal FD120
Guarantee	2 years

Specification

Handle type	Unsprung
Fixing	Concealed bolt through fixing as standard
Handing	Non-handed
Locks	Compatible with sprung lockcases
Door type	Timber, metal
Handle diameter / length / projection	27 x 16mm / 130mm / 61mm
Rose diameter / projection	54mm / 6mm
Door thickness	32 - 65mm
Material	Stainless steel (grade 304)
Finish	SS
Supplied with	1x spindle (32 – 65mm) and screws
Accessories	See door furniture product accessories section for items such as escutcheons, blind roses, cylinder rings and thumb turns

Dimensions

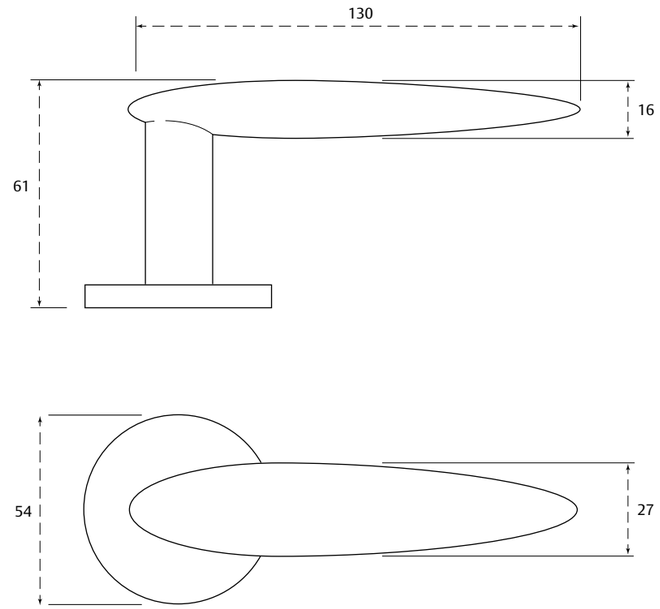

How to order

Order code	Description	Finish	Locks
95463200031	Finland lever handle	SS	Scandinavian/DIN/UK

ScanFlex pull handle

Pull handles in 25mm and 32mm diameters for use with ScanFlex door furniture range.

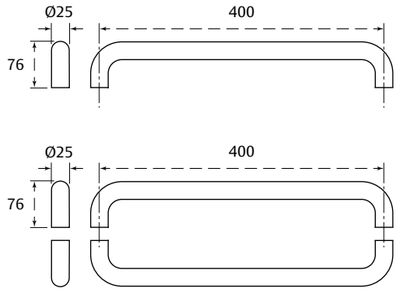

Features and benefits

- Door pulls designed for compatibility with ScanFlex range of door furniture for use on glass, timber and metal doors
- Supplied for single or double installation, with mounting bolts and accessories for glass doors
- Ideal for external areas where hygiene is a priority

Specification

Fixing	Bolt through fixing
Handing	Non-handed
Door type	Timber, metal
Handle diameter / projection	25, 32mm / 300, 400, 600mm
Door thickness	10 - 70mm
Material	Stainless steel (grade AISI 304L)
Finish	SS
Supplied with	Timber and metal fixings
Glass doors	Mounting bolts and accessories available

Certification

2 YEAR GUARANTEE

Guarantee	2 years

How to order

Order code	Description	Finish	Locks
95461600031	SF pull 25 x 400mm (bolt through)	SS	Scandinavian/DIN/UK
95461700031	SF pull 25 x 400mm (back-to-back)	SS	Scandinavian/DIN/UK
95452500031	SF pull 32 x 600mm (bolt through)	SS	Scandinavian/DIN/UK
95452600031	SF pull 32 x 600mm (back-to-back)	SS	Scandinavian/DIN/UK

Ruko-Line

This range includes round rose lever handles, pull handles, cylinder accessories, toilet accessories, doorstops and signage. The handles are manufactured from stainless steel grade 316 for exceptional corrosive resistance material and are designed to last a lifetime in areas where hygiene is a priority. The range is suitable for various sectors which have harsh environments such as public, healthcare and education. The Ruko-Line safety return handle meets BS 8300 which helps buildings become more accessible and inclusive.

The unsprung needle bearings reduce the friction of the rotating surface allowing ease of operation in use and offering a modern slim rose design where aesthetics are key. Our highly durable lever handles are suitable for our Scandinavian, DIN and UK Compact lock ranges.

Our door furniture sets are suitable for 32mm to 85mm thick doors and all levers in the range come with bolt through fixings to enhance the security and longevity of the most used and abused part of the doorset.

Range benefits

- Meets performance requirements under EN 1906 (grade 4)
- Meets commercial requirements under Equality Act: 2010
- Suitable for timber fire doors up to 60 minutes
- Suitable for metal fire doors up to 120 minutes
- Manufactured using grade 316 stainless steel to ensure durability and strength
- Suitable for a variety of applications or sectors such as public, commercial, hospitals, schools and universities

U19 lever handle

U-shape unsprung lever handle.

Features and benefits

- Suitable for areas where hygiene is a priority, and for external use in harsh or corrosive environments
- Ideal for use in all types of public buildings and healthcare environments internally and externally
- Slimline rose is particularly suited where aesthetics are a priority in the design brief
- Includes safety return feature as recommended by BS 8300
- Suitable to use with Scandinavian/DIN/UK compact lockcases

Classification code

4	7	-	1	0	4	0	U
(1-4)	(6/7)	-	(0/1)	(0/1)	(0-4)	(0-4)	(A/B/U)

EN 1906:2010

Certification

Certified in compliance with	EN 1906, EN 1634-1, EN 1670, BS 8300
Suitable for fire doors	Timber FD30/FD60, metal FD120
Guarantee	2 years

Specification

Handle type	Unsprung
Fixing	Concealed bolt through fixing as standard
Handing	Non-handed
Locks	Compatible with sprung lockcases
Door type	Timber, metal
Handle diameter / length / projection	19mm / 145mm / 70mm
Rose diameter / projection	53mm / 2mm
Door thickness	32 - 85mm
Material	Stainless steel (grade AISI 316L)
Finish	SS
Supplied with	1 spindle and M4 fixing screws
Accessories	See door furniture product accessories section for items such as escutcheons, blind roses, cylinder rings and thumb turns

Dimensions

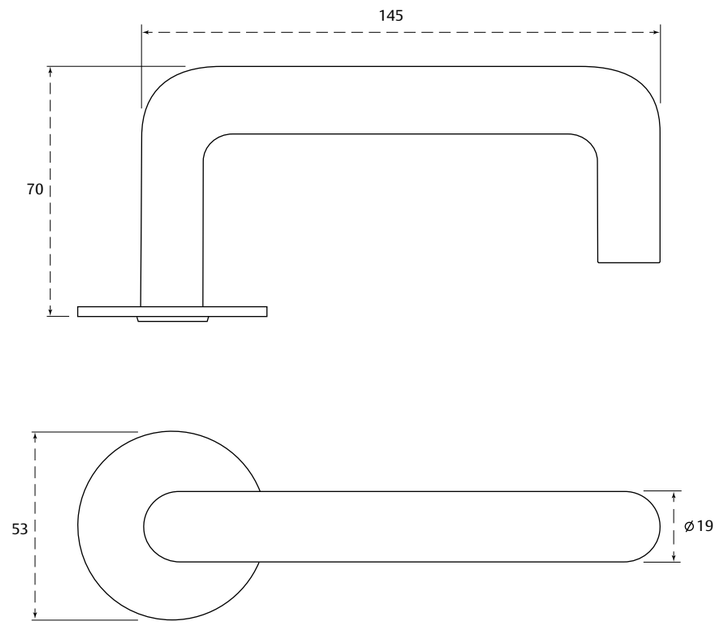

How to order

Order code	Description	Finish	Locks
95151200031	U19 unsprung lever handle	SS	UK/DIN
95151000031	U19 unsprung lever handle	SS	Scandinavian/UK compact

L19 lever handle

L-shape unsprung lever handle.

Features and benefits

- Suitable for areas where hygiene is a priority, and for external use in harsh or corrosive environments
- Ideal for use in all types of public buildings and healthcare environments internally and externally
- Slimline rose is particularly suited where aesthetics are a priority in the design brief
- Suitable to use with Scandinavian/DIN/UK compact lockcases

Classification code

4	7	-	1	0	4	0	U
(1-4)	(6/7)	-	(0/1)	(0/1)	(0-4)	(0-4)	(A/B/U)

EN 1906:2010

2 YEAR GUARANTEE

Certification

Certified in compliance with	EN 1906, EN 1634-1, EN 1670
Suitable for fire doors	Timber FD30/FD60, metal FD120
Guarantee	2 years

Specification

Handle type	Unsprung
Fixing	Concealed bolt through fixing as standard
Handing	Non-handed
Locks	Compatible with sprung lockcases
Door type	Timber, metal
Handle diameter / length / projection	19mm / 130mm / 71mm
Rose diameter / projection	53mm / 2mm
Door thickness	32 - 85mm
Material	Stainless steel (grade AISI 316L)
Finish	SS
Supplied with	1 spindle and M4 fixing screws
Accessories	See door furniture product accessories section for items such as escutcheons, blind roses, cylinder rings and thumb turns

Dimensions

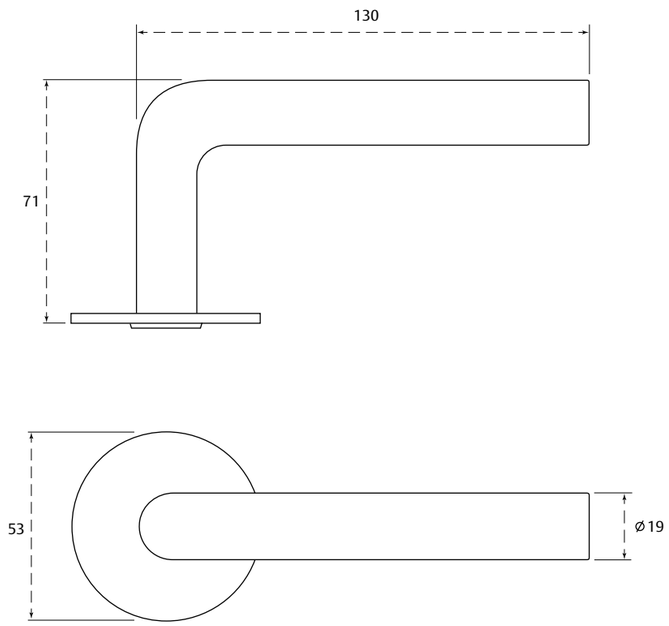

How to order

Order code	Description	Finish	Locks
95150900031	L19 unsprung lever handle	SS	UK/DIN
95150700031	L19 unsprung lever handle	SS	Scandinavian/UK compact

16mm pull handle

Straight back-to-back pull handle for use with Ruko-Line door furniture.

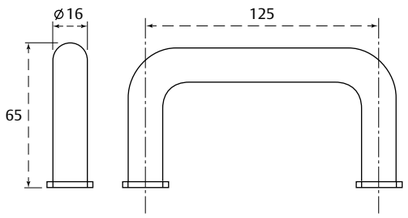

Features and benefits

- Manufactured from stainless steel grade 316
- Suitable for areas where hygiene is a priority, and for external use in harsh or corrosive environments
- Ideal for use in all types of public buildings and healthcare environments internally and externally

Specification

2 YEAR GUARANTEE

Fixing	Back-to-back fixing available
Door type	Timber, metal
Handle diameter / length	16mm / 125mm
Door thickness	10 - 70mm
Material	Stainless steel (grade AISI 316L)
Finish	SS
Supplied with	Timber and metal fixings
Glass doors	Mounting bolts and accessories available

Certification

Guarantee	2 years

How to order

Order code	Description	Finish	Locks
95170100031	Back-to-back fixing 16 x 125mm	SS	Scandinavian/DIN/UK

19mm pull handle

Straight bolt-through pull handle for use with Ruko-Line door furniture.

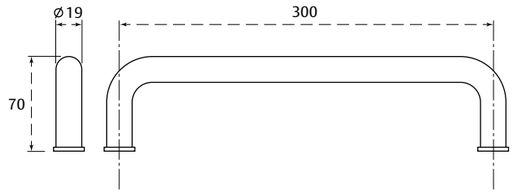

Features and benefits

- Manufactured from stainless steel grade 316
- Suitable for areas where hygiene is a priority, and for external use in harsh or corrosive environments
- Ideal for use in all types of public buildings and healthcare environments internally and externally

Specification

2 YEAR GUARANTEE

Fixing	Bolt through fixing
Handing	Non-handed
Door type	Timber, metal
Handle diameter / length	19mm / 300mm
Door thickness	10 - 70mm
Material	Stainless steel (grade AISI 316L)
Finish	SS
Supplied with	Timber and metal fixings
Glass doors	Mounting bolts and accessories available

Certification

Guarantee	2 years

How to order

Order code	Description	Finish	Locks
95170300031	Bolt through 19 x 300mm	SS	Scandinavian/DIN/UK

25mm pull handle

Straight pull handle for use with Ruko-Line door furniture.

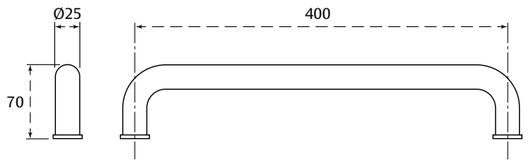

Features and benefits

- Manufactured from stainless steel grade 316
- Suitable for areas where hygiene is a priority, and for external use in harsh or corrosive environments
- Ideal for use in all types of public buildings and healthcare environments internally and externally

Specification

2 YEAR GUARANTEE

Fixing	Bolt through and back-to-back
Door type	Timber, metal
Handle diameter / length	25mm / 400mm
Door thickness	10 - 70mm
Material	Stainless steel (grade AISI 316L)
Finish	SS
Supplied with	Timber and metal fixings
Glass doors	Mounting bolts and accessories available

Certification

Guarantee	2 years

How to order

Order code	Description	Finish	Locks
95186500031	Bolt through (25 x 400mm)	SS	Scandinavian/DIN/UK
95186600031	Back-to-back (25 x 400mm)	SS	Scandinavian/DIN/UK

32mm pull handle

Straight pull handle for use with Ruko-Line door furniture.

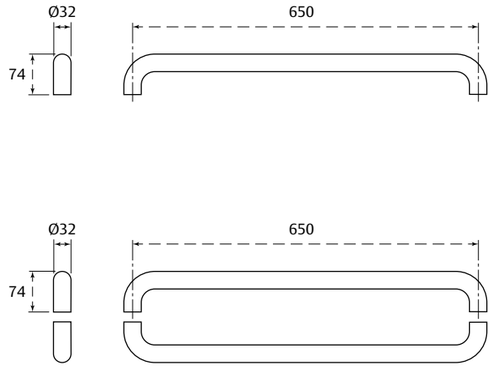

Features and benefits

- Manufactured from stainless steel grade 316
- Suitable for areas where hygiene is a priority, and for external use in harsh or corrosive environments
- Ideal for use in all types of public buildings and healthcare environments internally and externally

Specification

2 YEAR GUARANTEE

Fixing	Bolt through and back-to-back
Door type	Timber, metal
Handle diameter / length	32mm / 650mm
Door thickness	10 - 70mm
Material	Stainless steel (grade AISI 316L)
Finish	SS
Supplied with	Timber and metal fixings
Glass doors	Mounting bolts and accessories available

Certification

Guarantee	2 years

How to order

Order code	Description	Finish	Locks
95171300031	Bolt through (32 x 650mm)	SS	Scandinavian/DIN/UK
95171400031	Back-to-back (32 x 650mm)	SS	Scandinavian/DIN/UK

High security marine handles

Mainly designed for high security doors weighing over 150kg and tested to the marine grade standard of a salt spray test in excess of 480 hours. The handles are designed to last a lifetime in areas where security is a priority and for external use in harsh environments. The handles are tested and proven alongside blast and ballistic rated doors to ensure security and safety in areas that could be compromised.

Our handles are designed with anti-vibrations fixing and housings to remove any risk of becoming loose and maintaining secure furniture to the door. The marine grade safety return handle also meets BS 8300 which helps buildings become more accessible and inclusive.

Our door furniture sets are supplied as standard for 32-54mm thick doors. However, we also offer components so that products may be adapted to suit 54mm - 70mm thick doors. Both the cranked and straight versions of the handles are tested to EN 179 and EN 1906.

The handles have been developed to provide a perfect combination between strength, ergonomics and functionality. Characterised by a unique design and made from high quality materials, they can be used for both surface and mortice mounted locks.

Range benefits

- Suitable for heavy duty usage
- Suitable for timber fire doors up to 60 minutes
- Suitable for metal fire doors up to 240 minutes
- Manufactured using grade 316 stainless steel to ensure durability and strength
- Suitable for a variety of applications for commercial buildings

ASSA ABLOY
Opening Solutions

Straight marine handle

High security straight handle for use on surface and mortice mounted locks.

Features and benefits

- Manufactured from stainless steel grade 316
- Meets BS 8300 requirements
- Suitable for heavy duty usage
- Recommended for standard door leafs and doors in excess of 250kg
- For surface and mortice mounted locks
- Tested alongside blast and ballistic rated doors
- Category of use grade 4
- Compatible with UK/DIN/Scandinavian lockcases

Classification code

4	7	-	1	1	5	0	B
(1-4)	(6/7)	-	(0/1)	(0/1)	(0-4)	(0-4)	(A/B/U)

EN 1906:2010

1 YEAR GUARANTEE

Specification

Handle type	Sprung
Fixing	Bolt through (concealed fixings)
Handing	Supplied as a set
Locks	Compatible with unsprung locks
Door type	Timber, metal
Handle diameter / length / projection	19mm / 162mm / 82mm
Rose diameter / projection	55.5mm / 26.7mm
Door thickness	32 – 54 and 54 – 70mm
Material	Stainless steel (grade 316)
Finish	SS
Supplied with	Supplied with 2 spindles- fixing pack

Dimensions

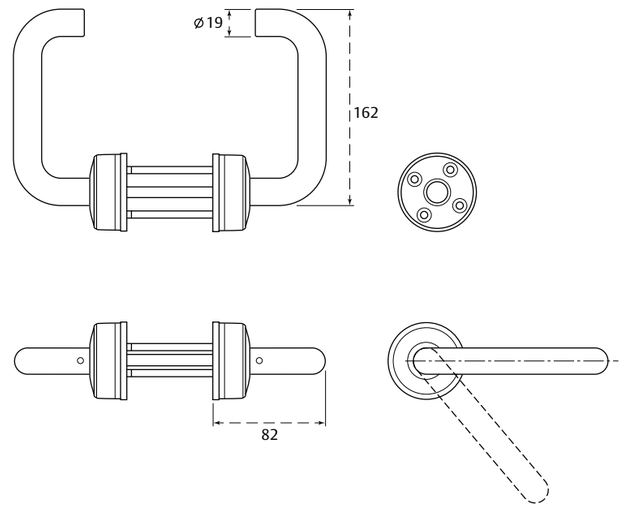

Certification

Certified in compliance with	EN 1906, EN 1634-1, EN 1670, BS 8300
Suitable for fire doors	Timber FD60, metal FD240
Guarantee	1 year

How to order

Order code	Description	Finish	Locks
ASLHS416226E-SS	Straight handle	SS	DIN/UK
ASLHS416226S-SS	Straight handle	SS	Scandinavian

ASSA ABLOY
Opening Solutions

Cranked marine handle

High security cranked handle for use on both surface and mortice mounted locks.

Features and benefits

- Manufactured from stainless steel grade 316
- Meets BS 8300 requirements
- Easy grip and functionality during the usage
- Cranked handle finishes at 90 degrees for accessibility
- Recommended for standard door leafs and doors in excess of 250kg
- For surface and mortice mounted locks
- Tested alongside blast and ballistic rated doors
- Category of use grade 4
- Compatible with UK/DIN/Scandinavian

Classification code

4	7	-	1	1	5	0	B
(1-4)	(6/7)	-	(0/1)	(0/1)	(0-4)	(0-4)	(A/B/U)

EN 1906:2010

1 YEAR GUARANTEE

Certification

Certified in compliance with	EN 1906, EN 1634-1, EN 1670, BS 8300
Suitable for fire doors	Timber FD60, metal FD240
Guarantee	1 year

Specification

Handle type	Sprung
Fixing	Bolt through (concealed fixings)
Handing	Non-handed
Locks	Compatible unsprung locks
Door type	Timber, metal
Handle diameter / length / projection	19mm / 158.7mm / 82mm
Rose diameter / projection	56.5mm / 26.7mm
Material	Stainless steel (grade 316)
Finish	SS
Supplied with	Supplied with 2 spindles- fixing pack

Dimensions

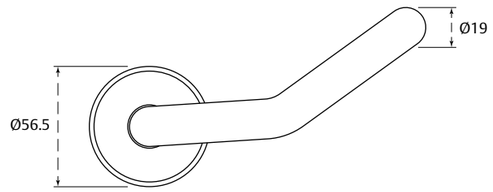

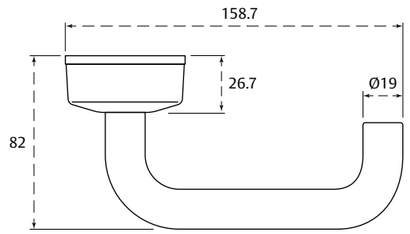

Cranked handle
(8mm handle follower)

How to order

Order code	Description	Finish	Locks
ASLHC415826E-SS	Cranked handle	SS	DIN/UK
ASLHC415826S-SS	Cranked handle	SS	Scandinavian

Commercial flush bolts

Flush bolts are morticed into the door to provide a flush finish; most commonly used at the meeting point of a pair of rebated doors. When doors are closed, the flush bolts are concealed and therefore secure. The length of a bolt is determined by the height of the door. Lever action flush bolts provide a good security feature that can allow the secondary/inactive leaf to be opened but will also hold the door leaf in the closed position to allow accessibility or larger equipment to be moved around.

Flush bolts are most commonly used on the secondary/inactive leaf of the door with the sprung internal system designed to minimise the cut out of the door. They can be locked or unlocked easily by flipping the lever action that flicks the bolt up and down and are suitable for use on swing or sliding doors.

Our range of flush bolts are easy to install and manufactured from durable materials meaning they stand the test of time - available with radius corners for simple door preparation and improved styling.

Range benefits

- Flush installation - discreet, clean and neat for aesthetics
- Operate lever flush when closed
- Standard installation requires two flush bolts, morticed into the top and bottom of the door for added security and to prevent the door from warping
- Suitable for 30 and 60 minute timber fire doors

ASSA ABLOY
Opening Solutions

8060 stainless steel flush bolt

Stainless steel flush bolt used for securing the passive leaf of a pair of doors.

Features and benefits

- Sprung lever action that flicks the bolt up and down
- Flush installation - discreet, clean and neat
- Radius corners for simple door preparation and improved aesthetics
- Achieved 10,000 cycles when tested for durability
- Available with 2mm intumescent strip for 30 and 60 minute fire doors
- Achieved a corrosion resistance of 96 hours

5 YEAR GUARANTEE

Certification

Certified in compliance with	EN 1670, EN 1634-1
Suitable for fire doors	Timber FD30/ FD60
Guarantee	5 years

Specification

Dimension	150mm, 200mm, 300mm
Depth	22.5mm
Case	Aluminium alloy
Bolt	Steel
Bolt projection	15mm
Rod	Steel
Finish	SS
Brackets	Not supplied
Supplied with	Fixings for timber doors and flat locking plate

Dimensions

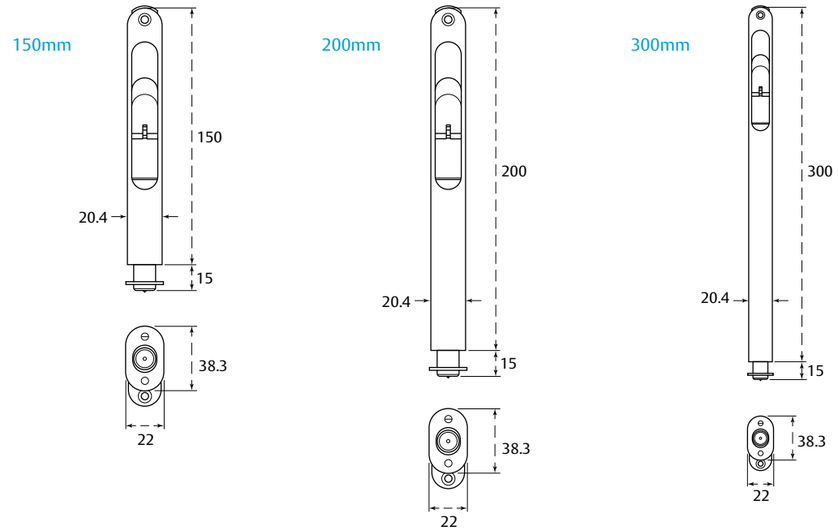

How to order

Standard non fire rated

Order code	Description	Finish	Locks
J8060-150-SS	Flush bolt satin stainless 150mm	SS	N/A
J8060-200-SS	Flush bolt satin stainless 200mm	SS	N/A
J8060-200-SS	Flush bolt satin stainless 300mm	SS	N/A

Fire rated

Order code	Description	Finish	Locks
AA8060-FB-150-SS	Flush bolt satin stainless 150mm - fire rated with intumescent strip	SS	N/A
AA8060-FB-200-SS	Flush bolt satin stainless 200mm - fire rated with intumescent strip	SS	N/A
AA8060-FB-300-SS	Flush bolt satin stainless 300mm - fire rated with intumescent strip	SS	N/A
AA-2FB-150/200-INT	Flush bolt intumescent kit 150/200 self-adhesive	N/A	N/A
AA-2FB-300/450-INT	Flush bolt intumescent kit 300/450 self-adhesive	N/A	N/A

ASSA ABLOY
Opening Solutions

6201-01 flush bolt

6201 flush bolt used for securing the passive leaf of a pair of doors.

Features and benefits

- Suitable for use on aluminum doors
- Available in flat or radius
- Operating lever hidden when door is closed
- Hardened steel bolt, zinc plated with anti-rattle sleeve
- Standard installation requires two flush bolts, morticed into the top and bottom of the door

3 YEAR GUARANTEE

Certification

Certified in compliance with	No
Suitable for fire doors	No
Guarantee	3 years

Specification

Dimension (H x W x D)	305 x 23 x 24.8mm
Case	Die cast zinc alloy body mechanism
Bolt	Hardened steel bolt, zinc plated, anti-rattle sleeve
Bolt throw	18mm
Rod	7mm zinc plated steel, 40mm thread length
Finish	SC
Brackets	Not supplied
Supplied with	Aluminum door fixings

Dimensions

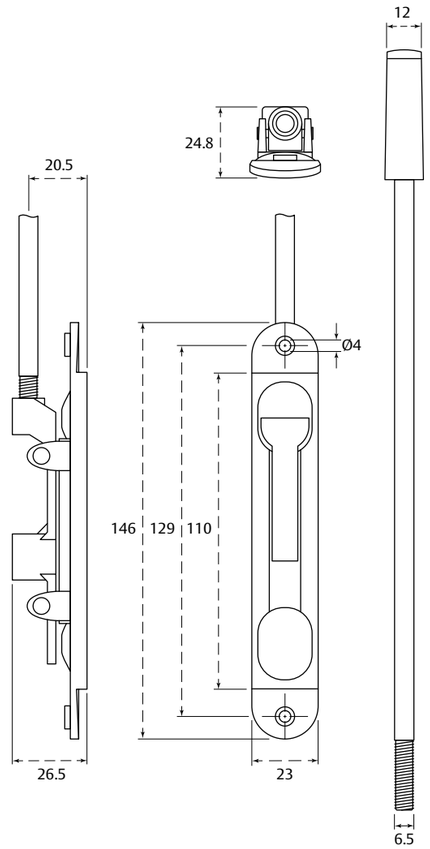

How to order

Standard non fire rated

Order code	Description	Finish	Locks
6201-01	6201 flush bolt guide	SC	N/A
6201-6-12	6201 flush bolt flat, SAA 12 ROD	SC	N/A
6201-7-12	6201 flush bolt radius, SAA 12 ROD	SC	N/A
6201-R20	20" ROD to suit 6201 flush bolt	SC	N/A

Door accessories

Types of accessories you will find included:

- Door stops
- Coat hooks
- Kick plates
- Push finger plates
- Signage

J1000 range accessories

Dome floor mounted door stop

Screw-in design round door stop

Specification

Material	Stainless steel (grade 304)
Finish	SS with black rubber buffer
Height	44mm
Diameter	25mm
Supplied with	Fixings
Fixing method	Screw-in design
Guarantee	5 years

How to order

Order code	Description	Finish
J-DS100SS	Door stop (floor/round)	SS

Round floor mounted door stop

Screw-in design door stop

Specification

Material	Stainless steel (grade 304)
Finish	SS with black rubber buffer
Height	40mm
Diameter	30mm
Supplied with	Timber fixings
Fixing method	Screw-in design

How to order

Order code	Description	Finish
J-DS101SS	Door stop (floor mounted)	SS

Wall mounted door stop

Screw-in design wall mounted door stop

Specification

Material	Stainless steel (grade 304)
Finish	SS with black rubber buffer
Height	90mm
Diameter	19mm
Supplied with	Timber fixings
Fixing method	Screw-in design

How to order

Order code	Description	Finish
J-DS102SS	Door stop (floor mounted)	SS

Kick plate

Stainless steel kick plate with pre-drilled countersunk screw holes

Specification

Material	Stainless steel (grade 304)
Finish	SS
Width	930mm
Height	150mm
Thickness	1.2mm
Supplied with	Fixings
Fixing method	Screw-in design
Additional specification	Additional sizes available upon request
Guarantee	2 years

How to order

Order code	Description	Finish
AA-KP-930x150-SS	Kick plates	SS

Push finger plate

Thin stainless steel push plate with pre-drilled countersunk screw holes

Specification

Material	Stainless steel (grade 304)
Finish	SS
Width	100mm
Height	150, 225, 300, 425 and 500mm
Thickness	1.2mm
Supplied with	Fixings
Fixing method	Screw-in design
Guarantee	2 years

How to order

Order code	Description	Finish
AA-PP-150-SS	150mm push plate	SS
AA-PP-225-SS	225mm push plate	SS
AA-PP300-SS	300mm push plate	SS
AA-PP-425-SS	425mm push plate	SS
AA-PP-500-SS	500mm push plate	SS

Hat and coat hook

Wall mounted screw-in design hat and coat hook

Specification

Material	Stainless steel (grade 304)
Finish	SS with black rubber buffer
Diameter	85mm
Projection	60mm
Supplied with	Fixings
Fixing method	Screw-in design
Guarantee	5 years

How to order

Order code	Description	Finish
J-HC100SS	Hat and coat hook	SS

Signage

Stainless steel signage drilled and self-adhesive

Specification

Material	Stainless steel
Finish	SS
Diameter	76mm
Thickness	1.5mm
Supplied with	Fixings
Fixing method	Screw-in or self-adhesive
Guarantee	2 years

How to order

Order code	Description	Finish
AA-BABCHG-SADH-SS	Baby change sign – self adhesive	SS
AA-BABCHG-DRL-SS	Baby change sign – drilled	SS
AA-UNISEX-SADH-SS	Unisex symbol sign – self adhesive	SS
AA-UNISEX-DRL-SS	Unisex symbol sign – drilled	SS
AA-FEM-DRL-SS	Female symbol sign – drilled	SS
AA-FEM-SADH-SS	Female symbol sign – self adhesive	SS
AA-MALE-DRL-SS	Male symbol sign – drilled	SS
AA-MALE-SADH-SS	Male symbol sign – self adhesive	SS
AA-DISBLD-DRL-SS	Disabled symbol sign – drilled	SS
AA-DISBLD-SADH-SS	Disabled symbol sign – self adhesive	SS
AA-SHWR-DRL-SS	Shower symbol sign – drilled	SS
AA-SHWR-SADH-SS	Shower symbol sign – self adhesive	SS
AA-FDKS-DRL-SS	Fire door keep shut sign – drilled	SS
AA-FDKS-SADH-SS	Fire door keep shut sign – self adhesive	SS
AA-FDKL-DRL-SS	Fire door keep locked sign – drilled	SS
AA-FDKL-SADH-SS	Fire door keep locked sign – self adhesive	SS
AA-AFDKC-DRL-SS	Automatic fire door keep closed sign – drilled	SS
AA-AFDKC-SADH-SS	Automatic fire door keep closed sign – self adhesive	SS

ScanFlex accessories

ScanFlex collared floor door stop

Grade 304 stainless steel collared door stop to protect walls and skirting boards

Specification

Material	Stainless steel (grade 304)
Finish	Stainless steel with black rubber buffer
Height	55mm
Diameter	32mm
Supplied with	Fixings
Fixing method	Screw-in design
Guarantee	2 years

How to order

Order code	Description	Finish
95450700031	SF floor door stop 32 x 55mm	SS

ScanFlex oval floor door stop

Grade 304 stainless steel oval floor door stop to protect walls and skirting boards

Specification

Material	Stainless steel (grade 304)
Finish	Stainless steel with black rubber buffer
Height	45mm
Diameter	25mm
Supplied with	Fixings
Fixing method	Screw-in design
Guarantee	2 years

How to order

Order code	Description	Finish
95450600031	SF floor door stop 45 x 25mm	SS

ScanFlex projecting wall 55m door stop

Grade 304 stainless steel projecting wall door stop to protect walls and skirting boards

Specification

Material	Stainless steel (grade 304)
Finish	SS with black rubber buffer
Height	55mm, 75mm
Diameter	5mm
Supplied with	Fixings
Fixing method	Screw-in design
Guarantee	2 years

How to order

Order code	Description	Finish
95450800031	SF wall door stop 5 x 55mm	SS
95454500031	SF wall door stop 5 x 75mm	SS

ScanFlex coat hook

Grade 304 stainless steel coat hook, to hang up clothes and bags and keep hallways tidy

Specification

Material	Stainless steel (grade 304)
Finish	SS
Diameter	19mm
Projection	80mm
Supplied with	Fixings
Thickness	19mm
Fixing method	Screw-in design
Guarantee	2 years

How to order

Order code	Description	Finish
95451700031	SF coat hook	SS

Product accessories

Types of accessories you will find included:

- Escutcheons
- Door pulls
- Thumb turns
- Blind roses
- Cylinder rings
- Cover caps

ASSA ABLOY
Opening Solutions

Commercial lever range accessories

J1000 range

- Diameter 54mm x 8mm
- Suitable for 30min and 60min fire doors
- Supplied with timber fixings to suit 44mm-54mm doors
- 5 year guarantee

Product code	Description	Compatible with	Finish	Image
J-1000EESS	Euro escutcheon EN 1634-1:2000	J1000 range	SS	
J-1000LKSS	Lever key escutcheon EN 1634-1:2000			
J-1000OESS	Oval profile escutcheon EN 1634-1:2000			
J-1000BRSS	Blind rose EN 1634-1:2000			
J-1000CPESS	Euro profile rim cylinder door pull • H94mm x W50mm x L28mm • Screw in fixings EN 1634-1:2000			
J-1000ERSS	Emergency release			
J-1000TSS	Standard thumb turn			
J-1000LTSS	Large turn bar			

Classic range accessories

Thumb turn sets

- Diameter 52-55mm
- Supplied with spindle, screws and external cylinder ring
- Cylinder ring external, thumb turn internal
- Available with extended grip for use by less able bodied traffic
- EN 1634-1:2000
- 2 year guarantee
- Solid brass

Product code	Description	Compatible with	Finish	Image
45020217213	256 accessory set 11mm (cylinder ring + thumb turn)	Classic range	SC	
45020217220	256 accessory set 11mm (cylinder ring + thumb turn)		PB	
46266417213	256 accessory set 13mm (cylinder ring + thumb turn) (Scandinavian)		SC	
46266417220	256 accessory set 13mm (cylinder ring + thumb turn) (Scandinavian)		PB	
80603417213	256 accessory set 16mm (cylinder ring + thumb turn) (Scandinavian)		SC	
80603417220	256 accessory set 16mm (cylinder ring + thumb turn) (Scandinavian)		PB	
80519417213	256 accessory set 18mm (cylinder ring + thumb turn) (Scandinavian)		SC	
80519417220	256 accessory set 18mm (cylinder ring + thumb turn) (Scandinavian)		PB	

ASSA ABLOY
Opening Solutions

Cylinder rings

- Accessory sets to use with Modular locks and Scandinavian lockcases
- Diameter 53mm
- Solid brass material
- Supplied with screws and fixings
- Can be supplied with internal and external blind rose
- For external use in harsh or corrosive environments
- EN 1634-1:2000
- FD30 and FD60 rating on timber doors
- FD120 rating on metal doors
- 2 year guarantee

18256 – cylinder ring external, cylinder ring internal

Product code	Description	Compatible with	Finish	Image
80462717213	18256 accessory set 11mm (2 x cylinder ring)	Classic range	SC	
80462717220	18256 accessory set 11mm (2 x cylinder ring)		PB	
80462917213	18256 accessory set 13mm (2 x cylinder ring)		SC	
80462917220	18256 accessory set 13mm (2 x cylinder ring)		PB	
80463117213	18256 accessory set 16mm (2 x cylinder ring)		SC	
80463117220	18256 accessory set 16mm (2 x cylinder ring)		PB	
80463417213	18256 accessory set 18mm (2 x cylinder ring)		SC	
80463417220	18256 accessory set 18mm (2 x cylinder ring)		PB	

18256 – cylinder ring external, cylinder ring internal

Product code	Description	Compatible with	Finish	Image
80669617213	2356 accessory set 11mm (cylinder ring + rose)	Classic range	SC	
80669617220	2356 accessory set 11mm (cylinder ring + rose)		PB	
80647817213	2356 accessory set 13mm (cylinder ring + rose)		SC	
80647817220	2356 accessory set 13mm (cylinder ring + rose)		PB	
80647917213	2356 accessory set 16mm (cylinder ring + rose)		SC	
80647917220	2356 accessory set 16mm (cylinder ring + rose)		PB	
80648017213	2356 accessory set 18mm (cylinder ring + rose)		SC	
80648017220	2356 accessory set 18mm (cylinder ring + rose)		PB	

2356 – cylinder ring external, blind rose internal

Product code	Description	Compatible with	Finish	Image
80669617213	2356 accessory set 11mm (cylinder ring + rose)	Classic range	SC	
80669617220	2356 accessory set 11mm (cylinder ring + rose)		PB	
80647817213	2356 accessory set 13mm (cylinder ring + rose)		SC	
80647817220	2356 accessory set 13mm (cylinder ring + rose)		PB	
80647917213	2356 accessory set 16mm (cylinder ring + rose)		SC	
80647917220	2356 accessory set 16mm (cylinder ring + rose)		PB	
80648017213	2356 accessory set 18mm (cylinder ring + rose)		SC	
80648017220	2356 accessory set 18mm (cylinder ring + rose)		PB	

2256 – blind rose external, cylinder ring internal

Product code	Description	Compatible with	Finish	Image
80669517213	11mm cylinder ring accessory set (Scandinavian)	Classic range	SC	
80647517213	13mm cylinder ring accessory set (Scandinavian)			
80647617213	16mm cylinder ring accessory set (Scandinavian)			
80647717213	18mm cylinder ring accessory set (Scandinavian)			

265 toilet accessory set

- 52mm diameter x 26mm projection
- 30mm screw centre distance
- Supplied with roses, thumb turn, red/white indicator and all fixings
- Indicator rose outside, thumb turn inside
- For use with Scandinavian bathroom locks
- Solid brass
- 2 year guarantee

Product code	Description	Compatible with	Finish	Image
46883210013	265 Toilet accessory set (Modular/Connect lock) (Scandinavian) • Available with extended grip for use by the less able bodied traffic	Classic range	SC	
46883210020	265 Toilet accessory set (Modular/Connect lock) (Scandinavian)		PB	
80301410013	9265 disabled toilet accessory set (Modular/Connect range) (Scandinavian)		SC	
41240510013	263 DIN/UK toilet accessory set		SC	

Distinction range accessories

Cover caps

- 53.3mm diameter x 8mm projection
- Provides aesthetic finish
- Reduces opportunity of tampering with the fixings
- Pressed brass with plastic washer
- Cover cap for concealed screw attachment. Fits with ASSA lever 640, 696 and 6655

Product code	Description	Compatible with	Finish	Image
36346000013	Cover cap and silver ring/washer EN 1634-1:2000	Distinction range	SC	

Scanflex range accessories

Grade 304 stainless steel makes accessories ideal for corrosive environments.

Thumb turns

- 53mm diameter x 2mm projection
- Supplied with screws and fixings
- Cylinder ring external, thumb turn internal
- Also available with extended grip for use by those less able bodied
- Suitable for Scandinavian lockcases
- FD30 and FD60 rating on timber doors
- FD120 rating on metal doors
- 2 year guarantee

Product code	Description	Compatible with	Finish	Image
95403100034	11mm thumb turn accessory set	ScanFlex range	SS	
95403000034	13mm thumb turn accessory set			
95402900034	16mm thumb turn accessory set			
95402800034	18mm thumb turn accessory set			

Cylinder rings

- 53mm diameter
- Supplied with screws and fixings
- Can be supplied with internal and external blind rose
- Suitable for Scandinavian lockcases
- FD30 and FD60 rating on timber doors
- FD120 rating on metal doors
- 2 year guarantee

18256SF – cylinder ring external, blind rose internal

Product code	Description	Compatible with	Finish	Image
93332100034	11mm cylinder ring accessory set	ScanFlex range	SS	
93332000034	13mm cylinder ring accessory set			
93331800034	16mm cylinder ring accessory set			
93331700034	18mm cylinder ring accessory set			

ASSA ABLOY
Opening Solutions

2356SF – cylinder ring external, blind rose internal

Product code	Description	Compatible with	Finish	Image
95403900034	11mm cylinder ring accessory set	ScanFlex range	SS	
95403800034	13mm cylinder ring accessory set			
95403700034	16mm cylinder ring accessory set			
95403600034	18mm cylinder ring accessory set			

2256SF – blind rose external, cylinder ring internal

Product code	Description	Compatible with	Finish	Image
95410700034	11mm cylinder ring accessory set	ScanFlex range	SS	
95410600034	13mm cylinder ring accessory set			
95410500034	16mm cylinder ring accessory set			

Euro escutcheon

Product code	Description	Compatible with	Finish	Image
95451900031	320SF Euro escutcheon complete set (1 pair) to suit DIN locks	ScanFlex range	SS	

Blind roses

Product code	Description	Compatible with	Finish	Image
95454600031	994SF M4 blind rose (external and internal) - handles	ScanFlex range	SS	
95404400031	995SF M5 blind rose (external and internal) - cylinder			

Toilet set

Product code	Description	Compatible with	Finish	Image
95404700031	265SF toilet accessory set Modular/Connect locks (Scandinavian)	ScanFlex range	SS	
95458600031	262SF toilet accessory set (DIN locks)			
95412200031	9265SF disabled toilet accessory set Modular/Connect locks (Scandinavian)			

Ruko-Line accessories

Grade 316 stainless steel makes accessories ideal for corrossive environments.

- Pair of cylinder escutcheons for Euro profile cylinders
- 54mm diameter x 2mm projection
- 38mm fixing centre
- Grade 316 SS
- Supplied with M4 screws
- Bolt through fixing method
- 2 year guarantee

Product code	Description	Compatible with	Finish	Image
95153700031	220RL Euro escutcheon set (M5 bolt-through)	Ruko-Line range	SS	
95153800031	320RL Euro escutcheon set (M5 woodscrew)			

Blind roses

- Pair of blind roses for use with DIN and Scandinavian locks or Euro profile cylinders
- 53mm diameter x 2mm projection
- 30mm fixing centre distance for Connect/Modular range
- 38mm fixing centre distance for Euro profile cylinders
- Grade 316 SS
- Supplied with fixings screws and cover caps
- Bolt through fixing method
- 2 year guarantee

Product code	Description	Compatible with	Finish	Image
95152800031	994RL M4 blind rose (external and internal) handles (Scandinavian)	Ruko-Line range	SS	
95153100031	995RL M5 blind rose (external and internal) Scandinavian cylinder (Scandinavian)			
95189100031	996RL M4 blind rose (external and internal) handle and cylinder (DIN)			

Toilet set

- Accessory set for use with DIN and Scandinavian lockcases
- 53mm diameter x 2mm projection
- Fixing centre distance 30mm for Scandinavian
- Fixing centre distance 38mm for DIN profile cylinders
- Grade 316 SS
- Supplied with roses, thumb turn, red/white indicator and all fixings
- Indicator rose outside, thumb turn inside
- Also available with extended grip for use by those less able bodied
- 2 year guarantee

Product code	Description	Compatible with	Finish	Image
95154200031	265RL toilet accessory set (Scandinavian)	Ruko-Line range	SS	
95154400031	262RL toilet accessory set (DIN)			
95154500031	9265RL disabled toilet accessories for Modular and Connect (Scandinavian)			
95154700031	9262RL disabled toilet accessories for Modular and Connect (DIN)			

Thumb turns

- 256 thumb turn accessory set for use with Scandinavian lockcases
- Grade 316 SS
- 53mm diameter x 2mm projection
- Supplied with screws and fixings
- Cylinder ring external, thumb turn internal
- Compatible with Scandinavian lockcases
- Also available with extended grip for use by the less able bodied traffic
- FD30 and FD60 rating on timber doors
- 2 year guarantee

Product code	Description	Compatible with	Finish	Image
95140200031	11mm thumb turn accessory set	Ruko-Line range	SS	
95140300031	13mm thumb turn accessory set			
95140400031	16mm thumb turn accessory set			
95140500031	18mm thumb turn accessory set			

Accessory sets for Scandinavian locksets

Cylinder rings

- Cylinder accessory sets for use with the Modular range locks
- 53mm diameter
- Supplied with screws and fixings
- Cylinder ring outside, cylinder ring inside
- Can be supplied with internal and external blind rose
- Compatible with Scandinavian lockcases
- FD30 and FD60 rating on timber doors
- FD120 rating on metal doors
- 2 year guarantee

18256RL – cylinder ring external, cylinder ring internal

Product code	Description	Compatible with	Finish	Image
95143200031	11mm cylinder ring accessory set	Ruko-Line range	SS	
95143300031	13mm cylinder ring accessory set			
95143400031	16mm cylinder ring accessory set			
95143500031	18mm cylinder ring accessory set			

2356RL – cylinder ring external, blind rose internal

Product code	Description	Compatible with	Finish	Image
95141800031	11mm cylinder ring accessory set	Ruko-Line range	SS	
95141900031	13mm cylinder ring accessory set			
95142000031	16mm cylinder ring accessory set			
95142100031	18mm cylinder ring accessory set			

2256RL – blind rose external, cylinder ring internal

Product code	Description	Compatible with	Finish	Image
80669517213	11mm blind rose accessory set	Ruko-Line range	SS	
80647517213	13mm blind rose accessory set			
80647617213	16mm blind rose accessory set			
80647717213	18mm blind rose accessory set			

Euro escutcheons

- Pair of cylinder escutcheons for Euro profile cylinders
- Grade 316 stainless steel
- Supplied with M5 screws
- 38mm fixing centre
- Bolt through fixings
- 2 year guarantee

Product code	Description	Compatible with	Finish	Image
95153700031	53mm x 2mm 220RL Euro escutcheon set (M5 bolt-through)	Ruko-Line range	SS	
95153800031	53mm x 2mm 320RL Euro escutcheon set (M5 woodscrew)			

Blind roses

- Pair of blind roses for use with DIN and Scandinavian locks or Euro profile cylinders
- Grade 316 stainless steel
- 53mm diameter x 2mm projection
- Supplied with M4 screws – 30mm fixing centres, M5 screws – 30mm fixing centres, M5 screws
- Bolt through fixing
- 30mm fixing centre distance for Scandinavian and Connect/Modular range, 38mm fixing centre UK or DIN style lockcases
- 2 year guarantee

Product code	Description	Compatible with	Finish	Image
95152800031	994RL M4 blind rose (external and internal) Scandinavian handles	Ruko-Line range	SS	
95153100031	995RL M5 blind rose (external and internal) Scandinavian cylinder			
95189100031	996RL M4 blind rose (external and internal) DIN handle and cylinder			

Standards and legislation

Standards and legislation

There are many standards that apply to and affect door hardware. This is due to the important role door hardware plays in ensuring safety, security and accessibility within a building and for its users. Some standards give a general purpose overview of the hardware while others can focus on suitability for certain applications such as fire doors or security needs. Compliance can be conveyed by product or packaging markings such as a Kitemark, UKCA, CE or Certifire logo while others are simply by a test report and resulting classification. Some of these standards are required by law whereas others are advisory or indicate specific properties of a product.

During 2022, British legislation on safety marks is changing to accommodate Brexit. CE marking is being replaced by UKCA marking for goods sold in England, Scotland and Wales. Goods sold in Northern Ireland and exported to EU27 countries such as Republic of Ireland continue to use CE mark. By 1st January 2023, CE marked hardware will be carrying dual accreditation allowing products to serve both markets.

Most standards relate to individual items of hardware although a handful look at full doorset solutions and/or building use. Within each section of this specification manual we have provided details of certification that relates solely or primarily to that specific product type.

This is an overview of some of the broader standards that that apply to or affect door hardware.

Key principle	Standards and legislation	Compliance basis
Accessibility	BS 8300-2:2018	Guidance
	Approved Document M	Legal
Safety	CE Mark	Legal
	UKCA	Legal
Fire safety	Approved Document B	Legal
	EN 1634	Legal
	Certifire	Voluntary
Security	Approved Document Q	Legal
	Kitemark	Voluntary
	Secured by Design	Voluntary
	Loss Prevention Standard 1175	Voluntary
Environmental	Environmental Product Declaration	Guidance

Please contact us if you require further information on how our products meet and support these standards.

As our UK offices are based in England, we have referenced English building regulations but acknowledge that requirements in other parts of UK and the rest of the world can vary so we recommend that you check your local building regulations for relevant requirements.

The following information is correct at time of writing, but accreditation schemes can change so please use the following summaries as an overview only and refer to us or the accreditation agency for the latest requirements or more detailed information.

BS 8300-2:2018 – design of an accessible and inclusive built environment

BS 8300 is an advisory 'Best Practice' standard (under Approved Document M) which considers the universal accessibility of buildings and provides guidance on how to meet the needs of the less able. It offers guidance on overall building design as well as individual hardware considerations such as optimal handle shape and lock installation height for ideal easy use. The greater the deviation from that ideal, the less user friendly for all the solution becomes.

An accessible environment is one where a less able person requires the ability to enter and make use of doors independently. This includes being able to escape a building in the event of a fire or other emergency.

Approved Document M (ADM)

Approved Document M of the UK Building Regulations is a mandatory standard which takes into account the purpose of a building and the ease of access in and out of the building environment. There are two volumes in this Standard with part 1 relating to dwellings and part 2 for other buildings, with part 2 making the most recommendations on door hardware.

CE

CE mark

This is a legal requirement in certain applications. In hardware there are two distinct reasons to CE mark goods:

1) To demonstrate compliance with Construction Products Regulations (CPR) relating to safety requirements, especially around fire doors.

2) To demonstrate compliance with Electromagnetic Compatibility Directive (EMC), which confirms that use of tested product will not cause disruption to other electromagnetic products in the vicinity.

CPR CE marking typically requires initial and annual mechanical testing as per the relevant harmonised EN hardware standard, one-off fire evidence to EN 1634 and annual factory audits with certification issued by an independent notified body.

CE marking under CPR rules require the CE logo to be accompanied by a 4-digit notified body number and for the CE logo to displayed on product and/or packaging. There is also a requirement for manufacturers to make available a Declaration of Performance (DoP), typically via their website.

CPR CE markable products

Please note that not all hardware on fire doors can be UKCA/CE marked

Product type	Harmonised EN	Fire doors	Non-fire doors
Mechanical locks and latches	EN 12209	Yes	No
Hinges	EN 1935	Yes	No
Mechanical door closers	EN 1154	Yes	Yes
Electromechanical hold open devices	EN 1155	Yes	No
Door co-ordinators	EN 1158	Yes	No
Panic devices	EN 1125	Yes	Yes
Emergency devices	EN 179	Yes	Yes
Outside access devices	n/a	No	No
Cylinders	n/a	No	No
Handles	n/a	No	No

(See relevant manual section for more information on each EN Standard, including non-harmonised standards such as EN 1303 for cylinders)

EMC CE marking is typically a self-declaration following a one-off test on electromagnetic discharge and interference. In this application, the CE logo on product or packaging stands on its own (as no notified body is involved in the accreditation) and Declaration of Conformance (DoCs) are available on request.

UK
CA

UKCA mark

This will be a legal requirement for products sold in England, Scotland and Wales replacing CE marking from 1st January 2023. Given their similarities, the reasons to UKCA mark goods is the same as CE marking:

1) To demonstrate compliance with either Construction Products Regulations (CPR) relating to safety requirements, especially around fire doors.

2) To demonstrate compliance with Electromagnetic Compatibility Directive (EMC), which confirms that use of tested product will not cause disruption to other electromagnetic products in the vicinity.

UKCA is being introduced following Brexit and resulting changes to UK law as the British equivalent of CE marking, meaning there is no difference in the performance expectations or method of gaining and displaying the new accreditation. For more information on UKCA scheme requirements, please refer to CE mark section above.

UKCA mark can only be issued by a UK Approved Body so will have unique certificates, product markings and Declaration of Performance or Declaration of Conformance, separate to those to relating to CE mark. The underlying evidence reports may well be common to both schemes.

The new marking will sit alongside the CE mark so stock can be sold into Northern Ireland and exported to EU27 countries. The deadline for having UKCA in place is 1st January 2023.

Goods already in the market by 1st January 2023 with CE mark only, can continue to be sold through and installed beyond this deadline.

Approved Document B (ADB)

Approved Document B of the UK Building Regulations is a mandatory standard which considers fire safety in dwellings. Like Approved Document M, ADB is split into two parts with Volume 1 relating to dwelling needs and Volume 2 governing other building needs for fire safety. Both documents specify hardware requirements on escape route doors and fire doors as well as making reference to Regulation 38.

Regulation 38

Regulation 38 of ADB relates to the sharing of fire safety information. It requires the builder/installer to cascade all information relating to building design and construction, including the fittings, to assist the responsible person in operating and maintaining the building safely across its entire lifecycle. This is required to happen no later than the date of completion or date of occupation, whichever is earliest. The 'Responsible Person', is defined within The Regulatory Reform (Fire Safety Order) of the 2005 (Fire Safety Act 2021). This is to ensure that all of the relevant fire safety information is available for review during the buildings operational phase.

EN 1634 – Fire tests

Approved Document B recognises both EN 1634 and BS 476 Pt 20/22 as valid methods of testing for fire resistant doors.

However, for hardware to achieve a UKCA/CE mark, manufacturers must present EN 1634 fire test evidence to the notified body issuing the UKCA/CE mark. As a hardware manufacturer, our fire evidence is to EN 1634. As the European test methodology is deemed to be more onerous, EN 1634 tested hardware can be safely used on BS 476 doorsets.

Testing involves fitting hardware to a typical door construction and building the doorset into a wall that seals a furnace. Under carefully controlled circumstances, the furnace is then burned for the desired time to prove that the installation of hardware has not compromised the door leaf's ability to resist fire and so give compartmentation within a building. From the test samples and prime evidence data, an assessment report to EN 1634 is written to cover other items in the range. This gives both fire and smoke door use approval, as well as clarity on any intumescent needs, and can be used for UKCA/CE marking purposes for hinges, locks, panic & emergency units and door controls intended to be used on fire doors.

Hardware manufacturers and doorset manufacturers can work with a fire test laboratory to consolidate evidence to give an approved fire rated doorset. As well as UKCA/CE marked hardware, the doorset approval can also cover additional items such as handles and cylinders which cannot be UKCA/CE marked but are still fitted to fire doors.

certifire

Certifire

This optional accreditation scheme is another means of demonstrating fire door suitability. Within the scheme there are requirements for both individual hardware and doorsets. Unlike CE marking, the issued certificates are published online by the issuing agency for public viewing and so offers a clear summary of approval for metal and/or timber doors as well as what time frames are approved.

Certifire also makes it possible to "share" approval across hardware and doorsets. If a Certifire approved doorset has a faulty lock, the lock can be replaced with any other Certifire approved lockcase without need for a fire re-test of new doorset combination or sourcing a like-for like replacement lock.

Approved Document Part Q (ADQ)

Alongside safety, security is a significant consideration when specifying hardware and Approved Document Q contains guidance on security in new dwellings, including measures to avoid unauthorised entrance to homes and flats within a building. Covering residential doors and windows only, the document lays out requirements of complete assemblies to be installed (such as LPS 1175) and the critical hardware items that should be Kitemarked as well as recommendations on how to install them.

Kitemark (KM)

The Kitemark scheme is one of the most popular means of identifying hardware that offers a pre-determined level of security. Approval is gained by completing testing to selected British standards (that are often based on EU standards) but with additional General Vulnerability Assessment (GVA) which puts the product though a manual attack test. Annual factory audits are required alongside the annual mechanical test checks. The GVA is conducted by experts using a pre-determined toolkit and with a limited attack time. Intended to replicate an opportunistic burglary, the toolkit is limited to hand tools only and the scheme is mainly used on residential products such as front door locks (single to multipoint), cylinders, escutcheons, handles and letterplates. Compliance is shown by displaying KM logo and licence number of product and packaging.

Secured by Design
SBD
Police Preferred Specification

Secured By Design

Another optional accreditation is Secured by Design (SBD), the official police security initiative that works to improve the security of buildings and their immediate surroundings to provide safe places to live, work, shop and visit.

SBD's product-based accreditation scheme – the Police Preferred Specification - provides a recognised standard for all security products that can deter and reduce crime.

Secured by Design approval of hardware is normally further endorsement of an item's attack resistant properties based on existing testing and approvals such as a Kitemark. It should be noted that the program also offers guidance and advice on making complete buildings and spaces safe and secure which means that complete projects can be granted SBD approval, and not just the hardware within this manual.

Loss Prevention Standard (LPS) 1175

LPS 1175 is another voluntary approval scheme operated by LPCB that relates to security but instead of looking at each piece of hardware in turn, it vets an entire building component such as doorset, free standing barriers and security enclosures. The standard evaluates the intruder resistance of the assembly by subjecting it to a manual attack test.

There are a number of different grades (1-8) with severity of testing increasing as security rating level increases. The testing uses pre-determined tool kits and attack times which can be up to 20 minutes. Low security rated tool kits are limited to handheld tools while the upper security rated tool kits include power tools, carbide tips etc.

Given the intensity of the attack testing, this standard is mainly used on high security hardware fitted on secure, typically metal, doorsets. Environments for use are generally high security commercial project specifications such as Government offices, detention areas, data centres etc.

Some of the hardware within this manual have been included in successful LPS 1175 testing, but as a component of the tested system, cannot claim compliance with the standard in its own right.

EPD®

Environmental Product Declaration (EPD)

With increasing focus being given to the environmental impact of creating and maintaining buildings, it is helpful to be able to evaluate this for different hardware ranges. The EPD is a means to evaluating the impact of sourcing raw materials required, manufacturing and shipping an item. Within a construction project, the environmental impact of all hardware specified is small, but it is still important to acknowledge it.

Telephone: +44 (0) 845 223 2124
Enquiries: csdcomm@assaabloy.com
Orders: csdorders@assaabloy.com
Website: www.assaabloy.com
Webshop: Visit assaabloy.com and click Webshop

Customer support app

Featuring technical support, resource centre, live chat and video call options

Download our customer support app

The ASSA ABLOY Group is the global leader in access solutions. Every day we help people feel safe, secure and experience a more open world.

ASSA ABLOY
Opening Solutions

ASSA ABLOY Opening Solutions UK and Ireland
Door Hardware Group
School Street
Willenhall
West Midlands
WV13 3PW

Tel: +44 (0) 845 223 2124
Email: csdcomm@assaabloy.com

Web: www.assaabloy.com