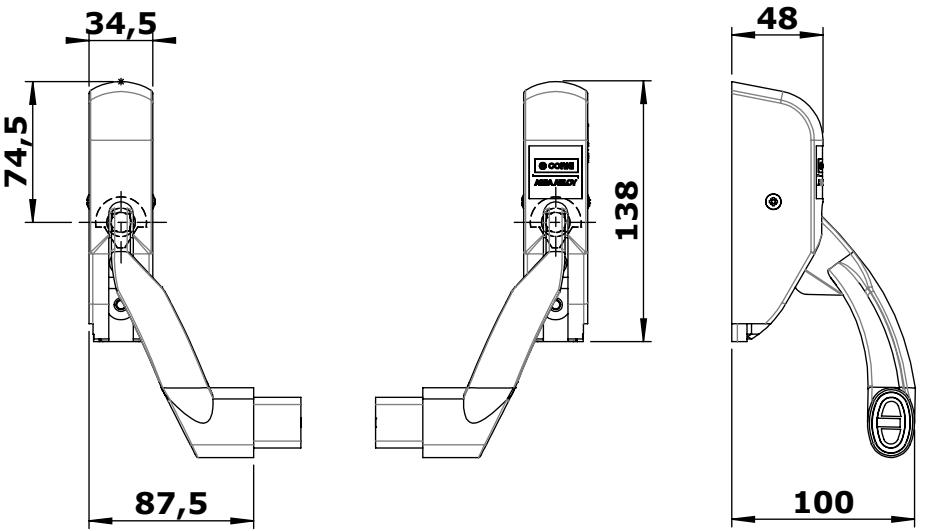

Cod.
PM160 01 00