ASSA ABLOY
Opening Solutions

Experience a safer and more open world

Electronic Security Hardware

HES | Securitron

2020 Product Catalog

Experience a safer
and more open world

HES® 5200 Electric Strike

Works with cylindrical locksets up to a 3/4" throw latchbolt

Also available in a Complete One Box Solution

The Grade 1 solution with horizontal adjustability.

The HES 5200 Series Electric Strike features an in-frame horizontal adjustable design to simplify the installation process. This feature allows the installer to easily adjust the electric strike opening to accommodate the horizontal position of the latchbolt after the strike has been installed. This field selectable fail safe/fail secure unit is easy to install and accommodates latchbolts up to 3/4" throw.

Features

Standard Features

- Tamper resistant
- Static strength 1,500 lbs
- Dynamic strength 70 ft-lbs
- Endurance 1 million cycles
- Field selectable fail safe/fail secure
- In-frame horizontal adjustment
- Non-handed
- Internally mounted solenoid
- Accommodates 5/8" – 3/4" [15.9mm – 19mm] latchbolt (3/4" [19mm] with 1/8" [3.2mm] door gap)
- Strike body depth 1-3/16" [30.2mm]
- Plug-in connector
- Trim enhancer included
- SecuriCare five-year, no-fault, no questions asked warranty *(Addition of HES SMART Pac® III extends the warranty to 10 years)*

Optional Features

- **LBM** Latchbolt monitor
- **LBSM** Latchbolt strike monitor

Accessories

- **5200-500** Filler block for retrofit applications
- **150** Strike latch guard
- **HESCUT-MTK** Metal template kit
- **2001M** Plug-in bridge rectifier
- **2004M** ElectroLynx® adapter
- **2005M3** SMART Pac® III
- **2006M** Plug-in buzzer
- **5204-1/2** 1/2" [12.7mm] stackable lip extension
- **5204-1** 1" [25.4mm] stackable lip extension
- **5204-1-1/4** 1-1/4" [31.8mm] stackable lip extension

UL CERTIFIED

Grade 1 | SecuriCare Warranty | Cylindrical Locksets | Specialty Locksets | Field Selectable (Fail secure /Fail safe) | Dual Voltage 12/24 | PoE Friendly | Burglary Rated

Specifications

Certifications

- ANSI/BHMA A156.31, Grade 1
- UL 1034 burglary-resistant listed
- UL 294 listed
- RoHS compliant

Frame Application

- Metal
- Wood

Electrical (DC Continuous Duty)

- Dual voltage 12/24 VDC/VAC
- 240 mA at 12 VDC/120 mA at 24 VDC
- PoE friendly

Dimensions

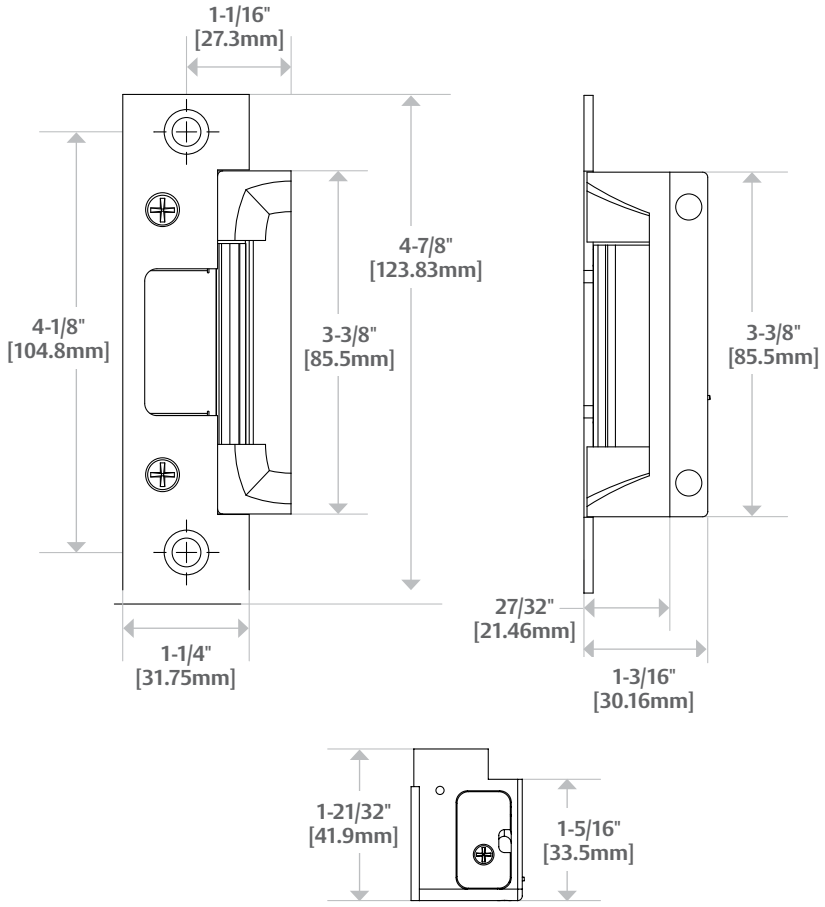

Diagram shown with 501 Option

How to Order

SERIES	MODEL	FINISH	OPTION (S)
5200	–	– 630	– LBM
5200 Universal Electric Strike; Faceplates ordered separately	**C*** Complete Electric Strike; includes the 501 and 501A faceplates	**605** Bright Brass	**LBM** Latchbolt Monitor
		606 Satin Brass	**LBSM** Latchbolt Strike Monitor
		612 Satin Bronze	
		613 Bronze Toned	
		629 Bright Stainless Steel	
		630 Satin Stainless Steel	
		BLK Black	

**Complete Pacs are only available in the 630 finish*

NOTE: Electric strike compatibility is determined at time of electric strike product release. ASSA ABLOY is not responsible for incompatibility of products that have changed in design or craftsmanship by their respective manufacturers. When compatibility is a concern, contact Customer Support for application assistance.

Copyright © 2020, Hanchett Entry Systems, Inc., an ASSA ABLOY Group company. All rights reserved. Reproduction in whole or in part without the express written permission of Hanchett Entry Systems, Inc. is prohibited.