Electric strike 142U



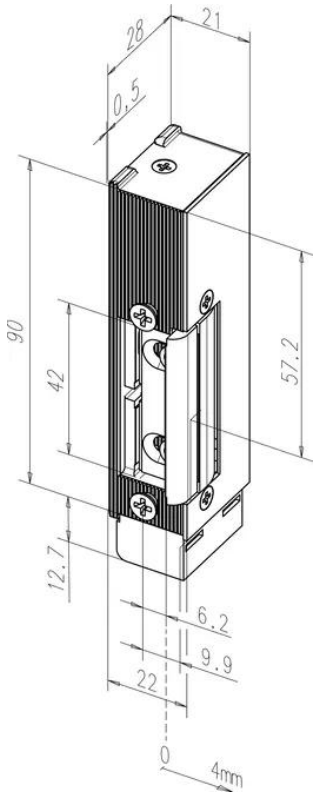

Product description

Model with basic equipment. Also useable as a heavy-duty electric strike.

Overview of Advantages

- Can switch between 12 and 24 V for AC and DC operation
- FaFix® and Fix combined
- Vertical and horizontal fitting possible
- Integrated surpressor diode

Note

- DIN right models and S models can be fitted for use in locks with minimum latch bolt spacing and also offer the possibility of directing the connecting cable away to a suitable position.

Technical data

Dimensions	Height: 103 mm , Width: 21 mm , Depth: 28 mm
Version	Fire rated strike
Latch version	Standard latch
Mounting	asymmetrical
Installation position	universal
Voltage	12-24 V
With fixing	No
Waterproof	No
Mounting method	Installation
Type of current	AC/DC
How they work	Fail-locked
Pulse contact	Yes
Adjustable electric strike – Fix	Yes
Adjustable strike plate	No
Latch bolt guide integrated – Profix	No
For strike plates with latch bolt guide	No
Unlocking type	Standard version
Permanent operation (100% power-on time)	Yes
Mechanical unlocking	No
Suitable for smoke protection door	Yes
Use category according to EN 14846	3
Endurance according to EN 14846	X
Mass of the door, closing force in accordance with EN 14846	5
Suitable for fire/smoke protection doors according to EN 14846	D
Environmental condition according to EN 14846	0
Security – Burglary protection against entry in accordance with EN 14846	0
Protection against electrical manipulation in accordance with EN 14846	1
Nominal resistance 12 V	58 Ohm
Max. latch preload AC	50 N
Min. preload AC	40 N
Max. latch preload DC	20 N
Min. preload DC	10 N
Latch adjustment range	4 mm
max. current consumption AC	130 mA
Max. current consumption DC	210 mA
Continuous duty	11-26 V
Load cycles for in-plant test	250000
Changeable connection	No
Clampable/ plug-in connection	No
Mechanical noise damping	No
Drill hole offset by 1 mm	No
Unlock period	0.8 s
Nominal operating voltage tolerance	+ - 1 V
Nominal resistance 24 V	230 Ohm

ASSA ABLOY Sicherheitstechnik GmbH
Bildstockstraße 20, 72458 Albstadt
Tel. + 49 7431/123-0, Albstadt@assaabloy.com
www.assaabloy.com/de

Electric strike 142U

Operating temperature range	-15-40 °C
Certified in compliance with	EN 14846
Suitable for fire door	Yes
TVS diode	Yes
With feedback signal	No
Adjustable keeper- FaFix	Yes
Mechanical stability (no burglary resistance)	6500 N
Protective effect of electrical function in accordance with EN 14846	0

Variants that can be ordered

Order number	Description
142U--------Q34	Without strike plate, 12 - 24 V AC/DC eE, DIN left
142U--------Q35	Without strike plate, 12/24 V AC/DC eE, DIN right

ASSA ABLOY Sicherheitstechnik GmbH
Bildstockstraße 20, 72458 Albstadt
Tel. + 49 7431/123-0, Albstadt@assaabloy.com
www.assaabloy.com/de