Electric strike 118FRR



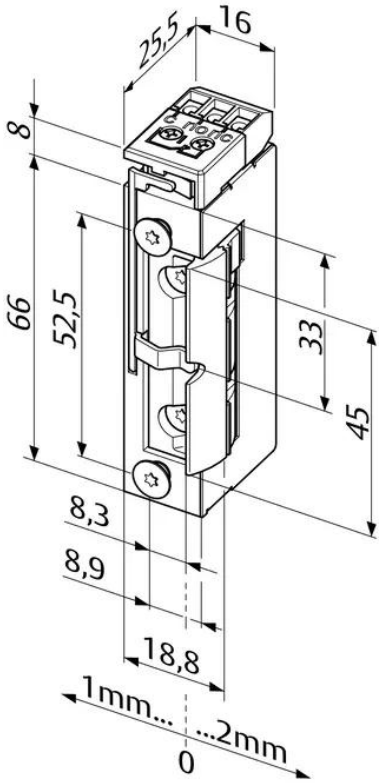

Product description

Model with monitoring contact as potential-free changeover contact, actuated using a lever on the latch bolt. Suitable for fire rated doors.

Also useable as a heavy-duty electric strike.

Overview of Advantages

- Radius keeper, FaFix®, adjustable by 3 mm
- FaFix® latch adjustable in 0.5 mm increments
- Voltage range
- Symmetrical design. DIN left/right as well as horizontal applicable
- Bipolar diode

Technical data

Dimensions	Width: 16 mm , Depth: 25.5 mm , Height: 74 mm
Version	Fire rated strike
Latch version	Radius keeper
Mounting	symmetrical
Installation position	universal
With fixing	No
Opening direction according to DIN	left/right
Waterproof	No
Mounting method	Installation
Type of current	AC/DC
How they work	Fail-locked
Pulse contact	Yes
Adjustable keeper- FaFix	Yes
Adjustable electric strike – Fix	No
Adjustable strike plate	No
Latch bolt guide integrated – Profix	No
For strike plates with latch bolt guide	No
Unlocking type	Standard version
Permanent operation (100% power-on time)	Yes
Mechanical unlocking	No
Suitable for smoke protection door	Yes
Forend shape	without
Use category according to EN 14846	3
Endurance according to EN 14846	X
Mass of the door, closing force in accordance with EN 14846	5
Suitable for fire/smoke protection doors according to EN 14846	A
Environmental condition according to EN 14846	0
Security – Burglary protection against entry in accordance with EN 14846	0
Protection against electrical manipulation in accordance with EN 14846	3
Mechanical stability (no burglary resistance)	9000 N
Max. latch preload AC	350 N
Min. preload AC	200 N
Max. latch preload DC	200 N
Min. preload DC	50 N
Latch adjustment range	3 mm
Load cycles for in-plant test	250000
Changeable connection	No
Mechanical noise damping	No
Drill hole offset by 1 mm	No
Unlock period	0.8 s
Operating temperature range	-15-40 °C
Certified in compliance with	EN 14846; VDS
Suitable for fire door	Yes
TVS diode	Yes
With feedback signal	Yes

ASSA ABLOY Sicherheitstechnik GmbH
Bildstockstraße 20, 72458 Albstadt
Tel. + 49 7431/123-0, Albstadt@assaabloy.com
www.assaabloy.com/de

Electric strike 118FRR

Contact load capacity monitoring contact	1 A
Protective effect of electrical function in accordance with EN 14846	1

Variants that can be ordered

Order number	Description
118FRR------A71	Without striking plate, 12-24V AC/DC
118FRR------B71	Without striking plate, 22-42 V AC/DC

ASSA ABLOY Sicherheitstechnik GmbH
Bildstockstraße 20, 72458 Albstadt
Tel. + 49 7431/123-0, Albstadt@assaabloy.com
www.assaabloy.com/de