# Electric strike 118F



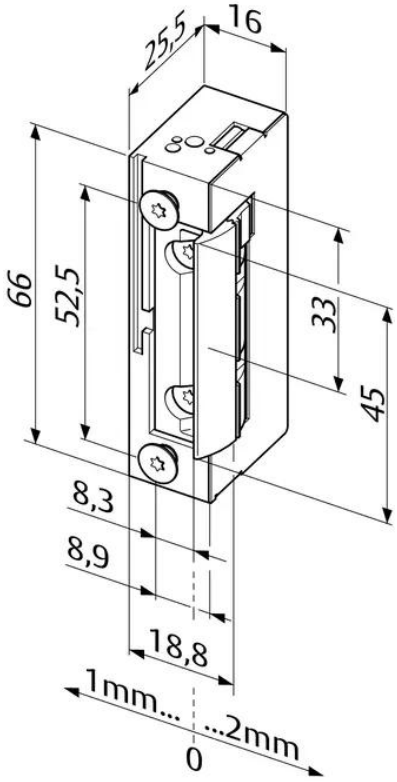


## Product description

Model with basic equipment. Suitable for fire rated doors.

Also useable as a heavy-duty electric strike.

## Overview of Advantages

- Radius keeper, FaFix®, adjustable by 3 mm
- FaFix® latch adjustable in 0.5 mm increments
- Voltage range
- Symmetrical design. DIN left/right as well as horizontal applicable
- Bipolar diode

## Technical data

| | |
|---|---|
| Dimensions | Width: 16 mm , Depth: 25.5 mm , Height: 66 mm |
| Version | Fire rated strike |
| Latch version | Radius keeper |
| Mounting | symmetrical |
| Installation position | universal |
| With fixing | No |
| Opening direction according to DIN | left/right |
| Waterproof | No |
| Mounting method | Installation |
| Type of current | AC/DC |
| How they work | Fail-locked |
| Pulse contact | Yes |
| Adjustable keeper- FaFix | Yes |
| Adjustable electric strike – Fix | No |
| Adjustable strike plate | No |
| Latch bolt guide integrated – Profix | No |
| For strike plates with latch bolt guide | No |
| Unlocking type | Standard version |
| Permanent operation (100% power-on time) | Yes |
| Mechanical unlocking | No |
| Suitable for smoke protection door | Yes |
| Forend shape | without |
| Use category according to EN 14846 | 3 |
| Endurance according to EN 14846 | X |
| Mass of the door, closing force in accordance with EN 14846 | 5 |
| Suitable for fire/smoke protection doors according to EN 14846 | A |
| Environmental condition according to EN 14846 | 0 |
| Security – Burglary protection against entry in accordance with EN 14846 | 0 |
| Protection against electrical manipulation in accordance with EN 14846 | 3 |
| Mechanical stability (no burglary resistance) | 9000 N |
| Max. latch preload AC | 350 N |
| Min. preload AC | 200 N |
| Max. latch preload DC | 200 N |
| Min. preload DC | 50 N |
| Latch adjustment range | 3 mm |
| Load cycles for in-plant test | 250000 |
| Changeable connection | No |
| Mechanical noise damping | No |
| Drill hole offset by 1 mm | No |
| Unlock period | 0.8 s |
| Operating temperature range | -15-40 °C |
| Certified in compliance with | EN 14846; VDS |
| Suitable for fire door | Yes |
| TVS diode | Yes |
| With feedback signal | No |
| Protective effect of electrical function in accordance with EN 14846 | 0 |

ASSA ABLOY Sicherheitstechnik GmbH
Bildstockstraße 20, 72458 Albstadt
Tel. + 49 7431/123-0, Albstadt@assaabloy.com
www.assaabloy.com/de

# Electric strike 118F

## Variants that can be ordered

| Order number | Description |
|---|---|
| 118F--------A71 | Without striking plate, 12-24V AC/DC |
| 118F--------B71 | Without striking plate, 22-42 V AC/DC |

ASSA ABLOY Sicherheitstechnik GmbH
Bildstockstraße 20, 72458 Albstadt
Tel. + 49 7431/123-0, Albstadt@assaabloy.com
www.assaabloy.com/de