ASSA ABLOY

APOGEO PED 200 Series Rim Panic Exit Device

Design, versatility and ease of installation



Experience a safer
and more open world

Designed for easy installation

The APOGEO PED 200 is the latest range of ASSA ABLOY Panic Exit Devices, featuring a durable steel tube activation mechanism. The new rim-type model extends our offering to include both mortise and rim solutions. Fully CE-certified and suitable for fire doors, it also holds the N mark issued by AENOR, ensuring both high quality and superior performance. The optimized mechanism enhances system efficiency and reduces opening force requirements.

The APOGEO PED 200 stands out with its modern aesthetics, following the ASSA ABLOY design guidelines with sleek, geometric lines. Its installation is simplified thanks to the following features:

- **Easy reversibility for adaptable use.**
- **Base plate installation,** which accurately defines the panic exit device's position and serves as a guide for mounting.
- **Adjustable to door dimensions:**
  - The steel tube can be cut and installed after the main and auxiliary mechanisms are in place, reducing the risk of damage during construction work.
  - The vertical rods can be shortened to fit various door heights, both in exposed and covered configurations.
  - Flexible configurations to meet diverse customer needs and door specifications

Installation in 4 steps!

Define the hand

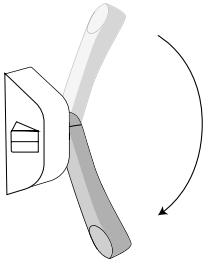

Install the main and auxiliary mechanism

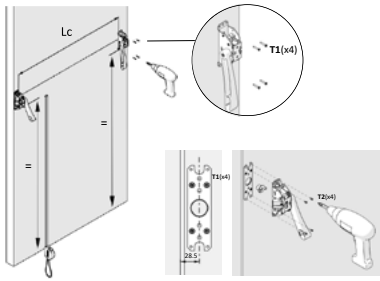

Height and width adjustment

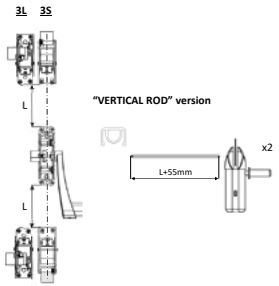

Install the tube

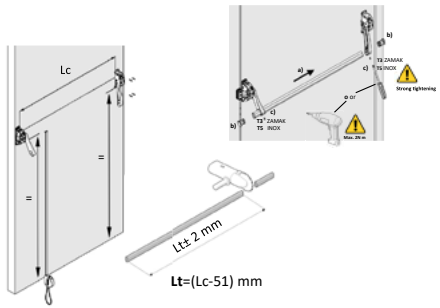

Ideal for retrofitting

The APOGEO PED 200 is designed to facilitate direct retrofitting of most existing models on the market.

In cases where adjustments are needed, installation remains simple and straightforward.



Functional features and door compatibility

The APOGEO PED 200 panic bar is certified for fire doors and meets EN1125 standards certified for the following groups

3 7 6 B 1 3 2 2 A A

- 0099/CPR/A44/0161

Key features include:

- Low opening forces for smooth operation
- 8 mm follower for universal compatibility
- Reversible design for flexible installation
- Compact support structure for narrow doors
- Customizable lengths with cut-to-size options
- Microswitch integration available
- Suitable for both single and double-leaf doors
- Optional dogging device for added convenience

Configuration on the door

APOGEO PED 200 1 POINT

Single leaf door



Double leaf door



APOGEO PED 200 2 POINT

Single leaf door

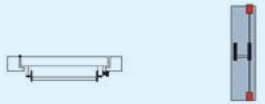

Double leaf door

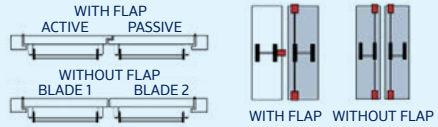

APOGEO PED 200 3 POINT

Single leaf door

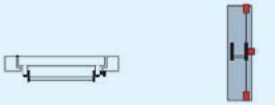

Double leaf door

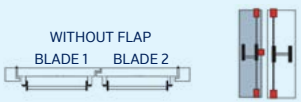

APOGEO PED 200 3 POINT

Single leaf door

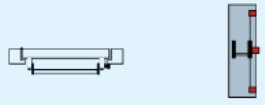

Double leaf door



Customizable to any application

This Panic Exit Device is **available in a variety of sizes, finishes, and accessories, ensuring seamless integration** with any door type or environment.

- **Four types of strike plates** (adjustable and fixed)
- **Certified vertical rod sets** for high doors
- **Glass door installation kits,** with or without external operation
- **Compact cover dimensions** for doors with narrow stiles
- **Antimicrobial finish option,** eliminating 95% of common bacteria in healthcare environments

Model	Tube length (mm)	Follower (mm)	Cover/Arms	Tube finish
APOGEO PED 200	775	8	Grey	Grey AM
	1075		Black	Black
			Titanium	Red
			White	Green
			Satín	Titanium AM
			Stainless Steel	White AM
				Stainless Steel AM

Dimensions

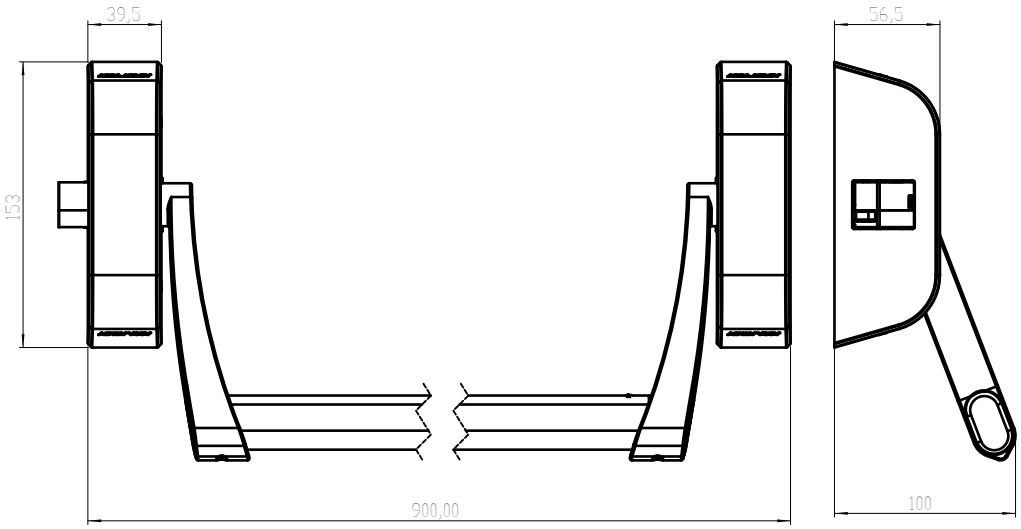

Aesthetic and functional design

ASSA ABLOY has carefully designed the APOGEO PED 200 to blend aesthetics with functionality, meeting modern architectural trends with clean, straight lines.

- Ergonomic cover design for a sleek appearance (Figure 1)
- Optimized tube geometry to maximize pushing force efficiency (Figure 2)
- Integrated CE marking on the cover, with certification details discreetly placed inside
- Modular platform concept, combining mortise and rim solutions for double-leaf doors





Explore our full range
on our website.

ASSA ABLOY
Opening Solutions Middle East
P.O. Box 37765
National Industries Park,
Mina Jebel Ali Dubai,
United Arab Emirates
Tel: +971 4 880 4888

assaabloy.com/ae

Experience a safer
and more open world

ASSA ABLOY